PLASTIC ELECTRONIC PRODUCTS

电子电脑精密零件
固扣件专业设计制造厂

品基 品固

2025
44th

PINGOOD

IATF 16949 | ISO 9001 | ISO 14001 | QC080000

共同设计开发制造、共同设计服务制造 JDVM, JDSM

PINGOOD ENTERPRISE CO., LTD.
NO.8, ALLEY 1, LANE 768, SEC.4 PATEH RD., TAIPEI 115027, TAIWAN
TEL: 886-2-27885767 FAX: 886-2-27885768 http://www.pingood.com.tw

品基电子(东莞)有限公司
FACTORY:DONGGUAN,CHINA

苏州品基电子科技有限公司
FACTORY: SUZHOU,CHINA

品固企业股份有限公司 台北公司
OFFICE:TAIPEI,TAIWAN

品固企业股份有限公司 中坜工厂
FACTORY: ZHONGLI,TAIWAN

公司简介

公司名称:品基电子(东莞)有限公司
(苏州品基,品固企业)
设立时间:1982年6月15日 (成立44年)
资本额 :港币278,000,00元
地址 :广东省东莞市塘厦镇果岭路1号
电话 : 86-769-87910231
传真 : 86-769-87910232
部门分类:业务部,研发部,财务部,生管部,模具制造部,品管部,MIS部门,ERP部门,总经理室,厂务部,资材部

Company Profile

Company: PINGOOD Enterprise Co., Ltd.
Founded: June 15 th, 1982.
(44 th Anniversary)
Capital: US$4,200,000.00
Address: No.1, GUO LING RD.,TANG XIA, DONGGUAN,GUANGDONG, CHINA
Telephone: 86-769-87910231
FAX :86-769-87910232
Department: Sales&Marketing,R&D, Finance, Production, Molding, Q.C, MIS,

台北公司面积： 2800 平方公尺
中坜工厂面积： 16000 平方公尺
中坜工厂地址:桃园市中坜区东园路21号
品基东莞工厂面积： 36000 平方公尺
模具厂面积：800 平方公尺
品基东莞工厂地址： 广东省东莞市塘厦镇果岭路1号
苏州品基工厂面积： 12000平方公尺
苏州品基工厂地址： 江苏省苏州市吴中区横泾街道天鹅荡路2986号
设备： 射出成型机，CNC放电加工机，CNC线割机，CNC综合加工机...etc.
实验室仪器： 3D影像量测仪，X-Ray光谱仪，气相色谱质谱联用仪，环境实验机，影像量测仪，显微镜投影机，绘图机，万能破坏机，高阻抗测试机，拉力机，自动测试机...etc.
国内主要客户： 各大股票上市上柜之电脑电子产品制造厂及相关产品制造商.
国外主要客户：DELL，HITACHI，SONY，HP，SHARP，...etc.
海外行销： 本公司海外行销遍及五大洲
产品认证： UL
公司认证： ISO9001, IATF 16949
工厂认证： ISO9001，ISO14001, QC080000，IATF 16949

***所有尺寸及规格均以本公司之产品承认书为主，目录尺寸仅供参考**
*目录产品未标示单位皆采 mm 公制单位
*如有其他颜色需求,欢迎来电询问
*目录建议装配方式，仅供参考
*目录之包装数量，仅供参考
*标示“NEW”，“★”为新产品
*欢迎各界大鉴不吝来电赐教，本公司定当竭诚为您服务
***发行日期：** 2024年12月31日

Taipei ,Taiwan office: 2,800 m²
Company Owned Factory :
Zhungli Dist,Taiwan : 16,000 m²
Dongguan ,China : 36,000 m²
Mold Factory Area: 800 m²
Suzhou ,China : 12,000 m²
Facilities: In-house Design, In-house tool shop, Injection line
Sales Territory: Worldwide
Certificate: UL, ISO9001, ISO14001, QC080000, IATF 16949

This catalogue is only subsidiary for your reference; all the measurments and dimensions are according to the "DATA SHEET" issued by PINGOOD.
*All measures are in metric unit of "mm"scale except noted.
If you have other color reguest, Kindly feel free to contant with US.
Catalogue assembly methods for reference only.
Catalogue package amounts for reference only.
*The marking " NEW " , " ★ " appearing on a new product.
*Detailed information will be provided upon request, please kindly contact us for the best customer service, information is available via email at pingood@pingood.com.tw.
Issue Date: Dec.31 , 2024

Our Strengths

We Can Offer fast services, efficient solution and High standard of reliable Quality.

Product:
More than 10,000 SKUs standard ready parts, Specialized in Custom parts as well.

Manufacture:
In-house total solution from Design & tooling to mass production to offer appropriate delivery.

Upgrade Facilities:
To meet compact design trend of small size product, Our mission to Provide the best equipment fulfill the customer's request.

Marketing support:
General Catalogue, E-catalogue; Resource website: High visibility on sourcing from PINGOOD website.

www.pingood.com.tw

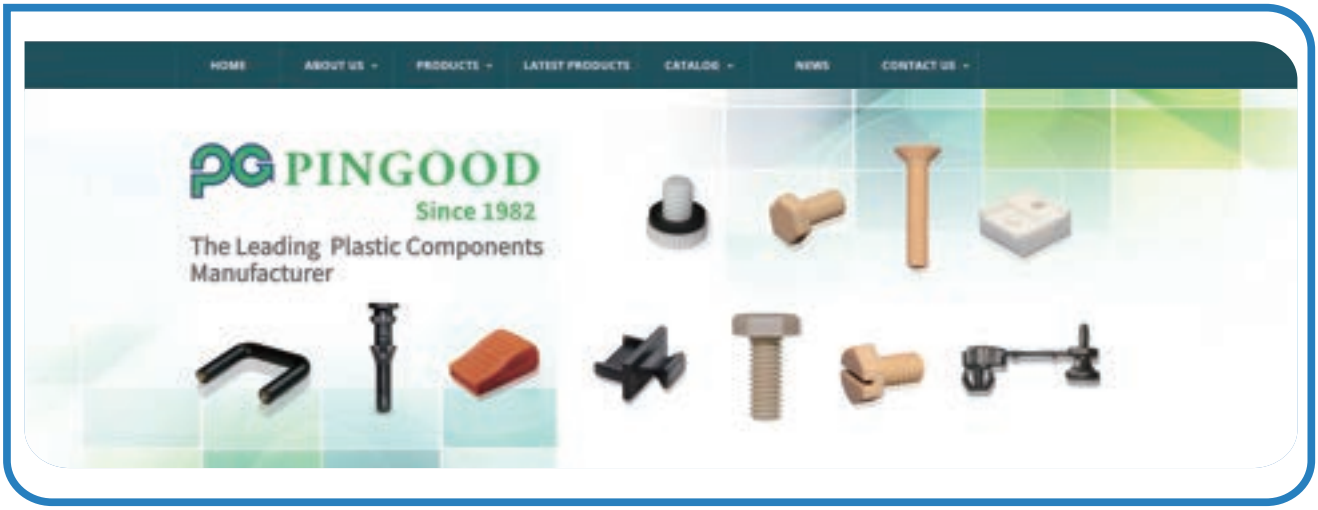

品固企业环境管理物质沿革

自2006年起，本公司所有产品已全面导入符合欧盟RoHS指令的要求，环保检测实验室亦同时成立.

2009年起，因应国际绿色组织提出卤素化合物对于人体及环境具有潜在危害的诉求，开始导入无卤素(Halogen Free, HF)产品.

2009年起，欧盟REACH法规公布，开始与供应商合作调查产品中化学成分，确保产品中不含REACH法规中所规范的高关注物质(Substance of Very High Concern, SVHC).

2010年，鉴于国际间关注非洲地区所开采之冲突矿产(锡、金、钽、钨)于电子电机产品中的使用状况，品固企业产品中并不含上述成分，亦要求供应商需于材料承认阶段，即承诺产品中不可使用冲突矿产.

ISO9001品质管理系统政策:

全员参与、客户满意、员工高兴、永续经营

品固企业致力于品质持续改善的过程，以符合ISO 9001品质管理系统之需求，为此目标我们必须提供最优等的产品和服务品质，来实现海内外广大客户群品质满意的保证.

ISO14001环境管理系统政策:

节省能源减少废弃物、减低污染回收再利用

环境保护是品固企业身为地球公民一份子的重要责任.品固企业向其所有员工、客户及社会大众承诺，每一管理运作均以可靠的、符合环境保护的方式进行.制程中所产生的各项污染、废弃物的预防及减低，以及资源回收再利用，是我们对环境保护持续改善的主要方向.

QC 080000产品无有害物质管理系统政策:

符合法规预防污染、绿色采购持续改善

面对当前全球环境保护趋势及各项环境保护法令之持续要求，品固企业持续以最新的技术及不间断之管理制度，善尽地球环境保护的一份心力，为社会及企业永续经营而努力，品固企业在设计初期便将环境管理物质纳入设计规划重点，严格要求供应链提供的原物料必须遵守国际相关环保法规，以及品固企业订定的环境管理物质技术标准以及管制内容.

IATF 16949国际汽车品质管理系统:

客户满意、持续改善、预防生产、降低风险

确保品固展现对品质的承诺，达到持续性的改善，并以经济高效的方式为客户提供更优质的产品和服务，从产品设计、开发、生产到组装，以达到汽车工业严格的品质检验标准.

品固企业对碳排放减量之承诺

品固企业深知气候变迁是因人类活动产生大量温室气体，造成了地球温度的上升，做为地球公民的一份子，必须要善尽社会责任!

建立有效的碳/温室气体排放量的盘查，从减碳思维更进一步提升整体作业流程，每年可以省35万度的电力，在生产的过程中减少175.7公吨的碳排放，对厂内制程进行碳管理.

品固企业推动碳/温室气体减量及改善计划，持续对环境保护尽一份心力，以提供环保、减碳的绿色产品给广大的海内外客户.

品固企业从2013推行节能至今，推动太阳能发电，对地球环保尽一份责任.

Milestone of Green procurement of sources

2006 Meet RoHS Compliant.

2009 Meet REACH Requirement & Implement to Halogen Free products.

2010 Commit not to use conflict minerals.

ISO9001 Quality Management System

We continue following the most effective quality management system to have continuous improvements in the quality of our product & service to achieve our domestic and global customers' satisfaction.

ISO14001 Environmental Management System

Environmental Protection is all our responsibilities. PINGOOD has also adopted the internal controls to have ISO 14001 compliance from the resources and production processes to meet energy saving, reduction in waste and consumption of resources and minimize the impact to the environmental for a long term viability of businesses.

QC 080000 Hazardous Substance Process Management System

Today, we are facing the ongoing global environmental protection requirements. PINGOOD has implemented with the latest technology and continuous improvement management system to meet the environmental friendly from the design phase, material from the supply chains, to mass production all comply with the updated global environmental regulations.

IATF 16949 International Automobile Quality Management System

Our stream-line solution from design to mass production are qualified the high standard quality control in automotive industry supply chain.

Carbon footprint Verification

In 2013, PINGOOD has conducted effective carbon/GHG emission verification to further enhance overall production process flow to reduce carbon emissions and done the extra environmental protection efforts toward a long term business goal.

各项证书
Certificate

产品开发 Product Development

Customer proposal ▶ Design Discuss Evaluation ▶ Drawing ▶ Customer confirmation ▶ Mockup ▶ Making mold ▶ Injection molding ▶ Verification acceptance

Sales and Marketing Division

Sales and Marketing Division

R&D Division

R&D Division

3D Printer

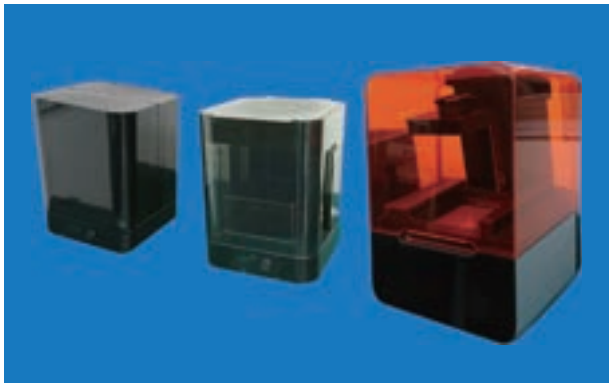

3D Printer

3D Printer Sample

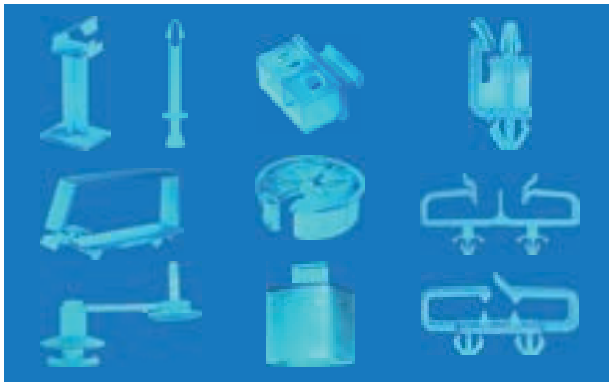

3D Printer Sample

模具部 Molding Division

CNC Machining

FANUC CNC Machining

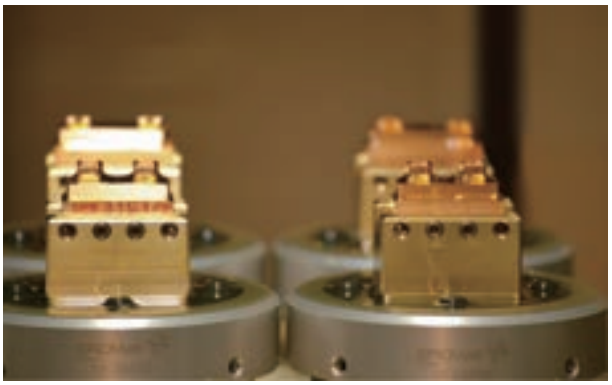

EROWA EDM SINKING SYS

Sodick CNC Electric Discharge Machine

Seibu Slow Wire Cutting Machine

Seibu Slow Wire Cutting Machine

Metal Cutting Machine

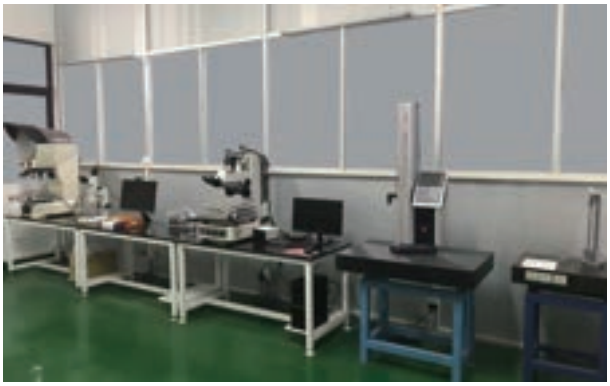

Mold Inspection Room

成型部 Injection Division

Injection Division

Japan TOYO Fully Electric Injection Molding Machine

Japan TOYO Fully Electric Injection Molding Machine

Japan TOYO Fully Electric Injection Molding Machine

Japan TOYO Fully Electric Injection Molding Machine

Vertical Injection Molding Machine

Robotic Arm for Injection Molding Machine

RHCM Machine

实验室仪器 Laboratory Equipment

Tensile Test Equipment

Flame Test Equipment

Colorimeter

Programmable Temperature and Humidity Chamber

Image Dimension Measurement System

2.5D Non-Contact Video Measuring System

Life Cycle Test Machine

Digimatic Height Gage

Melt Flow Indexer

Rockwell Type Hardness Equipment

Constant Speed and Force Equipment

Micro-vu 3D Measuring System

RoHS laboratory (GC-MS) Analysis Process

Scraping the sample and weighing ▶ Rotate Evaporator ▶ Add Solvent Extraction ▶ Purification of filtered sample ▶ GC-MS: To examine the content of organic solvents (PBB、PBDE、 Phthalates)





RoHS laboratory (X-Ray) Inspection Process

Sample ▶ Homogeneous Material ▶ HITACHI EA1000AIII X-Ray examine sample meets RoHS、As、Sb。

In order to fulfill the responsibility for environmental protection, the environmental friendly substances are tested and checked.
The HITACHI EA1000A III X-ray Fluorescence Analyzer: Meet the EU RoHS Directive and the rapid detection and analysis of hazardous substances in electrical and electronic product, e.g.: Cd、Pb、Hg、Cr、Br、As、Sb, etc. Complying with Halogen free requirement, we use XRF (X-ray Fluorescence Spectrometer) to analysis the content to meet customer requirement. GC-MS (Gas chromatography–mass spectrometry) for the detection of PBB, PBDE, Phthalates in organic solvents.

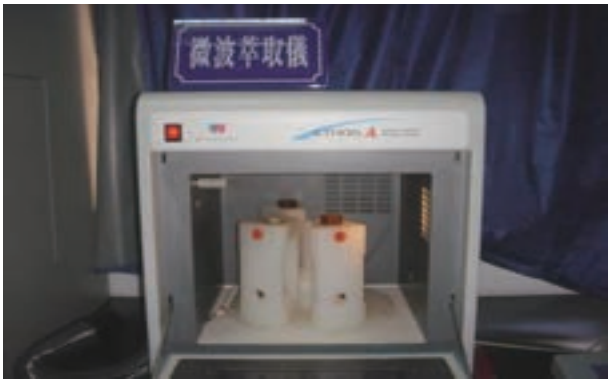

Microwave Extracted Device


Microwave Extracted Device

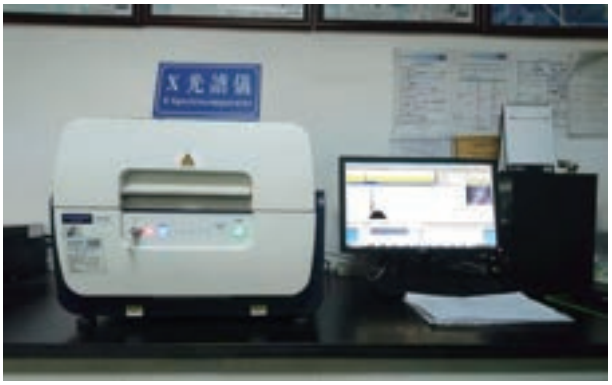
HITACHI EA1000A III X-ray Fluorescence Analyzer


GC-MS (Gas chromatography–mass spectrometry)

检查包装 Check Packaging

Verification Products

Automatic Packaging Machine

Auto Assembly Machine

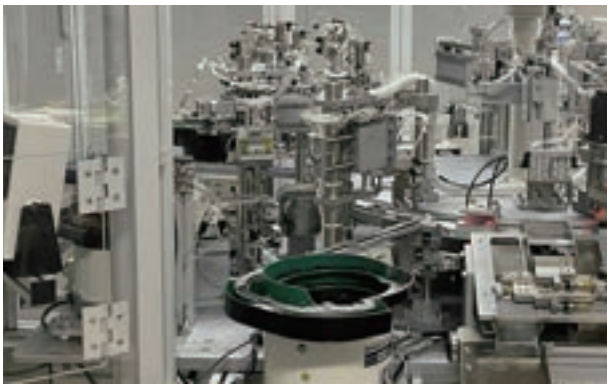

Auto Assembly Machine

Auto Optical Inspection Machine

Auto Optical Inspection Machine

Automated Storage & Retrieval System

客户对我们的肯定与鼓励
Appreciation and Encouragement from Customers

专利
Patent

* 以上已完成商标注册续展证明

PINGOOD

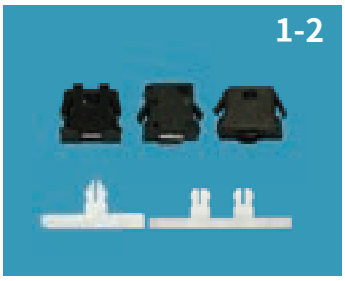
1-2


1-3

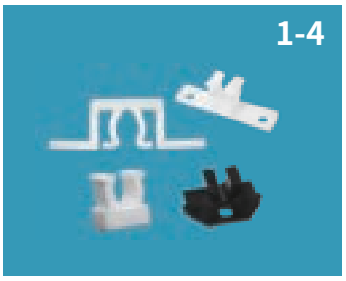
1-4


1-5


1-6


1-7


1-8

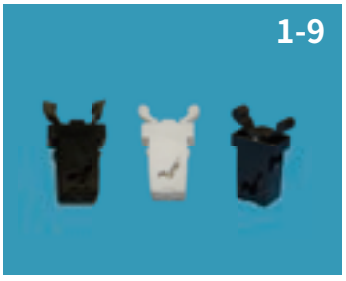
1-9


1-10


1-11


1-12


1-13


1-14


1-15

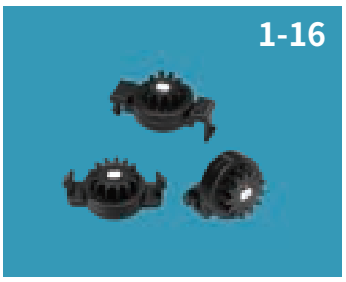
1-16


1-17


1-18


1-19


1-20


1-21


1-22


1-23


1-24


1-25


1-26


1-27


1-28


1-29

门扣，阻尼器，导光棒 LATCH, DAMPER, LIGHT PIPE

PINGOOD

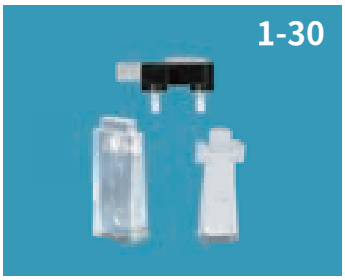
1-30


1-31

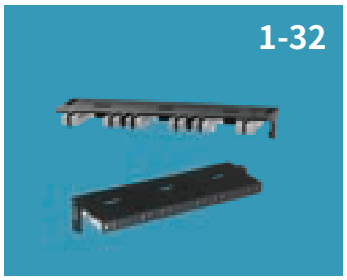
1-32


1-33


1-34

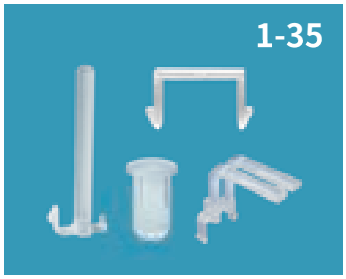
1-35

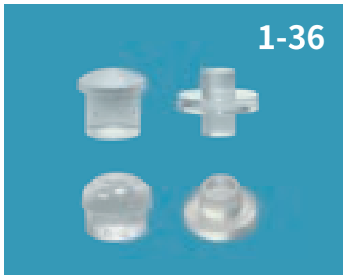
1-36


1-37


1-38


1-39


1-40

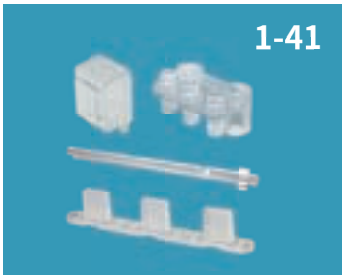
1-41

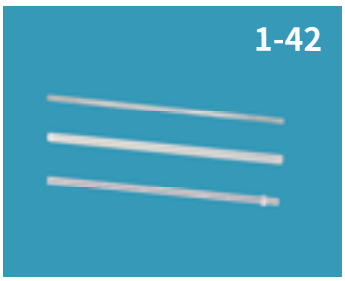
1-42

热情服务，转变观念
增强知识，迎接挑战

线扣，护线环，塞环 BUSHING,SNAP BUSHING

PINGOOD


2-2


2-3


2-4


2-5


2-6


2-7


2-8


2-9

线扣，护线环，塞环 BUSHING,SNAP BUSHING

PINGOOD

2-10

2-11

2-12

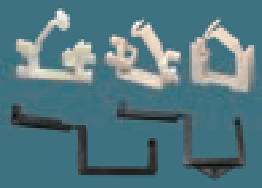

2-13

2-14

2-15

2-16

2-17

2-18

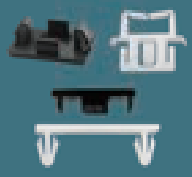

2-19

2-20

2-21

2-22

2-23

2-24

2-25

2-26

2-27

2-28

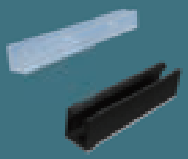

响应环保
减碳计划

P.C. 板间隔柱 SPACER SUPPORT

PINGOOD

3-2

3-3

3-4

3-5

P.C. 板间隔柱 SPACER SUPPORT

PINGOOD

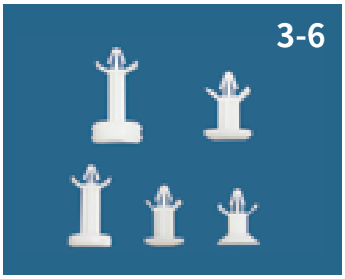

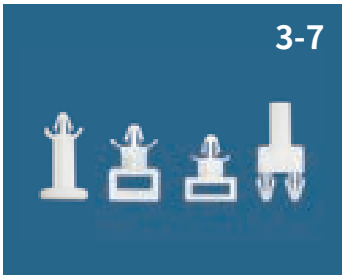

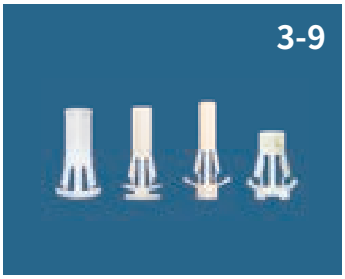

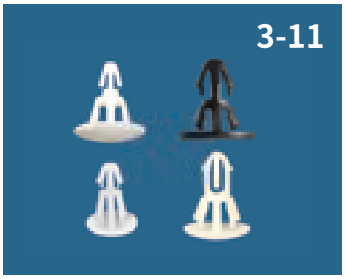

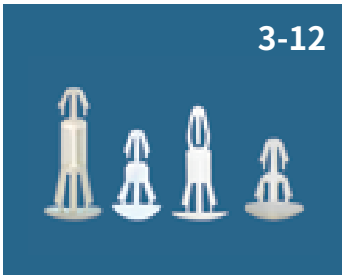

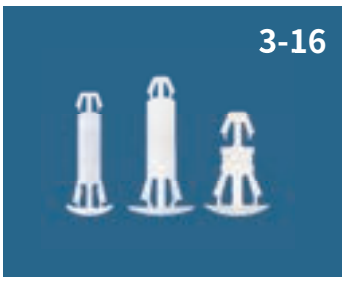

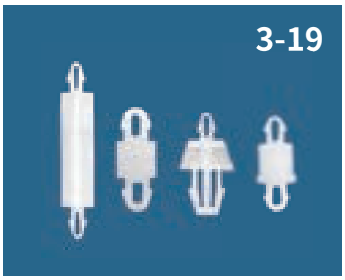

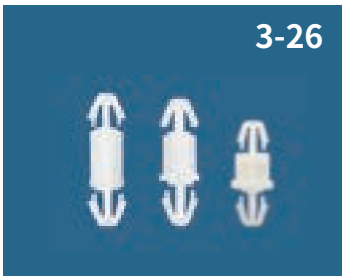

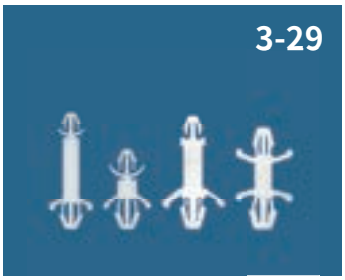

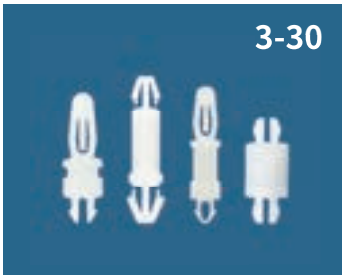

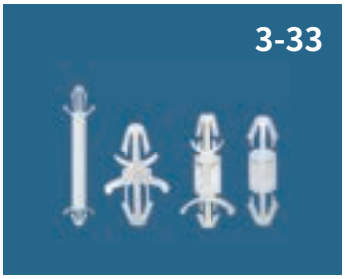

P.C. 板间隔柱 SPACER SUPPORT

PINGOOD

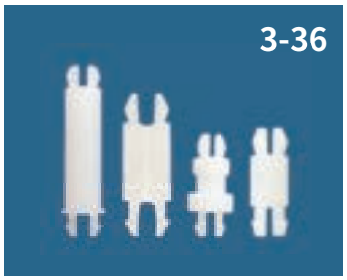

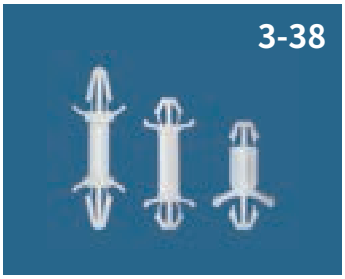

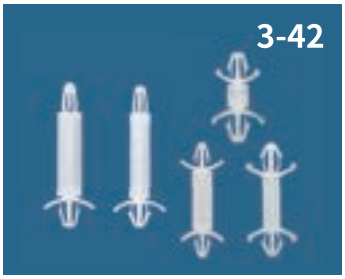

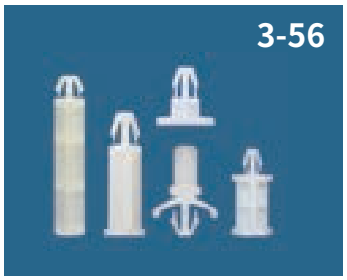

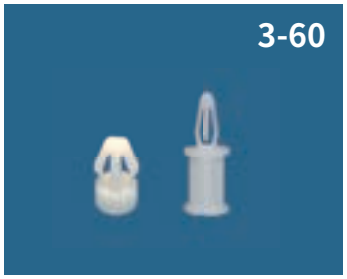

P.C. 板间隔柱 SPACER SUPPORT

PINGOOD

3-62

3-63

3-64

3-65

3-66

3-67

3-68

3-69

3-70

3-71

3-72

3-73

3-74

3-75

3-76

3-77

3-78

3-79

3-80

3-81

3-82

3-83

3-84

3-85

3-86

3-87

3-88

3-89

P.C. 板间隔柱 SPACER SUPPORT

PINGOOD


3-90


3-91


3-92

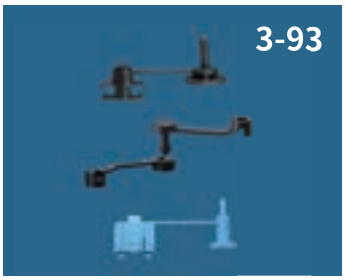
3-93


3-94


3-95


3-96

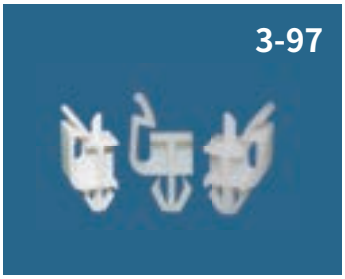
3-97


3-98


3-99

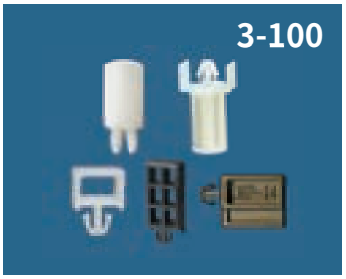
3-100


3-101


3-102


3-103


3-104


3-105

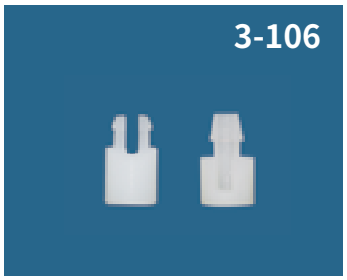
3-106


3-107


3-108


3-109

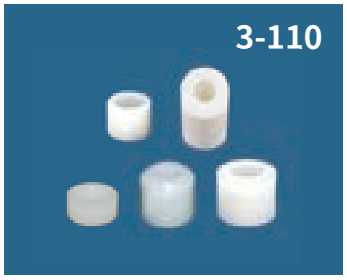
3-110


3-111


3-112

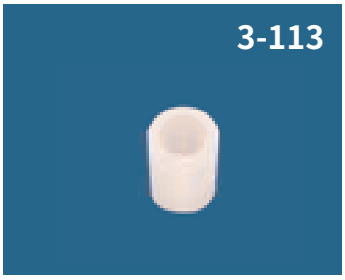
3-113


3-114


3-115

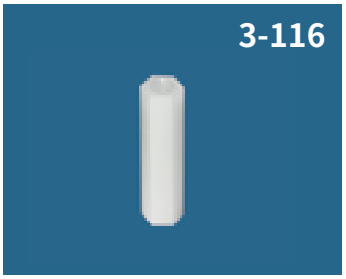
3-116

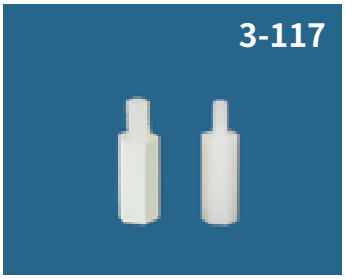
3-117

P.C. 板间隔柱 SPACER SUPPORT

PINGOOD


3-118


3-119

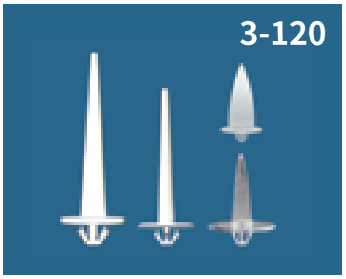
3-120

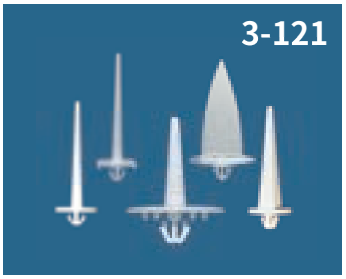
3-121

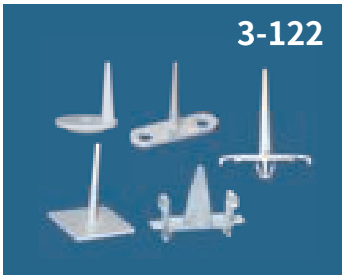
3-122


3-123

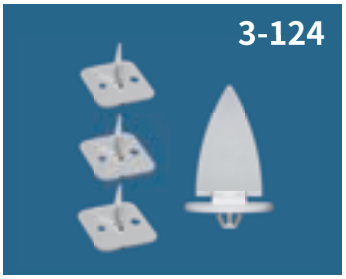
3-124

需求万变
努力不变

LED 套 ,LED 座 LED HOLDER, LED, HOUSING

PINGOOD

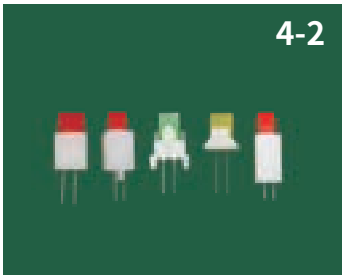
4-2

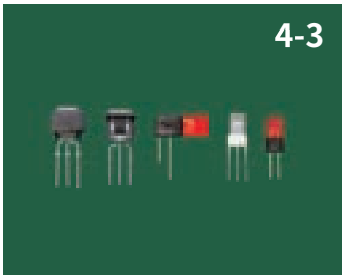
4-3

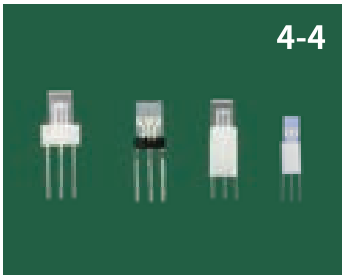
4-4

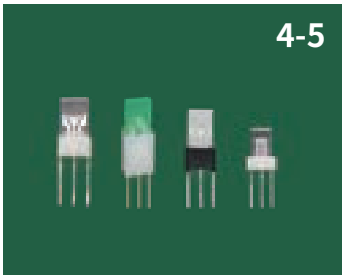
4-5

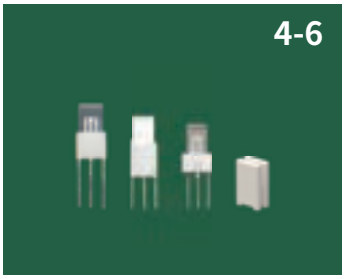
4-6

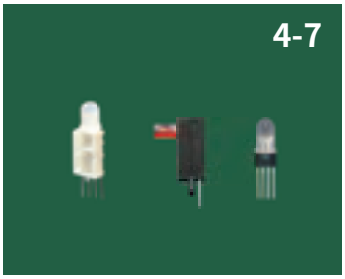
4-7

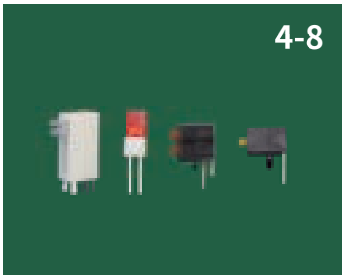
4-8

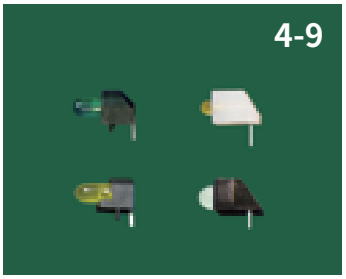
4-9

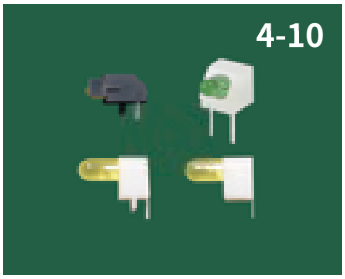
4-10

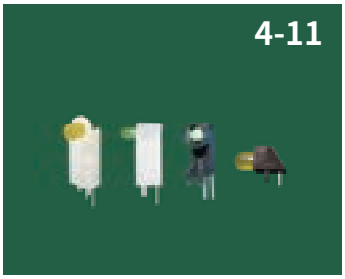
4-11

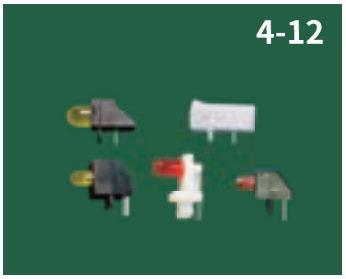
4-12

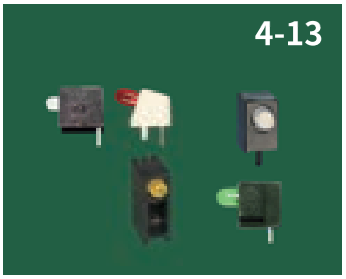
4-13


4-14


4-15

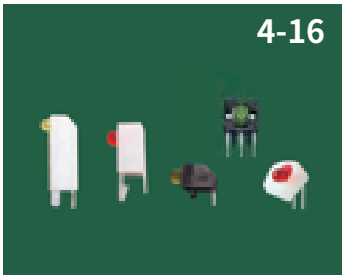
4-16

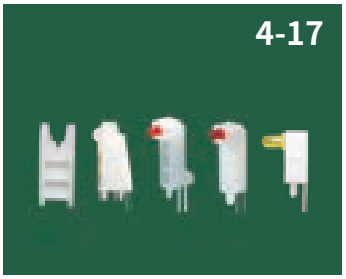
4-17

PINGOOD

4-18
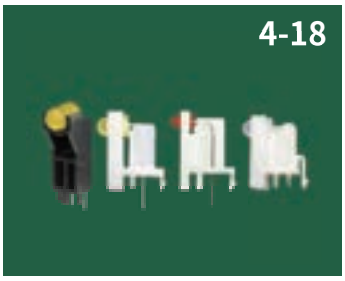

4-19
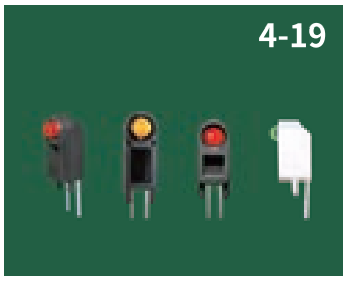

4-20


4-21
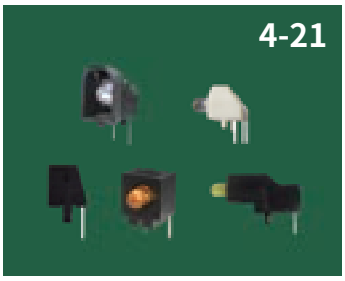

4-22
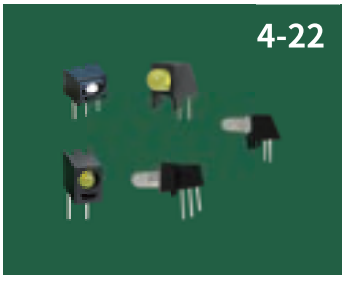

4-23
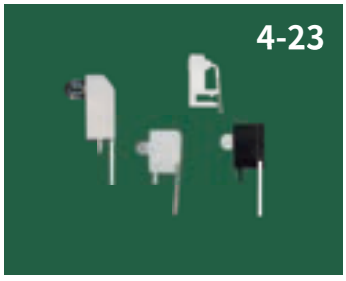

4-24
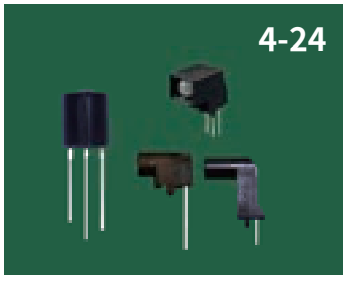

4-25
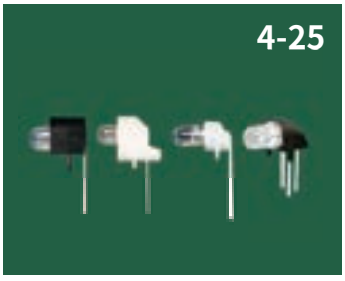

4-26
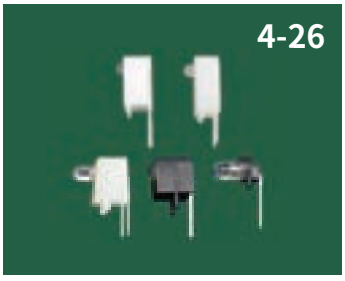

4-27
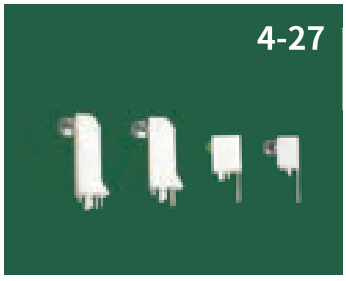

4-28
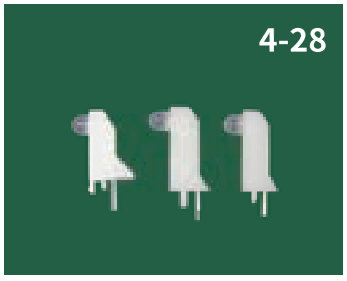

4-29
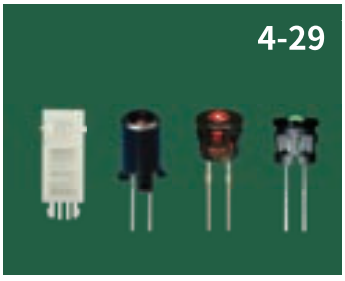

4-30


4-31


4-32
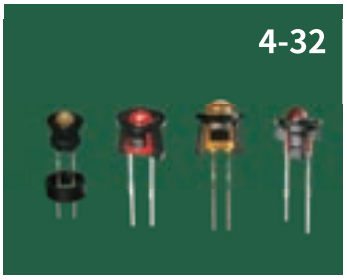

4-33
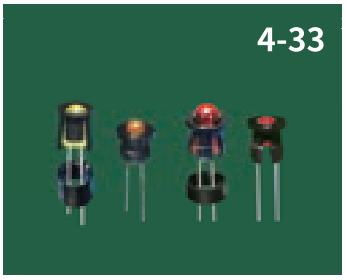

4-34


4-35
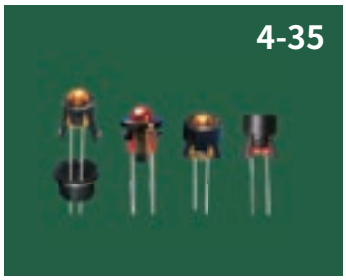

4-36


4-37
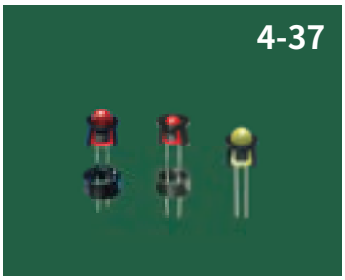

4-38


4-39
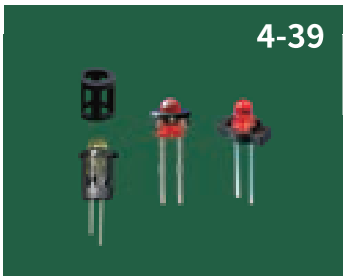

4-40
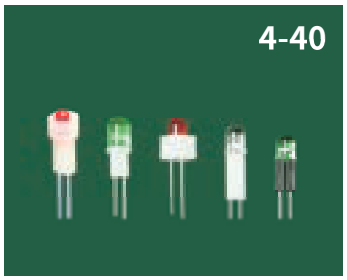

4-41
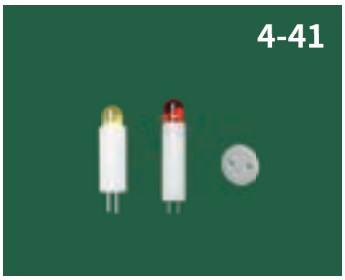

4-42
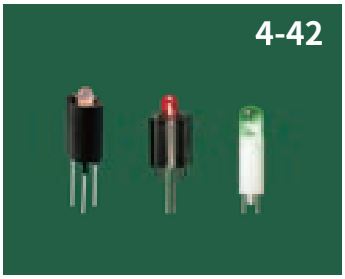

4-43
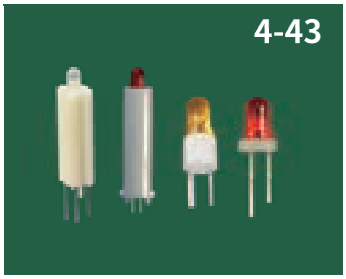

4-44
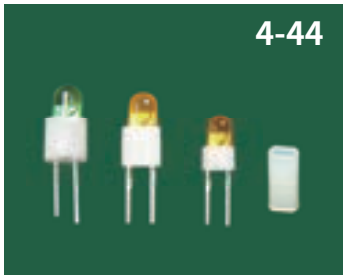

4-45
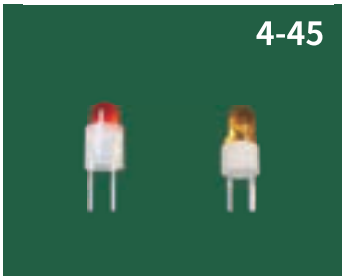

LED 套 ,LED 座 LED HOLDER, LED, HOUSING

PINGOOD

4-46

4-47

4-48

4-49

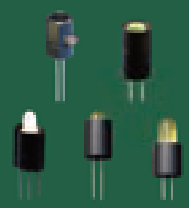

4-50

4-51

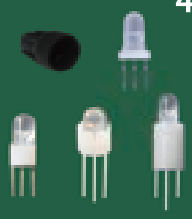

4-52

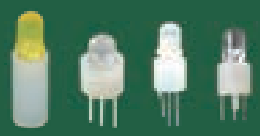

4-53

4-54

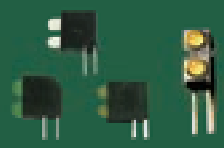

4-55

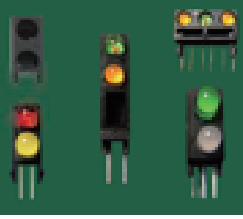

4-56

4-57

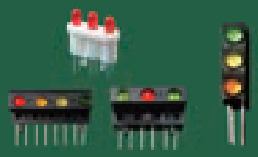

4-58

4-59

4-60

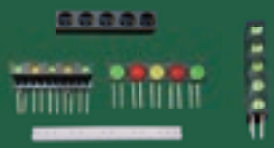

4-61

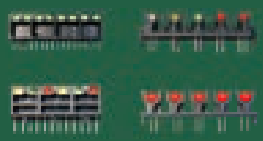

4-62

勤思巧干苦攀
风逆我自昂扬

铆钉，螺丝，螺帽，扣具 PLASTIC FASTENER

PINGOOD

5-2

5-3

5-4

5-5

PINGOOD

5-6

5-7

5-8

5-9

5-10

5-11

5-12

5-13

5-14

5-15

5-16

5-17

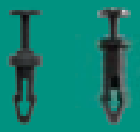

5-18

5-19

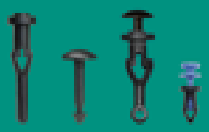

5-20

5-21

5-22

5-23

5-24

5-25

5-26

5-27

5-28

5-29

5-30

5-31

5-32

5-33

PINGOOD

5-34


5-35
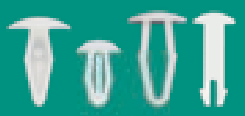

5-36


5-37


5-38


5-39
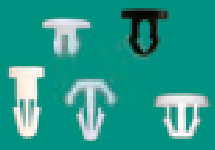

5-40


5-41


5-42


5-43


5-44


5-45


5-46


5-47


5-48


5-49


5-50


5-51


5-52


5-53


5-54


5-55
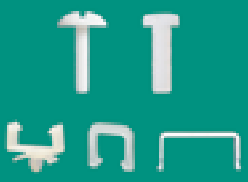

5-56


5-57


5-58


5-59


5-60


5-61


铆钉，螺丝，螺帽，扣具 PLASTIC FASTENER

PINGOOD

5-62

5-63

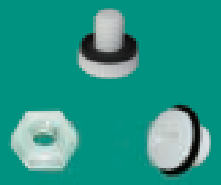

5-64

求实创新
贴心服务

线材固定，线材隔离 CABLE CLAMP,SADDLE

PINGOOD

6-2

6-3

6-4

6-5

6-6

6-7

6-8

6-9

6-10

6-11

6-12

6-13

6-14

6-15

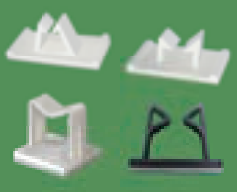

6-16

6-17

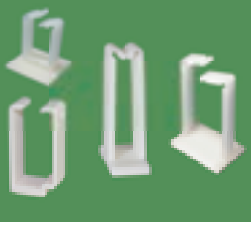

6-18

6-19

6-20

6-21

线材固定，线材隔离 CABLE CLAMP,SADDLE

PINGOOD

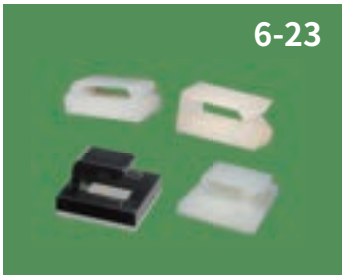

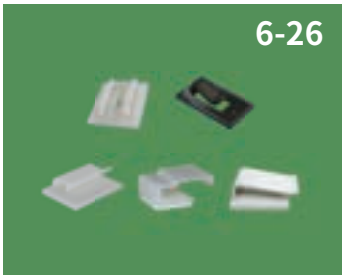

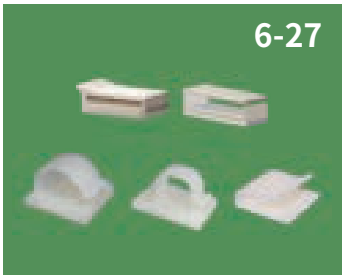

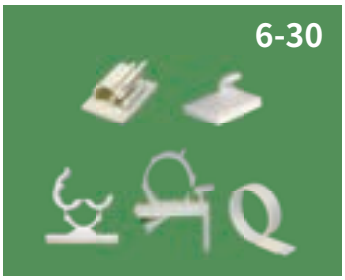

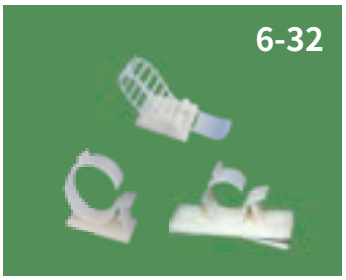

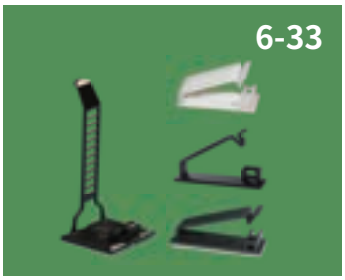

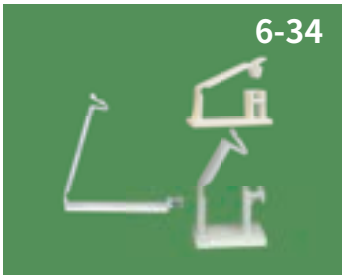

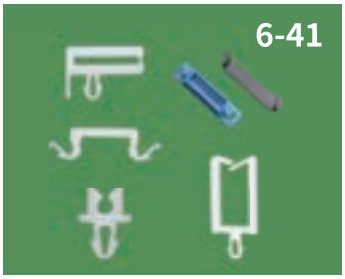

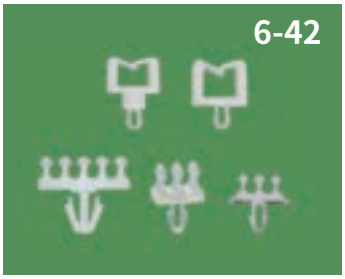

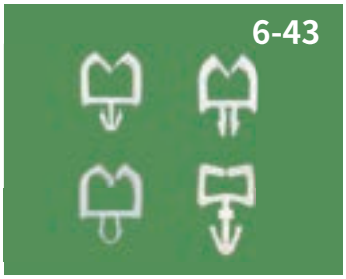

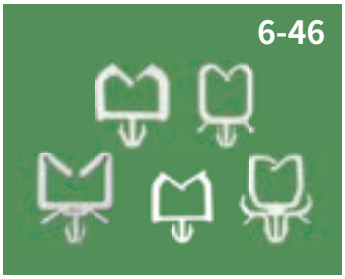

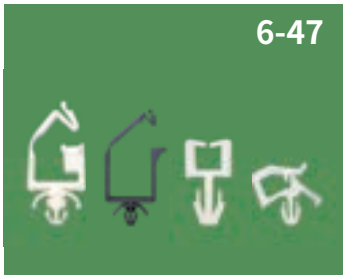

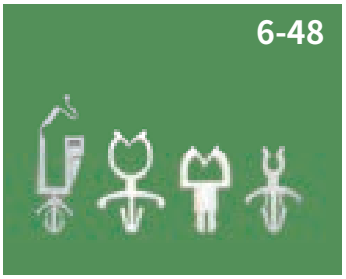

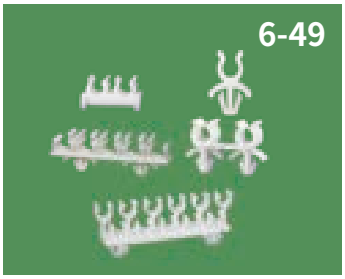

线材固定，线材隔离 CABLE CLAMP,SADDLE

PINGOOD

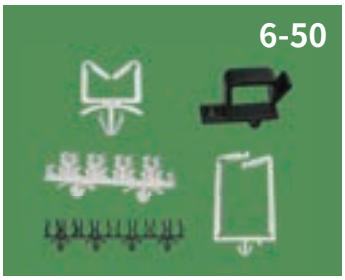
6-50

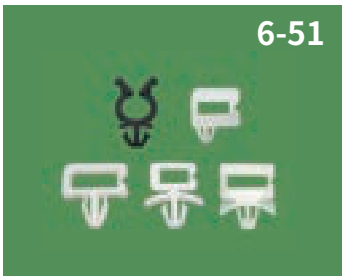
6-51

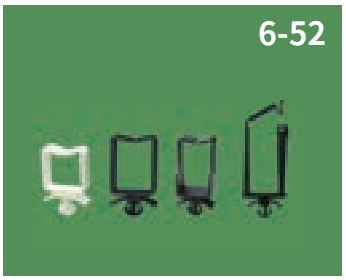
6-52

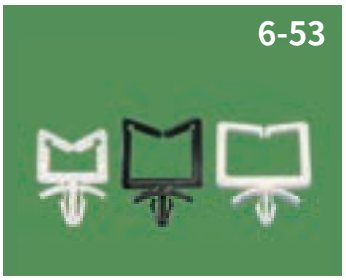
6-53

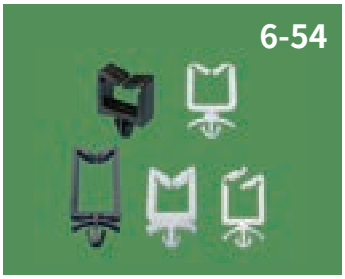
6-54


6-55

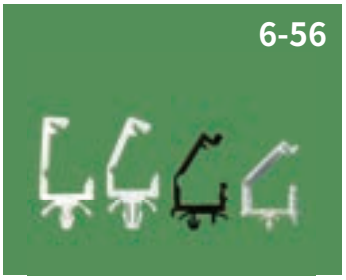
6-56


6-57


6-58

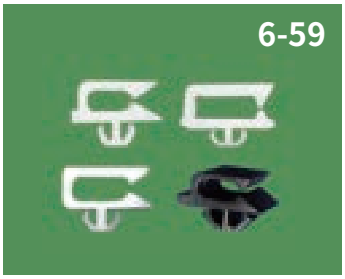
6-59

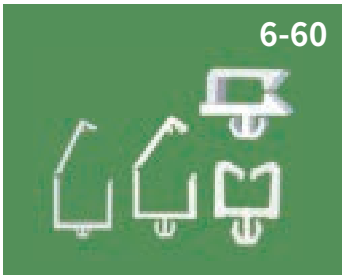
6-60

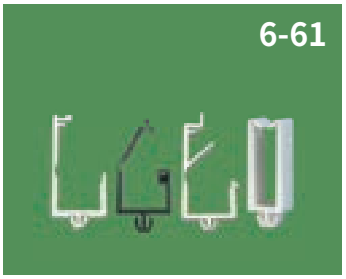
6-61


6-62

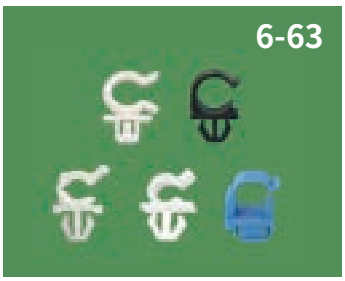
6-63

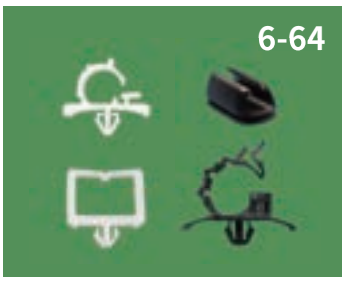
6-64


6-65


6-66

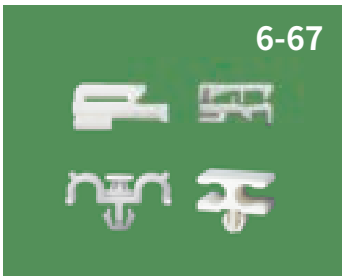
6-67

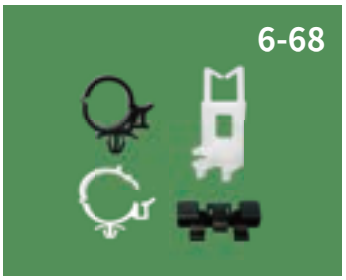
6-68

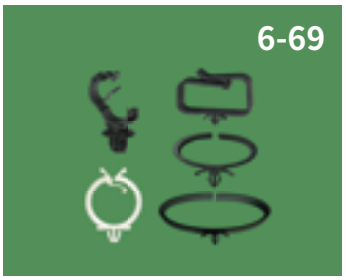
6-69

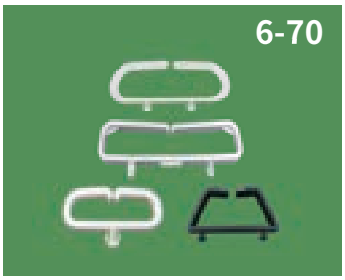
6-70


6-71

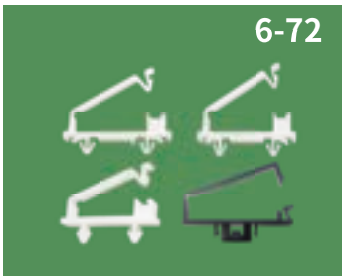
6-72

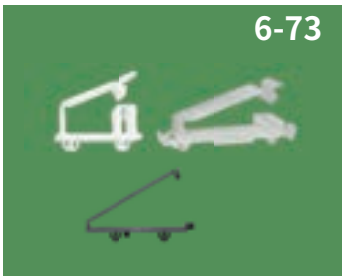
6-73


6-74


6-75

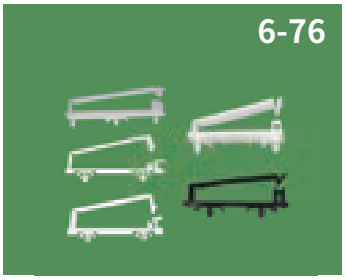
6-76


6-77

线材固定，线材隔离 CABLE CLAMP,SADDLE

PINGOOD

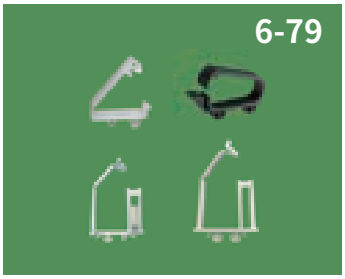

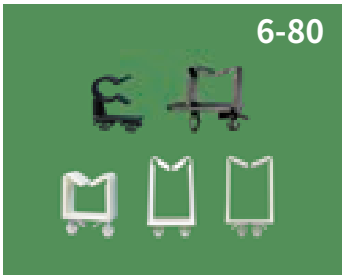

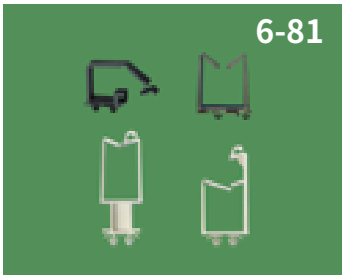

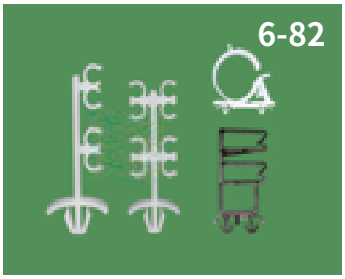

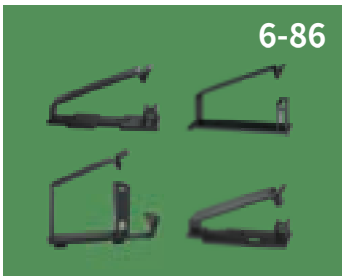

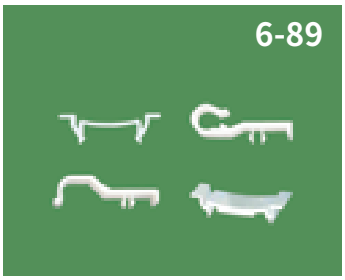

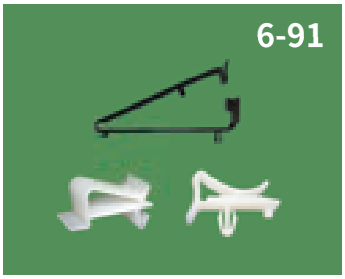

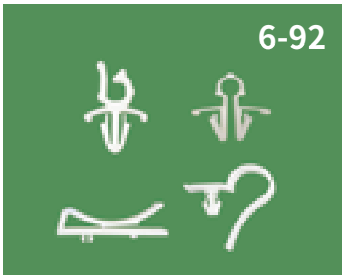

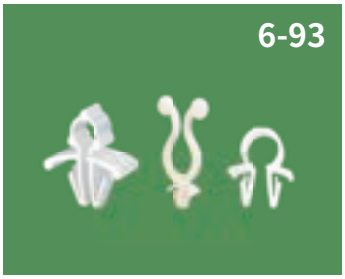

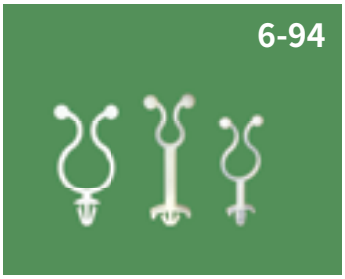

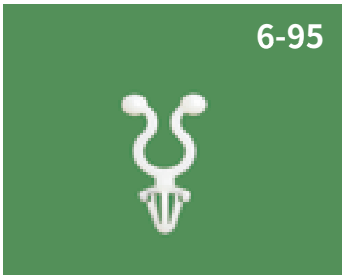

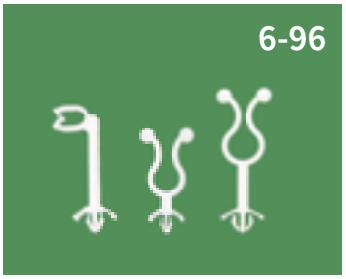

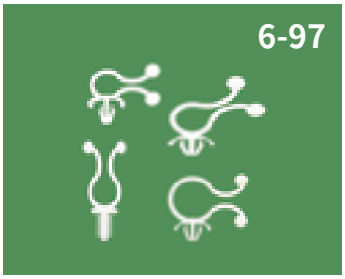

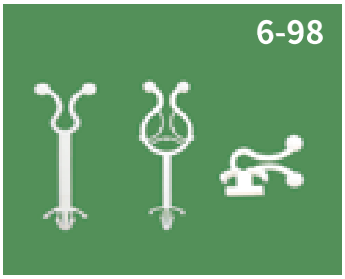

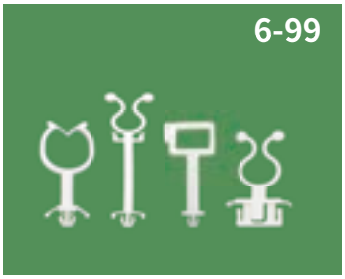

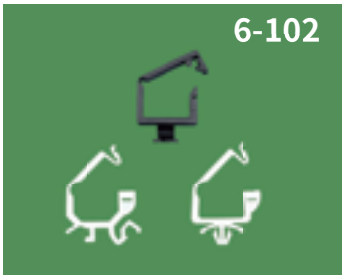

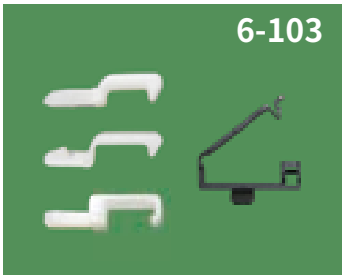

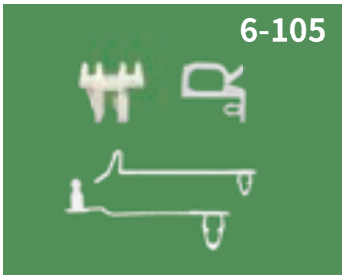

线材固定，线材隔离 CABLE CLAMP,SADDLE

PINGOOD

6-106

6-107

6-108

6-109

6-110

6-111

6-112

6-113

6-114

6-115

6-116

6-117

6-118

6-119

6-120

6-121

6-122

6-123

6-124

6-125

6-126

6-127

6-128

6-129

6-130

6-131

6-132

6-133

线材固定，线材隔离 CABLE CLAMP,SADDLE

PINGOOD

6-134

6-135

6-136

6-137

6-138

6-139

6-140

EMI 扣 SLEEVE FERRITE CLAMP

PINGOOD

7-2

电子零附件 PCB ASSEMBLY COMPONENTS

PINGOOD

8-2

8-3

8-4

8-5

8-6

8-7

8-8

8-9

PINGOOD

8-10


8-11


8-12


8-13


8-14


8-15


8-16


8-17
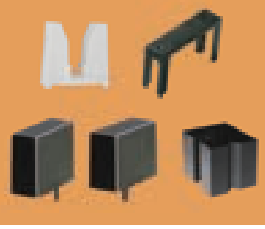

8-18


8-19


8-20


8-21


8-22


8-23


8-24


8-25


8-26


8-27


8-28


8-29


8-30


8-31


8-32


8-33


8-34


8-35


8-36


8-37


PINGOOD


8-38


8-39


8-40


8-41


8-42


8-43


8-44


8-45


8-46


8-47


8-48


8-49


8-50


8-51

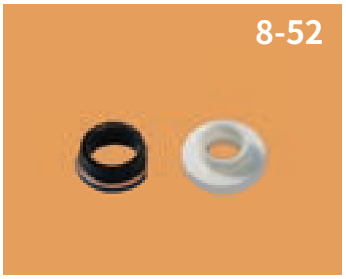
8-52


8-53


8-54


8-55


8-56


8-57


8-58


8-59


8-60


8-61


8-62


8-63


8-64


8-65

电子零附件 PCB ASSEMBLY COMPONENTS

PINGOOD


8-66

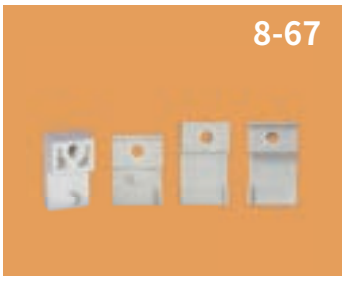
8-67


8-68


8-69


8-70


8-71


8-72

追求卓越
掌握先机

脚垫，烫金脚垫，垫座 PLASTIC RUBBER FOOT

PINGOOD


9-2


9-3


9-4


9-5

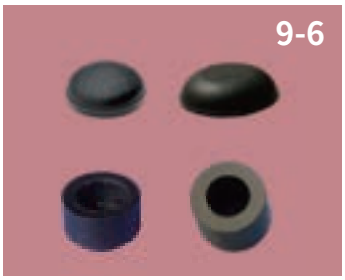
9-6

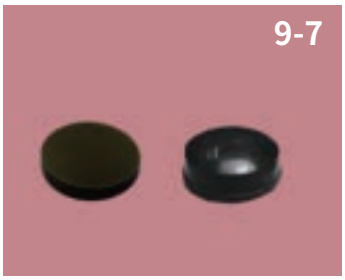
9-7


9-8


9-9


9-10

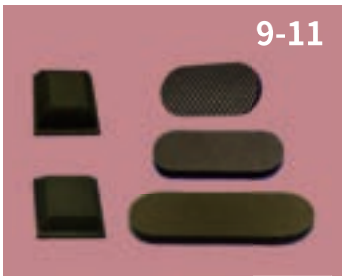
9-11


9-12


9-13

卓越的效能，优质的团队
顶尖的创意，专业的服务

拉柄 CIRCUIT BOARD EJECTOR

PINGOOD

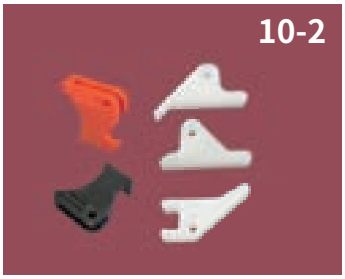

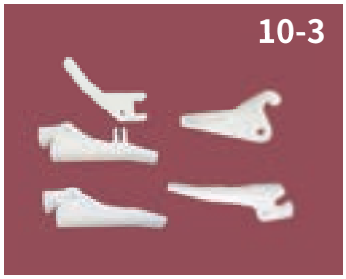

导槽 P.C.B GUIDE RAIL

PINGOOD

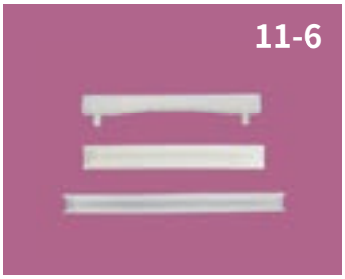

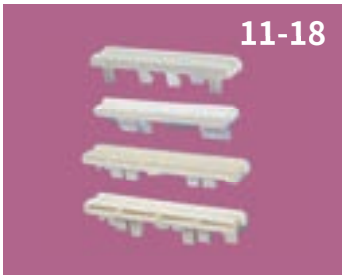

PINGOOD

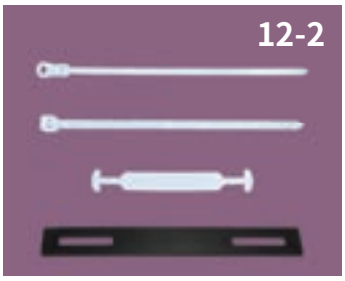
12-2


12-3


12-4


12-5

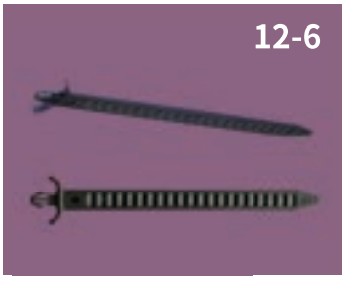
12-6

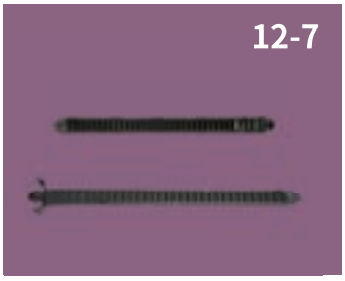
12-7


12-8


12-9


12-10


12-11


12-12


12-13


12-14


12-15


12-16


12-17


12-18

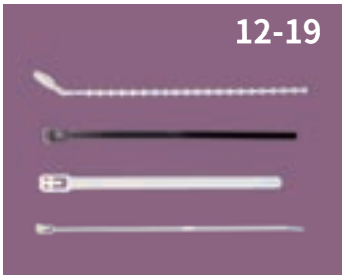
12-19

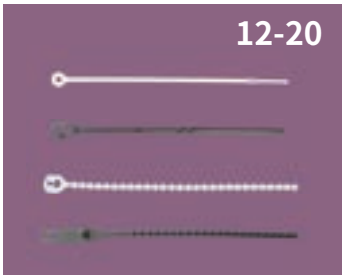
12-20

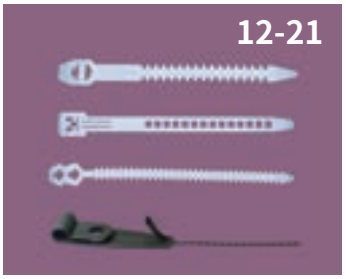
12-21

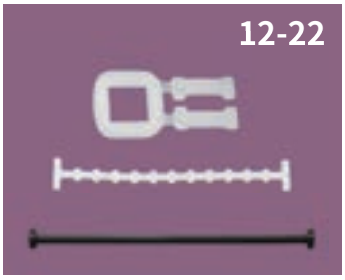
12-22

用心创新，竞争发展
培育员工，创造团队

企业的成功来自于每一位员工的付出
信誉为本、服务是根、扶掖人才、敬业荣群

其他塑胶制品 HANDLE,HOUSING,COVER

PINGOOD


13-2


13-3


13-4


13-5


13-6


13-7


13-8


13-9


13-10


13-11


13-12


13-13


13-14


13-15


13-16


13-17


13-18


13-19


13-20


13-21


13-22


13-23


13-24


13-25


13-26


13-27


13-28


13-29

PINGOOD


13-30


13-31


13-32


13-33


13-34


13-35


13-36


13-37


13-38


13-39


13-40


13-41


13-42


13-43


13-44


13-45


13-46


13-47


13-48


13-49


13-50


13-51


13-52


13-53


13-54


13-55


13-56


13-57

PINGOOD


13-58


13-59


13-60


13-61


13-62


13-63


13-64


13-65


13-66


13-67


13-68


13-69


13-70


13-71


13-72


13-73


13-74


13-75


13-76


13-77


13-78


13-79


13-80


13-81


13-82


13-83


13-84


13-85

其他塑胶制品 HANDLE,HOUSING,COVER

PINGOOD


13-86


13-87


13-88


13-89


13-90


13-91


13-92


13-93


13-94


13-95

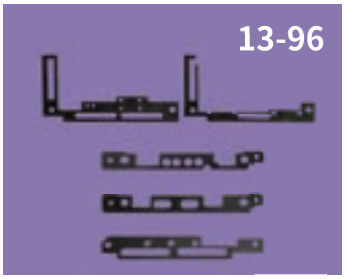
13-96

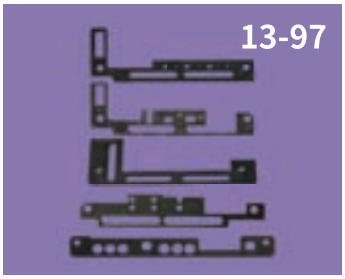
13-97

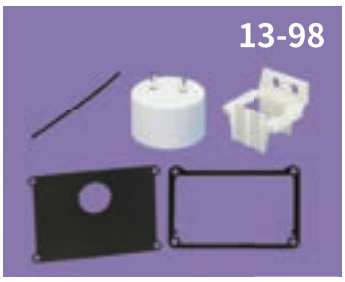
13-98


13-99


13-100


13-101

端子附件，五金 HARDWARE

PINGOOD


14-2


14-3


14-4


14-5


14-6


14-7

与客户共同开发
共创价值与利润

索引 INDEX

索引 INDEX

索引 INDEX

索引 INDEX

索引 INDEX

索引 INDEX

索引 INDEX

01

门扣
MAGNET LATCH, STRIKER LATCH, PUSH LATCH

导光棒
LIGHT PIPE

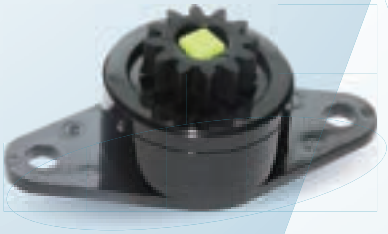

塑胶阻尼器
ROTARY DAMPER

扣具 MAGNET LATCH(磁铁式) 1-2-1

- MATERIAL: NYLON 66(UL)+STEEL
- FLAME CLASS: 94V-0/94V-2
- COLOR: BLACK

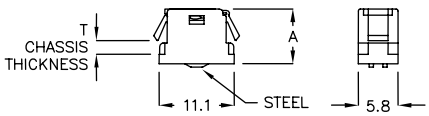

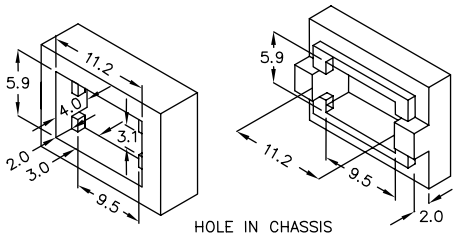

PART NO	A	T CHASSIS THICKNESS	PACKAGE
DLA–01	8.4	2.0	1000

扣具 MAGNET LATCH(磁铁式) 1-2-2

- MATERIAL: NYLON 66(UL)+STEEL
- FLAME CLASS: 94V-0/94V-2
- COLOR: BLACK

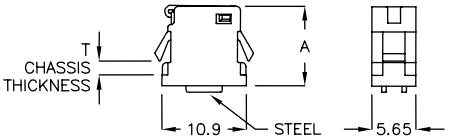

PART NO	A	T CHASSIS THICKNESS	PACKAGE
DLA–02	10.2	1.9	1000

HOLE IN CHASSIS SAME AS DLA–01 (Page 1–2–1)

扣具 MAGNET LATCH(磁铁式) 1-2-3

- MATERIAL: NYLON 66(UL)+STEEL
- FLAME CLASS: 94V-0/94V-2
- COLOR: BLACK

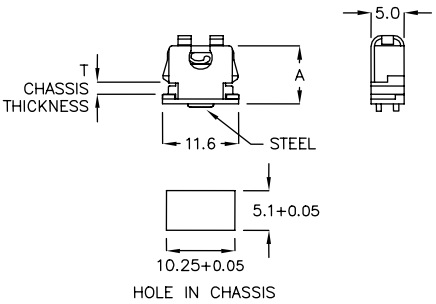

PART NO	A	T CHASSIS THICKNESS	PACKAGE
DLA–03	8.9	2.0	1000

扣具 STRIKER 1-2-4

- MATERIAL: NYLON 66(UL)
- FLAME CLASS: 94V-0/94V-2
- COLOR: NATURAL

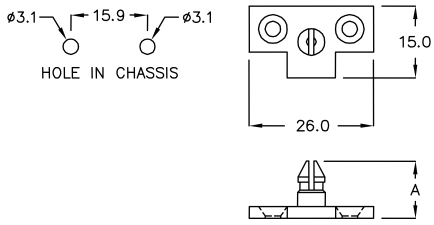

PART NO	A	PACKAGE
DL–10A	12.0	500

TO BE USED WITH P.G. PART DL–10, DL–10F (Page 1–3–3, 1–3–2)

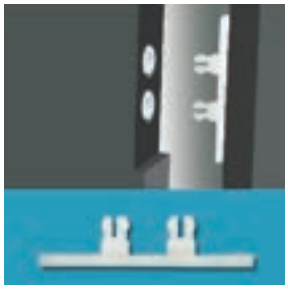

扣具 STRIKER 1-2-5

- MATERIAL: NYLON 66(UL)
- FLAME CLASS: 94V-0/94V-2
- COLOR: NATURAL

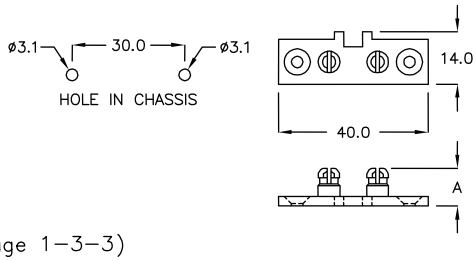

PART NO	A	PACKAGE
DL–10K	10.1	500

TO BE USED WITH P.G. PART DL–10H (Page 1–3–3)

返回图片索引

扣具 LATCH 1-3-1

- MATERIAL: NYLON 66(UL)
- FLAME CLASS: 94V-0/94V-2
- COLOR: NATURAL

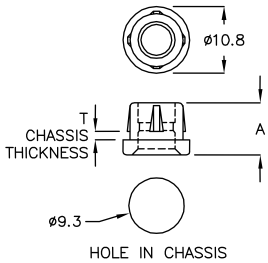

PART NO	A	T CHASSIS THICKNESS	PACKAGE
DL-10	8.5	1.4	500

TO BE USED WITH P.G. PART DL-10A (Page 1-2-4)

扣具 LATCH 1-3-2

- MATERIAL: NYLON 66(UL)
- FLAME CLASS: 94V-0/94V-2
- COLOR: NATURAL

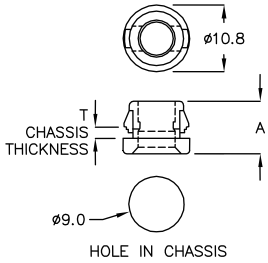

PART NO	A	T CHASSIS THICKNESS	PACKAGE
DL-10F	8.5	1.2~1.6	500

TO BE USED WITH P.G. PART DL-10A (Page 1-2-4)

扣具 LATCH 1-3-3

- MATERIAL: NYLON 66(UL)
- FLAME CLASS : 94V-0/94V-2
- COLOR: NATURAL

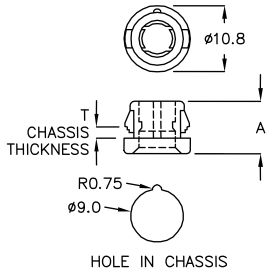

PART NO	A	T CHASSIS THICKNESS	PACKAGE
DL-10H	8.5	1.4~1.6	500

TO BE USED WITH P.G. PART DL-10K (Page 1-2-5)

扣具 LATCH 1-3-4

- MATERIAL: NYLON 66(UL)
- FLAME CLASS: 94V-0/94V-2
- COLOR: BLACK

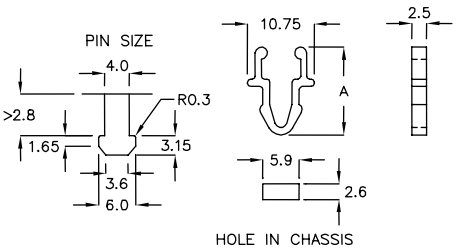

PART NO	A	PACKAGE
DL-2	14.7	1000

扣具 STRIKER 1-3-5

- MATERIAL: NYLON 66(UL)
- FLAME CLASS: 94V-0/94V-2
- COLOR: NATURAL

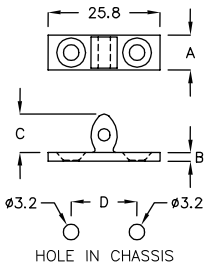

PART NO	A	B	C	D	PACKAGE
DL-008	13.0	1.5	9.9	18.0	1000
DL-8DK	8.0	2.0	8.7	15.2	

DL-8DK TO BE USED WITH P.G. PART DL-9DK (Page 1-4-2)
DL-008 TO BE USED WITH P.G. PART DL-009,
DL-9KA, DLC-14 (Page 1-4-1, 1-4-3)

返回图片索引

扣具 LATCH 1-4-1

- MATERIAL: POM(UL)
- FLAME CLASS: 94HB
- COLOR: NATURAL

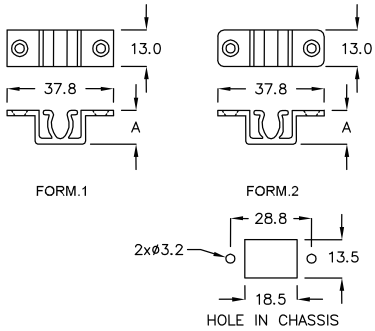

PART NO	A	FORM	PACKAGE
DL-009	12.1	1	200
DL-9KA	12.0	2	

TO BE USED WITH P.G. PART DL-008 (Page 1-3-5)

扣具 LATCH 1-4-2

- MATERIAL: POM(UL)
- FLAME CLASS: 94HB
- COLOR: NATURAL
- WITH COUNTERSUNK SCREW

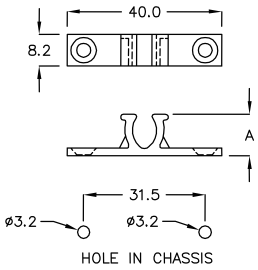

PART NO	A	PACKAGE
DL-9DK	10.8	200

TO BE USED WITH P.G. PART DL-8DK (Page 1-3-5)

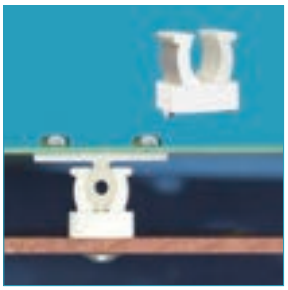

扣具 LATCH 1-4-3

- MATERIAL: NYLON 66(UL)
- FLAME CLASS: 94V-0/94V-2
- COLOR: NATURAL
- USE M3x4 TAPPING SCREW

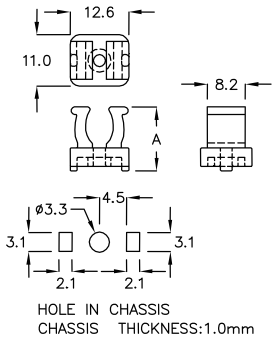

PART NO	A	PACKAGE
DLC-14	13.7	500

TO BE USED WITH P.G. PART DL-008 (Page 1-3-5)

扣具 LATCH 1-4-4

- MATERIAL: POM
- FLAME CLASS: 94HB
- COLOR: BLACK

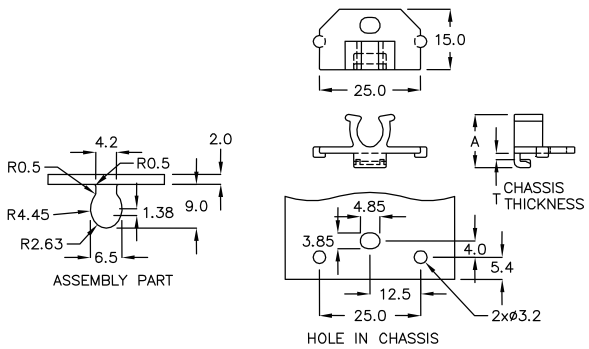

PART NO	A	T CHASSIS THICKNESS	PACKAGE
DLM-06	13.15	1.5	2000

返回图片索引

扣具 LATCH 1-5-1

- MATERIAL: POM(UL)
- FLAME CLASS: 94HB
- COLOR: NATURAL

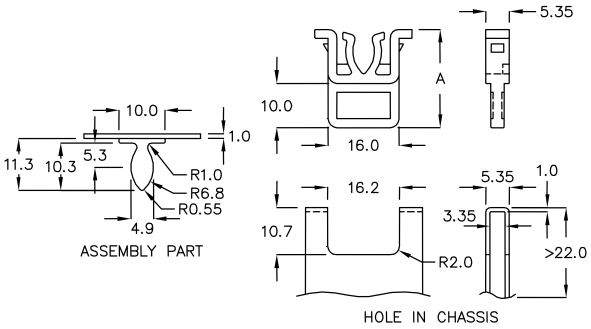

PART NO	A	PACKAGE
DLF-22QT	22.2	200

扣具 STRIKER 1-5-2

- MATERIAL: POM(UL)
- FLAME CLASS: 94HB
- COLOR: NATURAL

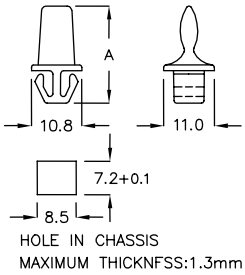

PART NO	A	PACKAGE
DL-20A	20.6	500

TO BF USFD WITH P.G. PART DL-20 (Page 1-5-3)

扣具 LATCH 1-5-3

- MATERIAL: NYLON 66(UL)
- FLAME CLASS: 94V-0/94V-2
- METAL MATERIAL:
  SK7 BLUE ZINE PLASTED
- COLOR: NATURAL

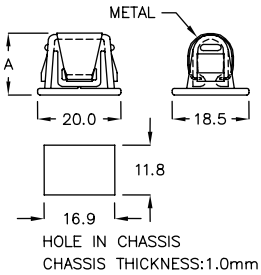

PART NO	A	PACKAGE
DL-20	14.9	500

TO BE USED WITH P.G. PART DL-20A (Page 1-5-2)

扣具 LATCH 1-5-4

- MATERIAL: NYLON 66(UL)
- FLAME CLASS: 94V-0/94V-2
- COLOR: BLACK

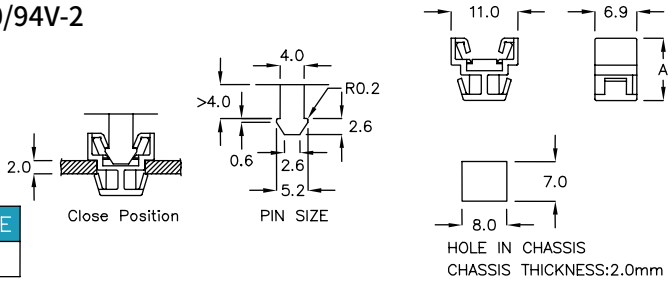

PART NO	A	PACKAGE
DLB-4A	10.2	1000

扣具 LATCH 1-5-5

- MATERIAL: PP(UL),NYLON 6(UL)
- COLOR: BLACK

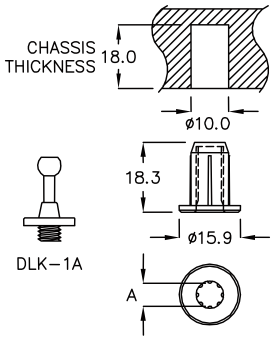

PART NO	MATERIAL	A	PACKAGE
DLK-01	PP V0	ø6.0	500
DLK-02	N6 V2	ø5.85	

TO BE USED WITH P.G. MALE PART DLK-1A (Page 1-6-1)

返回图片索引

扣具 STRIKER 1-6-1

- MATERIAL: NYLON 66(UL)
- FLAME CLASS: 94V-0/94V-2
- COLOR: BLACK

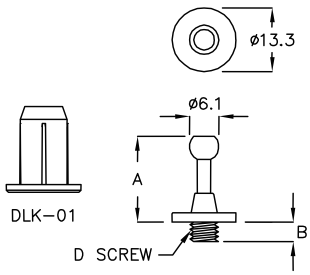

PART NO	A	B	D SCREW	PACKAGE
DLK-1A	18.0	4.0	M6	500

TO BE USED WITH P.G. FEMALE PART DLK-01, DLK-02 (Page 1-5-4)

扣具 STRIKER 1-6-2

- MATERIAL: NYLON 66(UL)
- FLAME CLASS: 94V-0/94V-2
- COLOR: BLACK

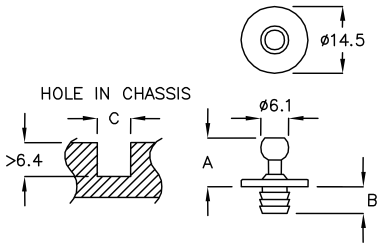

PART NO	A	B	C HOLE IN CHASSIS	PACKAGE
DLK-2A	10.6	5.8	ø6.1	500

TO BE USED WITH P.G. FEMALE PART MPL-02, MPL-04 (Page 1-6-4)

扣具 STRIKER 1-6-3

- MATERIAL: NYLON 66(UL)
- FLAME CLASS: 94V-0/94V-2
- COLOR: BLACK

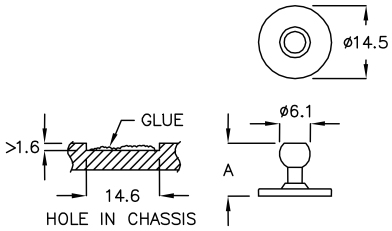

PART NO	A	PACKAGE
DLK-2C	10.6	500

TO BE USED WITH P.G. FEMALE PART MPL-02, MPL-04 (Page 1-6-4)

固定座 LATCH 1-6-4

- MATERIAL: TPE
- COLOR: BLACK

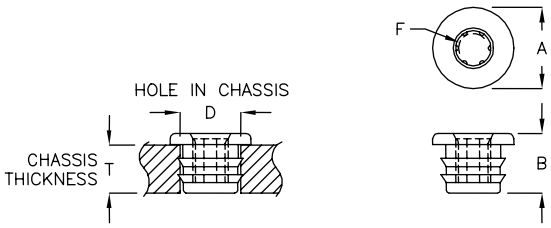

PART NO	A	B	F	T CHASSIS THICKNESS	D HOLE IN CHASSIS	MATERIAL	PACKAGE
MPL-01	ø15.0	10.8	ø6.0	10.0	ø10.0	TPE 55°	500
					ø10.5	TPE 70°	
MPL-02	ø15.0	11.0	ø5.5	10.0	ø10.0	TPE 55°	
					ø10.5	TPE 70°	
MPL-04	ø14.0	10.5	ø5.9	9.5	ø10.0	TPE 55°	
					ø10.5	TPE 70°	

返回图片索引

扣具 PUSH LATCH STRIKER 1-7-1

- MATERIAL: NYLON 66(UL)
- FLAME CLASS: 94V-0/94V-2
- COLOR: BLACK
- WITH COUNTERSUNK SCREW

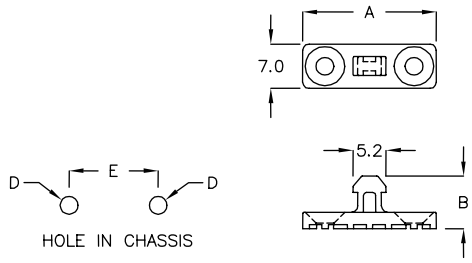

PART NO	A	B	D	E	SUITABLE PUSH LATCH WITH P.G. PART	PACKAGE
DL-03C	21.0	8.3	ø2.8	14.0	DL-150C, DL-400D	1000

TO BE USED WITH P.G. PART DL-SERIES (Page 1-10-1, 1-10-3)

扣具 PUSH LATCH STRIKER 1-7-2

- MATERIAL: NYLON 66(UL)
- FLAME CLASS: 94V-0/94V-2
- COLOR: BLACK
- WITH COUNTERSUNK SCREW

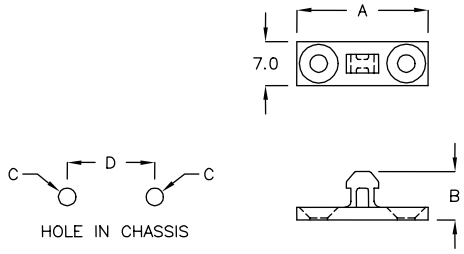

PART NO	A	B	C	D	SUITABLE PUSH LATCH WITH P.G. PART	PACKAGE
DL-001	25.0	10.1	ø3.2	15.0	DL-100B, DL-400D	1000
DL-003	21.0	7.7	ø2.8	14.0	DL-100C, DL-150C DL-400D	
DL-07SK	25.0	10.1	ø3.2	15.0	DL-700F	

TO BE USED WITH P.G. PART DL-SERIES (Page 1-9-2, 1-9-3, 1-10-1, 1-10-3, 1-11-2)

扣具 PUSH LATCH STRIKER 1-7-3

- MATERIAL: NYLON 66(UL)
- FLAME CLASS: 94V-0/94V-2
- COLOR: BLACK
  WITH COUNTERSUNK SCREW

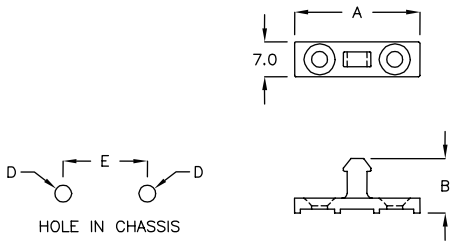

PART NO	A	B	D	E	SUITABLE PUSH LATCH WITH P.G. PART	PACKAGE
DL-002	25.0	11.0	ø3.2	15.0	DL-100A, DL-100C DL-150C, DL-400D	1000

TO BE USED WITH P.G. PART DL-SERIES (Page 1-9-1, 1-9-3, 1-10-1, 1-10-3)

门扣 PUSH LATCH 1-7-4

- MATERIAL: NYLON 66(UL),PC(UL)
- FLAME CLASS: 94V-0/94V-2
- COLOR: BLACK
- MATERIAL: STEEL,SPRING

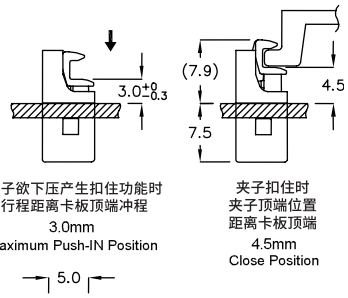

PART NO	A	PACKAGE
DL-250	19.2	1000

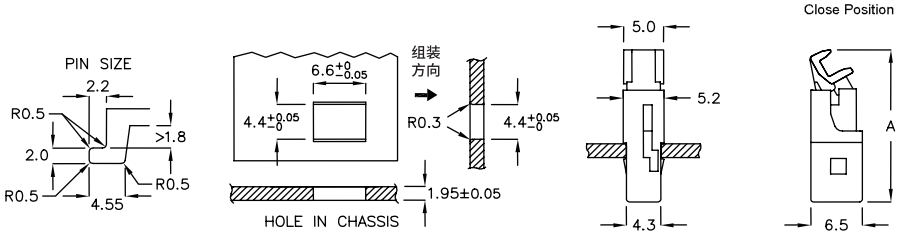

返回图片索引

门扣 PUSH LATCH 1-8-1

- MATERIAL: NYLON 66(UL),PC(UL)
- FLAME CLASS: 94V-0/94V-2
- COLOR: BLACK
- MATERIAL: STEEL,SPRING

PART NO	A	PACKAGE
DL-220C	2.95	2000

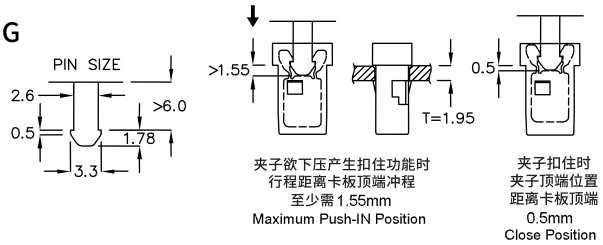

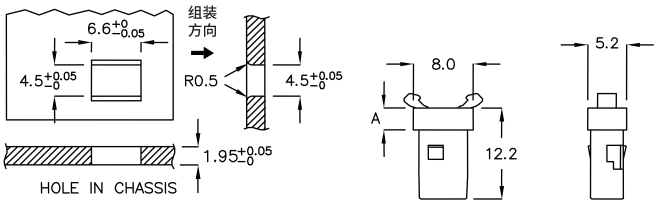

门扣 PUSH LATCH 1-8-2

- MATERIAL: NYLON 66(UL),PC(UL)
- FLAME CLASS: 94V-0/94V-2
- COLOR: BLACK
- MATERIAL: POM,SPRING

PART NO	A	PACKAGE
DL-550	5.0	1000

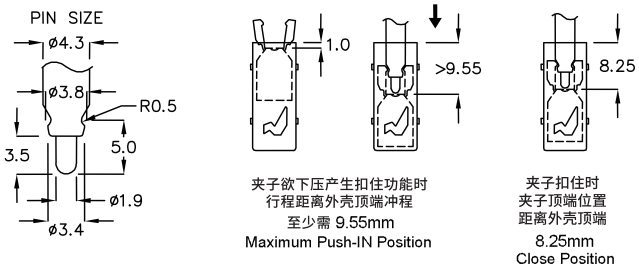

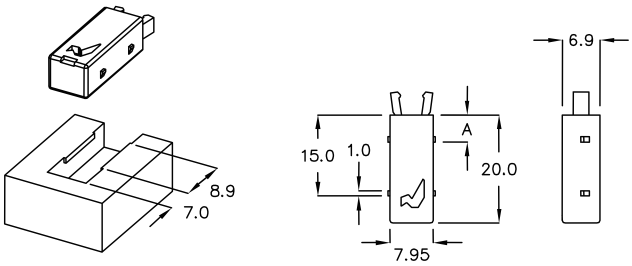

门扣 PUSH LATCH 1-8-3

- MATERIAL: NYLON 66(UL),PC(UL)
- FLAME CLASS: 94V-0/94V-2
- COLOR: BLACK
- MATERIAL: STEEL,SPRING

PART NO	A	PACKAGE
DL-650C	2.9	1000

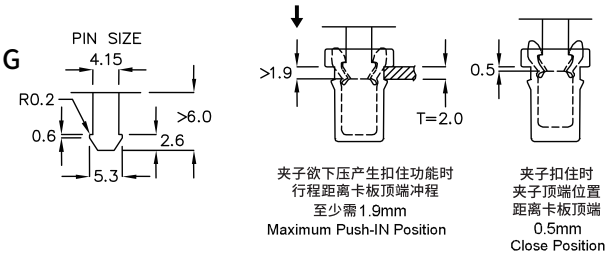

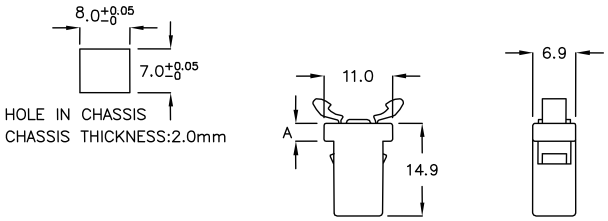

返回图片索引

门扣 PUSH LATCH 1-9-1

- MATERIAL: NYLON 66(UL),PC(UL)
- FLAME CLASS: 94V-0/94V-2
- COLOR: BLACK,GRAY
- MATERIAL: POM,SPRING

PART NO	A	PACKAGE
DL-100A	2.9	1000

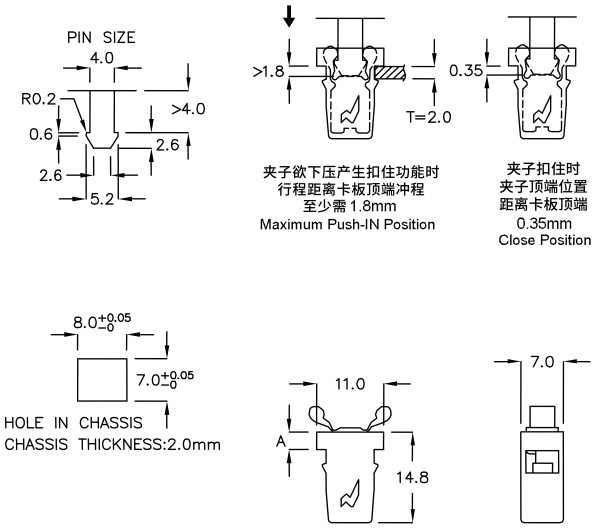

门扣 PUSH LATCH 1-9-2

- MATERIAL: NYLON 66(UL),PC(UL)
- FLAME CLASS: 94V-0/94V-2
- COLOR: BLACK
- MATERIAL: POM,SPRING

PART NO	A	PACKAGE
DL-100B	2.9	1000

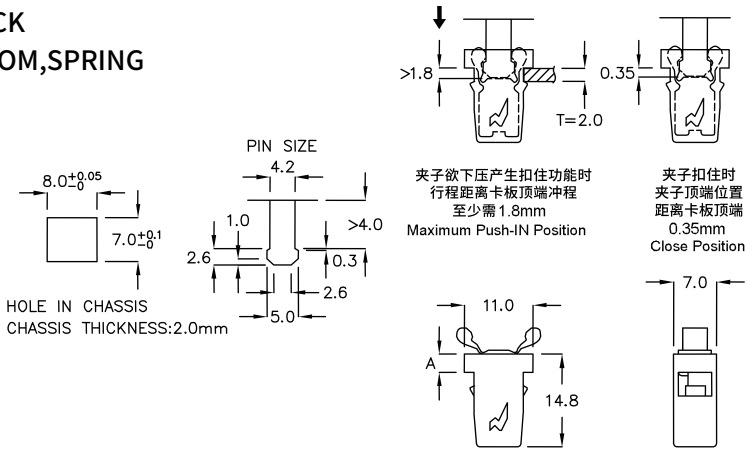

门扣 PUSH LATCH 1-9-3

- MATERIAL: NYLON 66(UL),PC(UL)
- FLAME CLASS: 94V-0/94V-2
- COLOR: BLACK
- MATERIAL: POM,SPRING

PART NO	A	PACKAGE
DL-100C	2.9	1000

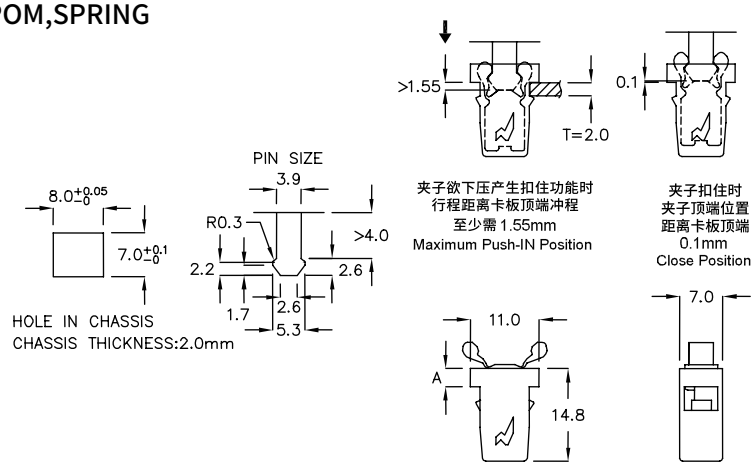

返回图片索引

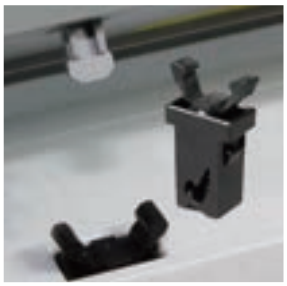

门扣 PUSH LATCH 1-10-1

- MATERIAL: NYLON 66(UL),PC(UL)
- FLAME CLASS: 94V-0/94V-2
- COLOR: BLACK
- MATERIAL: POM,SPRING

PART NO	A	PACKAGE
DL-150C	2.9	1000

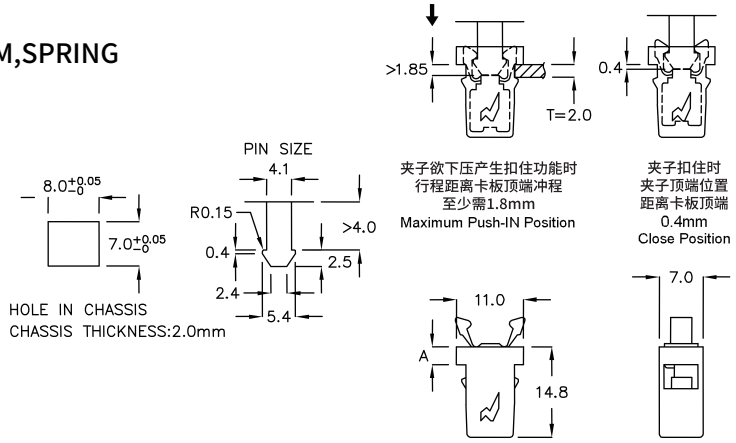

门扣 PUSH LATCH 1-10-2

- MATERIAL: NYLON 66(UL),PC(UL)
- FLAME CLASS: 94V-0/94V-2
- COLOR: BLACK
- MATERIAL: POM,SPRING

PART NO	A	PACKAGE
DL-150F	2.9	1000

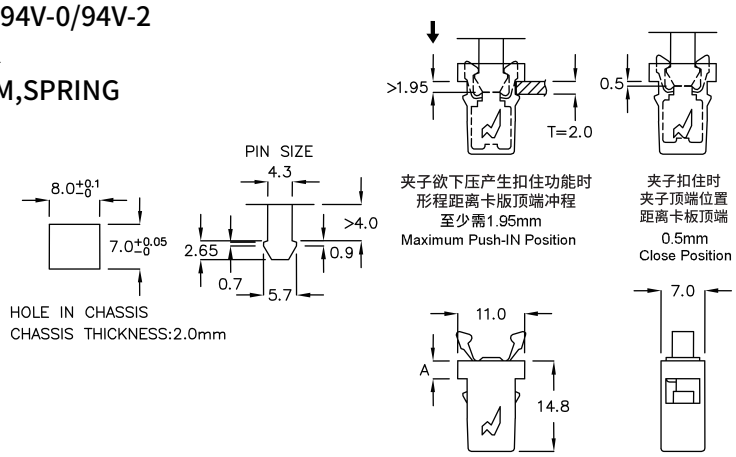

门扣 PUSH LATCH 1-10-3

- MATERIAL: NYLON 66(UL),PC(UL)
- FLAME CLASS: 94V-0/94V-2
- COLOR: BLACK,GRAY
- MATERIAL: POM,SPRING

PART NO	A	PACKAGE
DL-400D	3.1	1000

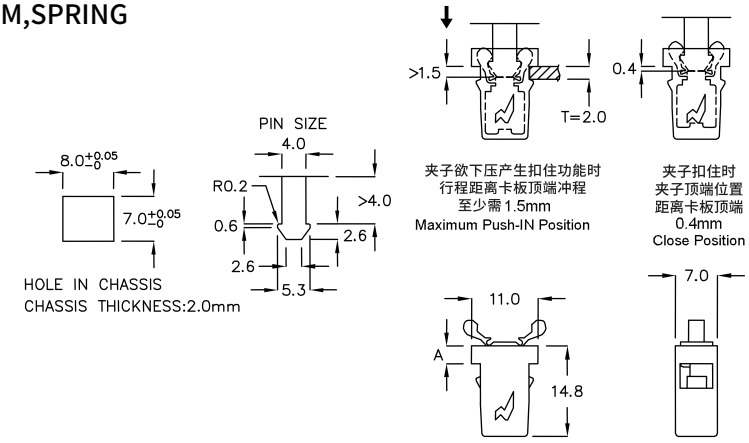

返回图片索引

门扣 PUSH LATCH 1-11-1

- MATERIAL: NYLON 66(UL),PC(UL)
- FLAME CLASS: 94V-0/94V-2
- COLOR: BLACK
- MATERIAL: POM,SPRING

PART NO	A	PACKAGE
DL-400H	3.1	1000

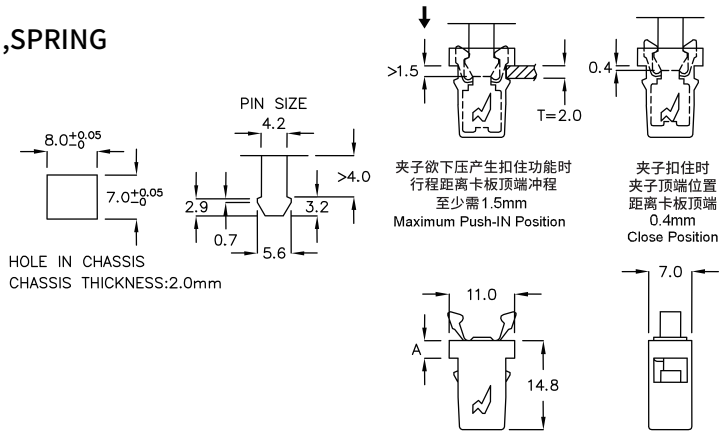

门扣 PUSH LATCH 1-11-2

- MATERIAL: NYLON 66(UL),PC(UL)
- FLAME CLASS: 94V-0/94V-2
- COLOR: BLACK
- MATERIAL: POM,SPRING

PART NO	A	PACKAGE
DL-700F	2.9	1000

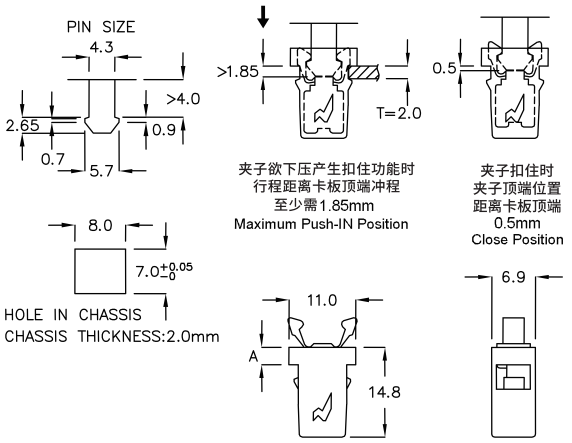

门扣 PUSH LATCH 1-11-3

- MATERIAL: NYLON 66(UL),PC(UL)
- FLAME CLASS: 94V-0/94V-2
- COLOR: BLACK,GRAY
- MATERIAL: POM,SPRING

PART NO	A	PACKAGE
DL-400P	3.1	1000

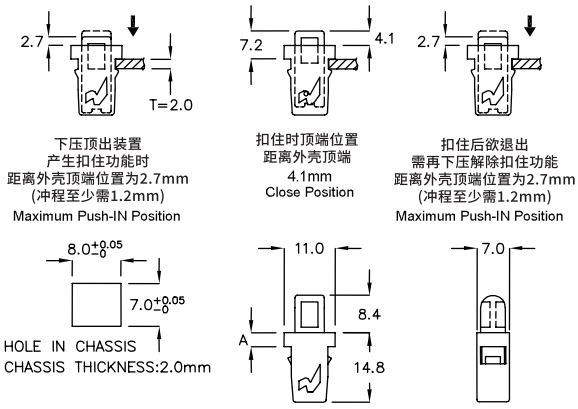

返回图片索引

塑胶阻尼器 ROTARY DAMPER 1-12-1

- MATERIAL: PC(UL)
- FLAME CLASS: 94V-2
- MATERIAL: POM
- FLAME CLASS: 94HB
- COLOR: BLACK

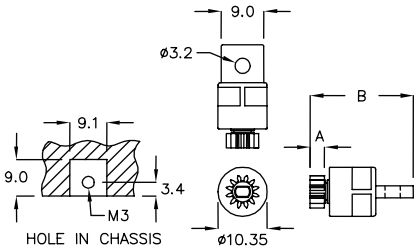

PART NO	PITCH DIAMETER	MODULE	TOOTH NUMBER	PRESSURE ANGLE	A	B	TORQUE (gf-cm)	PACKAGE
PG-10	ø6.0	0.5	12	20°	3.0	21.7	10~30	500

TORQUE VALVE CAN BE CUSTOMIZED PER CUSTOMERS' DEMAND

塑胶阻尼器 ROTARY DAMPER 1-12-2

- MATERIAL: ABS(UL)
- FLAME CLASS: 94HB
- MATERIAL: POM
- FLAME CLASS: 94HB
- COLOR: BLACK

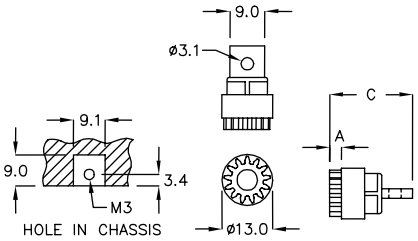

PART NO	PITCH DIAMETER	MODULE	TOOTH NUMBER	PRESSURE ANGLE	A	C	TORQUE (gf-cm)	PACKAGE
PG-01K	ø8.8	0.8	11	20°	3.0	21.7	23,38,63	500
PG-01A	ø10.4	0.8	13	20°	3.2	21.9		

TORQUE VALVE CAN BE CUSTOMIZED PER CUSTOMERS' DEMAND

塑胶阻尼器 ROTARY DAMPER 1-12-3

- MATERIAL: PC(UL)
- FLAME CLASS: 94V-2
- MATERIAL: POM
- FLAME CLASS: 94HB
- COLOR: BLACK

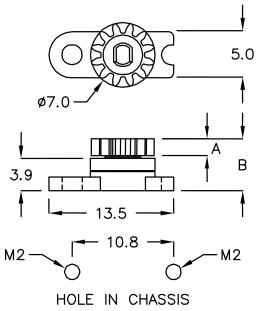

PART NO	PITCH DIAMETER	MODULE	TOOTH NUMBER	PRESSURE ANGLE	A	B	TORQUE (gf-cm)	PACKAGE
PG-04K	ø6.0	0.5	12	20°	1.8	5.7	7~30	1000

TORQUE VALVE CAN BE CUSTOMIZED PER CUSTOMERS' DEMAND

塑胶阻尼器 ROTARY DAMPER 1-12-4

- MATERIAL: PC(UL)
- FLAME CLASS: 94V-2
- MATERIAL: POM
- FLAME CLASS: 94HB
- COLOR: BLACK

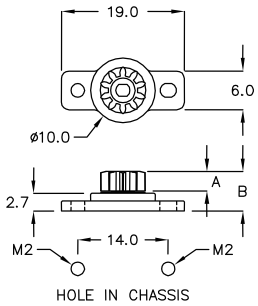

PART NO	PITCH DIAMETER	MODULE	TOOTH NUMBER	PRESSURE ANGLE	A	B	TORQUE (gf-cm)	PACKAGE
PG-07S	ø6.0	0.6	10	20°	3.0	6.1	10~75	1000

TORQUE VALVE CAN BE CUSTOMIZED PER CUSTOMERS' DEMAND

返回图片索引

塑胶阻尼器 ROTARY DAMPER 1-13-1

- MATERIAL: ABS,POM
- FLAME CLASS: 94HB
- COLOR: BLACK

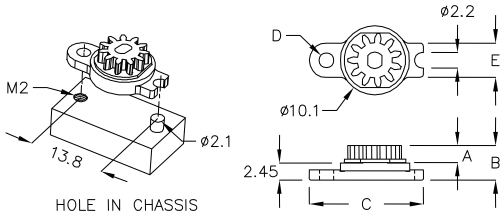

PART NO	PITCH DIAMETER	MODULE	TOOTH NUMBER	PRESSURE ANGLE	A	B	C	D	E	TORQUE (gf-cm)	PACKAGE
PG-7MK	ø6.6	0.6	11	20°	2.45	5.1	16.5	ø2.15	5.0	15,25 45,60	1000
PG-7CN	ø6.6	0.6	11	20°	3.45	6.1	16.5	ø2.15	5.0		

TORQUE VALVE CAN BE CUSTOMIZED PER CUSTOMERS' DEMAND

塑胶阻尼器 ROTARY DAMPER 1-13-2

- MATERIAL: ABS,POM
- FLAME CLASS: 94HB
- COLOR: BLACK

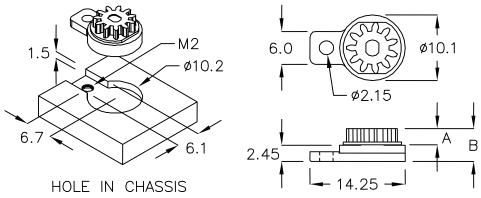

PART NO	PITCH DIAMETER	MODULE	TOOTH NUMBER	PRESSURE ANGLE	A	B	TORQUE (gf-cm)	PACKAGE
PG-7BP	ø6.6	0.6	11	20°	2.45	5.1	15,25,45,60	1000

TORQUE VALVE CAN BE CUSTOMIZED PER CUSTOMERS' DEMAND

塑胶阻尼器 ROTARY DAMPER 1-13-3

- MATERIAL: ABS(UL)
- FLAME CLASS: 94HB
- MATERIAL: POM
- FLAME CLASS: 94HB
- COLOR: BLACK

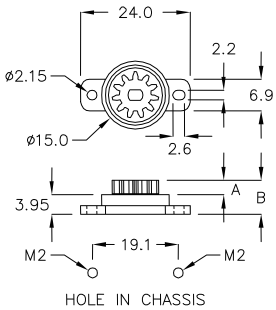

PART NO	PITCH DIAMETER	MODULE	TOOTH NUMBER	PRESSURE ANGLE	A	B	TORQUE (gf-cm)	PACKAGE
PG-3AS	ø8.8	0.8	11	20°	3.55	7.5	15	500
PG-3MS	ø10.4	0.8	13	20°	3.55	7.5		

TORQUE VALVE CAN BE CUSTOMIZED PER CUSTOMERS' DEMAND

塑胶阻尼器 ROTARY DAMPER 1-13-4

- MATERIAL: PC(UL)
- FLAME CLASS: 94V-2
- MATERIAL: POM
- FLAME CLASS: 94HB
- COLOR: BLACK

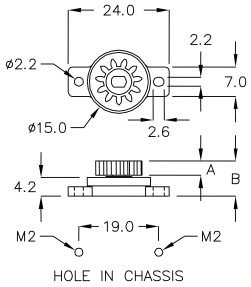

PART NO	PITCH DIAMETER	MODULE	TOOTH NUMBER	PRESSURE ANGLE	A	B	TORQUE (gf-cm)	PACKAGE
PG-13	ø8.8	0.8	11	20°	3.0	7.7	45,70,100,130 150,200,230,270	500
PG-13M	ø10.4	0.8	13	20°	3.0	7.7		

TORQUE VALVE CAN BE CUSTOMIZED PER CUSTOMERS' DEMAND

返回图片索引

塑胶阻尼器 ROTARY DAMPER 1-14-1

- MATERIAL: PC(UL)
- FLAME CLASS: 94V-2
- MATERIAL: POM
- FLAME CLASS: 94HB
- COLOR: BLACK

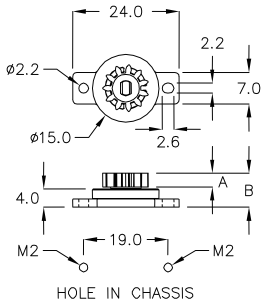

PART NO	PITCH DIAMETER	MODULE	TOOTH NUMBER	PRESSURE ANGLE	A	B	TORQUE (gf-cm)	PACKAGE
PG-13QR	ø8.8	0.8	11	20°	3.0	7.5	15~175	500
PG-13YP	ø10.4	0.8	13	20°	3.0	7.5		

TORQUE VALVE CAN BE CUSTOMIZED PER CUSTOMERS' DEMAND

塑胶阻尼器 ROTARY DAMPER 1-14-2

- MATERIAL: PC(UL)
- FLAME CLASS: 94V-2
- MATERIAL: POM
- FLAME CLASS: 94HB
- COLOR: BLACK

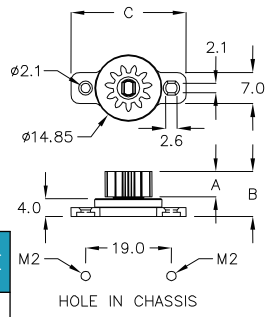

PART NO	PITCH DIAMETER	MODULE	TOOTH NUMBER	PRESSURE ANGLE	A	B	C	TORQUE (gf-cm)	PACKAGE
PG-13DF	ø8.8	0.8	11	20°	5.6	10.0	24.0	40~280	500
PG-13HJ	ø8.8	0.8	11	20°	5.6	10.0	25.5		

TORQUE VALVE CAN BE CUSTOMIZED PER CUSTOMERS' DEMAND

塑胶阻尼器 ROTARY DAMPER 1-14-3

- MATERIAL: PC(UL)
- FLAME CLASS: 94V-2
- MATERIAL: POM
- FLAME CLASS: 94HB
- COLOR: BLACK

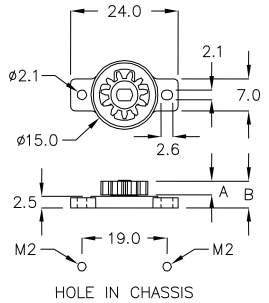

PART NO	PITCH DIAMETER	MODULE	TOOTH NUMBER	PRESSURE ANGLE	A	B	TORQUE (gf-cm)	PACKAGE
PG-13PC	ø8.8	0.8	11	20°	3.0	6.15	45~155	500
PG-13PL	ø10.4	0.8	13	20°	3.0	6.15		

TORQUE VALVE CAN BE CUSTOMIZED PER CUSTOMERS' DEMAND

塑胶阻尼器 ROTARY DAMPER 1-14-4

- MATERIAL: PC(UL)
- FLAME CLASS: 94V-2
- MATERIAL: POM
- FLAME CLASS: 94HB
- COLOR: BLACK

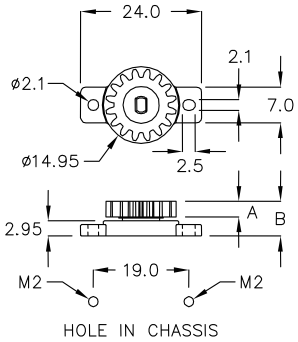

PART NO	PITCH DIAMETER	MODULE	TOOTH NUMBER	PRESSURE ANGLE	A	B	TORQUE (gf-cm)	PACKAGE
PG-21	ø12.8	0.8	16	20°	3.0	6.8	12,25	500

TORQUE VALVE CAN BE CUSTOMIZED PER CUSTOMERS' DEMAND

返回图片索引

塑胶阻尼器 ROTARY DAMPER 1-15-1

- MATERIAL: ABS(UL)
- FLAME CLASS: 94HB
- MATERIAL: POM
- FLAME CLASS: 94HB
- COLOR: BLACK

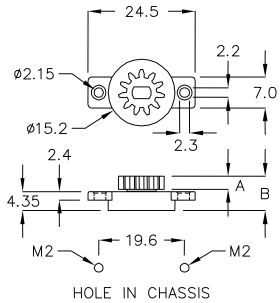

PART NO	PITCH DIAMETER	MODULE	TOOTH NUMBER	PRESSURE ANGLE	A	B	TORQUE (gf-cm)	PACKAGE
PG-8CS	ø8.8	0.8	11	20°	3.0	7.85	15,45 100,130	500
PG-8FS	ø10.4	0.8	13	20°	3.0	7.85		

TORQUE VALVE CAN BE CUSTOMIZED PER CUSTOMERS' DEMAND

塑胶阻尼器 ROTARY DAMPER 1-15-2

- MATERIAL: PC(UL)
- FLAME CLASS: 94V-2
- MATERIAL: POM
- FLAME CLASS: 94HB
- COLOR: BLACK

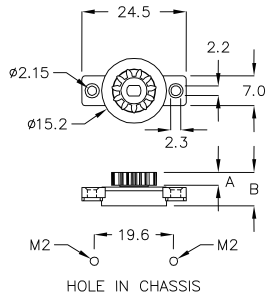

PART NO	PITCH DIAMETER	MODULE	TOOTH NUMBER	PRESSURE ANGLE	A	B	TORQUE (gf-cm)	PACKAGE
PG-08H	ø8.8	0.8	11	20°	3.0	7.8	60,110,190	500

TORQUE VALVE CAN BE CUSTOMIZED PER CUSTOMERS' DEMAND

塑胶阻尼器 ROTARY DAMPER 1-15-3

- MATERIAL: PC(UL)
- FLAME CLASS: 94V-2
- MATERIAL: POM
- FLAME CLASS: 94HB
- COLOR: GRAY

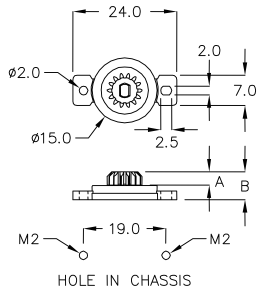

PART NO	PITCH DIAMETER	MODULE	TOOTH NUMBER	PRESSURE ANGLE	A	B	TORQUE (gf-cm)	PACKAGE
PG-15	ø7.0	0.5	14	20°	3.0	6.4	25~110	500

TORQUE VALVE CAN BE CUSTOMIZED PER CUSTOMERS' DEMAND

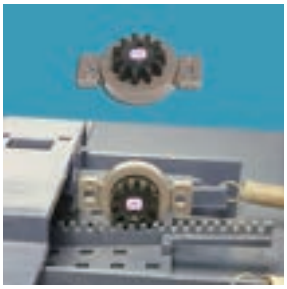

塑胶阻尼器 ROTARY DAMPER 1-15-4

- MATERIAL: PC(UL)
- FLAME CLASS: 94V-2
- MATERIAL: POM
- FLAME CLASS: 94HB
- COLOR: GRAY

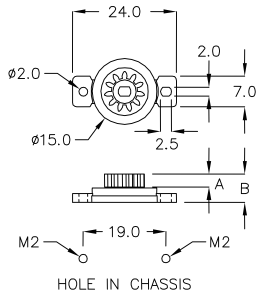

PART NO	PITCH DIAMETER	MODULE	TOOTH NUMBER	PRESSURE ANGLE	A	B	TORQUE (gf-cm)	PACKAGE
PG-15A	ø8.8	0.8	11	20°	3.0	6.4	25~110	500

TORQUE VALVE CAN BE CUSTOMIZED PER CUSTOMERS' DEMAND

返回图片索引

塑胶阻尼器 ROTARY DAMPER 1-16-1

- MATERIAL: ABS(UL)
- FLAME CLASS: 94HB
- MATERIAL: POM
- FLAME CLASS: 94HB
- COLOR: BLACK

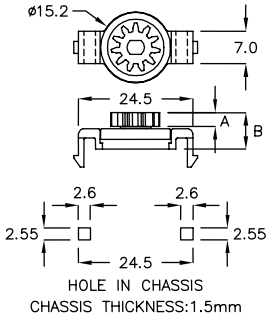

PART NO	PITCH DIAMETER	MODULE	TOOTH NUMBER	PRESSURE ANGLE	A	B	TORQUE (gf-cm)	PACKAGE
PG-8AS	ø8.8	0.8	11	20°	3.0	8.0	15,45 100,130	500
PG-8MS	ø10.4	0.8	13	20°	3.0	8.0		

TORQUE VALVE CAN BE CUSTOMIZED PER CUSTOMERS' DEMAND

塑胶阻尼器 ROTARY DAMPER 1-16-2

- MATERIAL: ABS(UL)
- FLAME CLASS: 94HB
- MATERIAL: POM
- FLAME CLASS: 94HB
- COLOR: BLACK

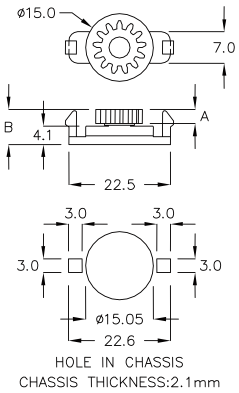

PART NO	PITCH DIAMETER	MODULE	TOOTH NUMBER	PRESSURE ANGLE	A	B	TORQUE (gf-cm)	PACKAGE
PG-8LS	ø8.8	0.8	11	20°	3.0	7.6	15,45 100,130	500
PG-8DS	ø10.4	0.8	13	20°	3.0	7.6		

TORQUE VALVE CAN BE CUSTOMIZED PER CUSTOMERS' DEMAND

塑胶阻尼器 ROTARY DAMPER 1-16-3

- MATERIAL: ABS(UL)
- FLAME CLASS: 94HB
- MATERIAL: POM
- FLAME CLASS: 94HB
- COLOR: BLACK

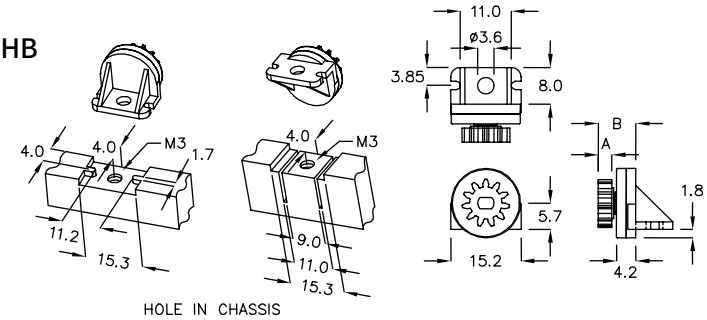

PART NO	PITCH DIAMETER	MODULE	TOOTH NUMBER	PRESSURE ANGLE	A	B	TORQUE (gf-cm)	PACKAGE
PG-5AS	ø8.8	0.8	11	20°	3.0	7.6	15	500
PG-5MS	ø10.4	0.8	13	20°	3.0	7.6		

TORQUE VALVE CAN BE CUSTOMIZED PER CUSTOMERS' DEMAND

返回图片索引

塑胶阻尼器 ROTARY DAMPER 1-17-1

- MATERIAL: ABS(UL)
- FLAME CLASS: 94HB
- MATERIAL: POM
- FLAME CLASS: 94HB
- COLOR: BLACK

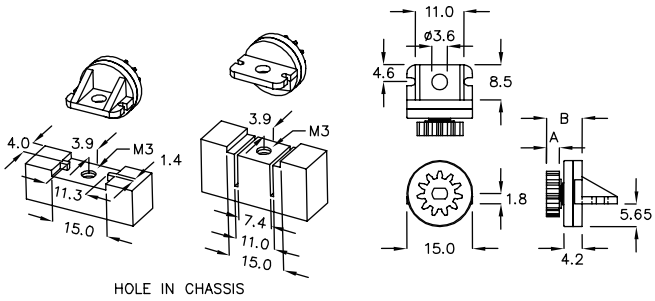

PART NO	PITCH DIAMETER	MODULE	TOOTH NUMBER	PRESSURE ANGLE	A	B	TORQUE (gf-cm)	PACKAGE
PG-5CS	ø8.8	0.8	11	20°	3.0	7.6	15,45 100,130	500
PG-5LS	ø10.4	0.8	13	20°	3.0	7.6		

TORQUE VALVE CAN BE CUSTOMIZED PER CUSTOMERS' DEMAND

塑胶阻尼器 ROTARY DAMPER 1-17-2

- MATERIAL: PC(UL)
- FLAME CLASS: 94V-2
- MATERIAL: POM
- FLAME CLASS: 94HB
  COLOR: BLACK

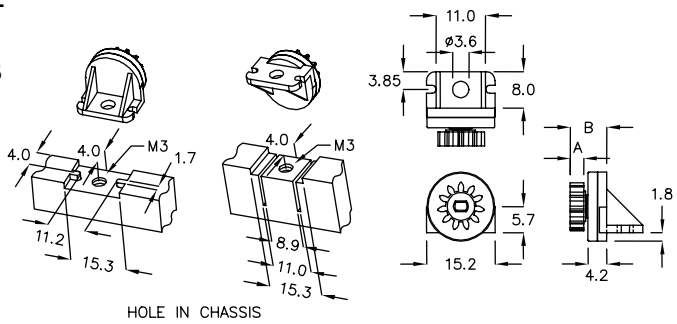

PART NO	PITCH DIAMETER	MODULE	TOOTH NUMBER	PRESSURE ANGLE	A	B	TORQUE (gf-cm)	PACKAGE
PG-12	ø8.8	0.8	11	20°	3.0	7.6	45,70,100,130 150,200,230,270	500
PG-12M	ø10.4	0.8	13	20°	3.0	7.6		

TORQUE VALVE CAN BE CUSTOMIZED PER CUSTOMERS' DEMAND

塑胶阻尼器 ROTARY DAMPER 1-17-3

- MATERIAL: ABS(UL)
- FLAME CLASS: 94HB
- MATERIAL: POM
- FLAME CLASS: 94HB
- COLOR: BLACK

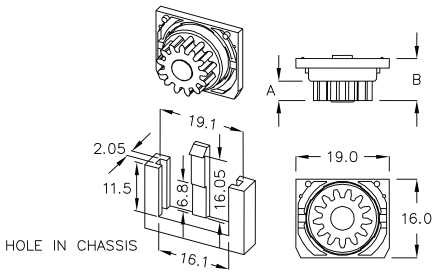

PART NO	PITCH DIAMETER	MODULE	TOOTH NUMBER	PRESSURE ANGLE	A	B	TORQUE (gf-cm)	PACKAGE
PG-06A	ø10.4	0.8	13	20°	4.0	8.9	45,85	500

TORQUE VALVE CAN BE CUSTOMIZED PER CUSTOMERS' DEMAND
INSTALLATION: IS JAMED BY THE CLIP

返回图片索引

塑胶阻尼器 ROTARY DAMPER 1-18-1

- MATERIAL: ABS(UL)
- FLAME CLASS: 94HB
- MATERIAL: POM
- FLAME CLASS: 94HB
- COLOR: BLACK

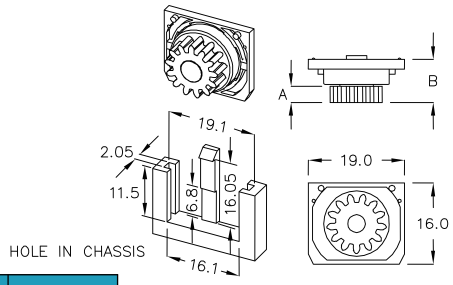

PART NO	PITCH DIAMETER	MODULE	TOOTH NUMBER	PRESSURE ANGLE	A	B	TORQUE (gf-cm)	PACKAGE
PG-06C	ø10.4	0.8	13	20°	3.2	8.55	25,37,65	500

TORQUE VALVE CAN BE CUSTOMIZED PER CUSTOMERS' DEMAND
INSTALLATION: IS JAMED BY THE CLIP

塑胶阻尼器 ROTARY DAMPER 1-18-2

- MATERIAL: PC(UL)
- FLAME CLASS: 94V-2
- MATERIAL: POM
- FLAME CLASS: 94HB
- COLOR: BLACK

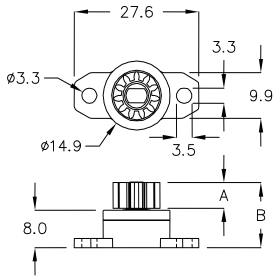

PART NO	PITCH DIAMETER	MODULE	TOOTH NUMBER	PRESSURE ANGLE	A	B	TORQUE (gf-cm)	PACKAGE
PG-16D	ø8.8	0.8	11	20°	5.5	14.0	60~500	500

TORQUE VALVE CAN BE CUSTOMIZED PER CUSTOMERS' DEMAND

塑胶阻尼器 ROTARY DAMPER 1-18-3

- MATERIAL: PC(UL)
- FLAME CLASS: 94V-2
- MATERIAL: POM
- FLAME CLASS: 94HB
- COLOR: BLACK

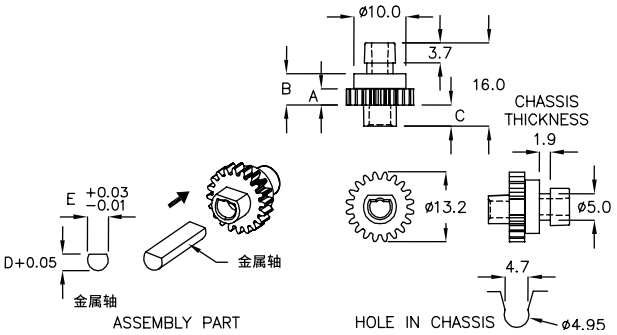

PART NO	PITCH DIAMETER	MODULE	TOOTH NUMBER	PRESSURE ANGLE	A	B	C	D	E	TORQUE (gf-cm)	PACKAGE
PG-17	ø12.0	0.6	20	20°	3.0	6.2	4.0	3.05	ø4.05	13	500
PG-18	ø12.0	0.6	20	20°	3.0	7.2	3.0	3.7	ø4.7	25	

TORQUE VALVE CAN BE CUSTOMIZED PER CUSTOMERS' DEMAND

塑胶阻尼器 ROTARY DAMPER 1-18-4

- MATERIAL: PC(UL)
- FLAME CLASS: 94V-2
- MATERIAL: POM
- FLAME CLASS: 94HB
- COLOR: BLACK

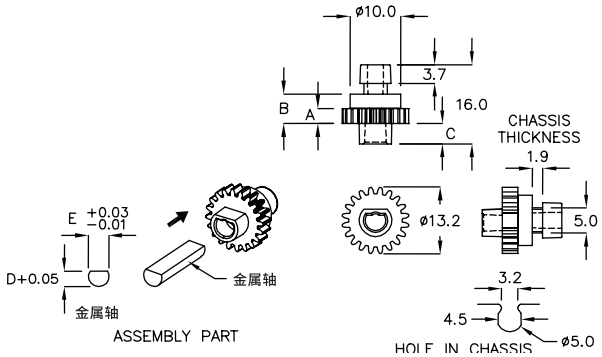

PART NO	PITCH DIAMETER	MODULE	TOOTH NUMBER	PRESSURE ANGLE	A	B	C	D	E	TORQUE (gf-cm)	PACKAGE
PG-17MD	ø12.0	0.6	20	20°	3.0	6.2	4.0	3.05	ø4.05	13	500

TORQUE VALVE CAN BE CUSTOMIZED PER CUSTOMERS' DEMAND

返回图片索引

塑胶阻尼器 ROTARY DAMPER 1-19-1

- MATERIAL: PC(UL)
- FLAME CLASS: 94V-2
- MATERIAL: POM
- FLAME CLASS: 94HB
- COLOR: BLACK

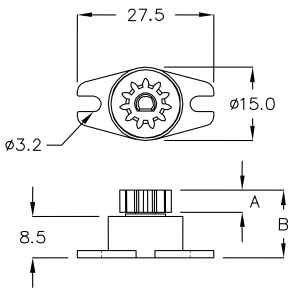

PART NO	PITCH DIAMETER	MODULE	TOOTH NUMBER	PRESSURE ANGLE	A	B	TORQUE (gf-cm)	PACKAGE
PG-22	ø8.8	0.8	11	20°	4.5	13.85	220	500

TORQUE VALVE CAN BE CUSTOMIZED PER CUSTOMERS' DEMAND

塑胶阻尼器 ROTARY DAMPER 1-19-2

- MATERIAL: PC(UL)
- FLAME CLASS: 94V-2
- MATERIAL: POM
- FLAME CLASS: 94HB
- COLOR: BLACK

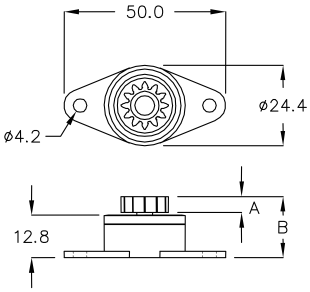

PART NO	PITCH DIAMETER	MODULE	TOOTH NUMBER	PRESSURE ANGLE	A	B	TORQUE (gf-cm)	PACKAGE
PG-20	ø12.0	1.0	12	20°	5.0	18.2	500	64

TORQUE VALVE CAN BE CUSTOMIZED PER CUSTOMERS' DEMAND

塑胶阻尼器 ROTARY DAMPER 1-19-3

- MATERIAL: PC(UL)
- FLAME CLASS: 94V-2
- MATERIAL: POM
- FLAME CLASS: 94HB
- COLOR: BLACK

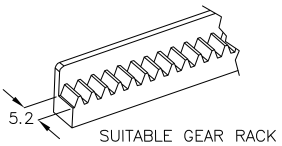

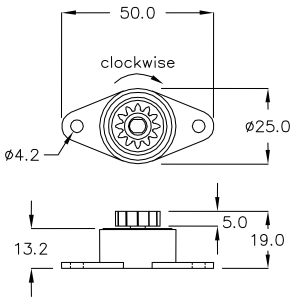

PART NO	PITCH DIAMETER	MODULE	TOOTH NUMBER	PRESSURE ANGLE	TORQUE(gf-cm)		PACKAGE
					withershin	clockwise	
PG-30-600	ø12.0	1.0	12	20°	600	100	64
PG-30-1400	ø12.0	1.0	12	20°	1400	100	

TORQUE VALVE CAN BE CUSTOMIZED PER CUSTOMERS' DEMAND

塑胶阻尼器 ROTARY DAMPER 1-19-4

- MATERIAL: PC(UL)
- FLAME CLASS: 94V-2
- MATERIAL: POM
- FLAME CLASS: 94HB
- COLOR: BLACK

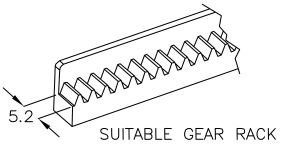

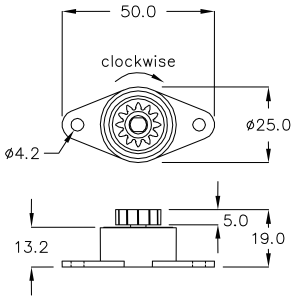

PART NO	PITCH DIAMETER	MODULE	TOOTH NUMBER	PRESSURE ANGLE	TORQUE(gf-cm)		TYPE OF GEARS	PACKAGE
					withershin	clockwise		
PG-50-600	ø12.0	1.0	12	20°	600	100	SPUR GEARS	64
PG-50-1400	ø12.0	1.0	12	20°	1400	100		

TORQUE VALVE CAN BE CUSTOMIZED PER CUSTOMERS' DEMAND

返回图片索引

塑胶阻尼器 ROTARY DAMPER 1-20-1

- MATERIAL: PC(UL)
- FLAME CLASS: 94V-2
- MATERIAL: POM
- FLAME CLASS: 94HB
- COLOR: BLACK

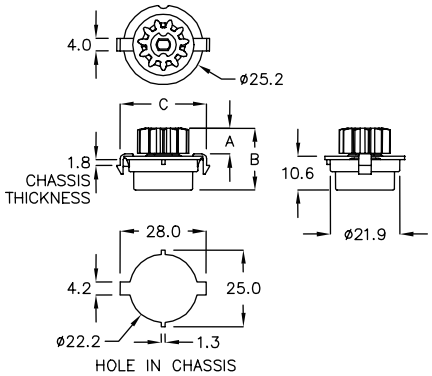

PART NO	PITCH DIAMETER	MODULE	TOOTH NUMBER	PRESSURE ANGLE	A	B	C	TORQUE (gf-cm)	PACKAGE
PG-27	ø13.75	1.25	11	20°	7.9	19.5	27.3	100	200

TORQUE VALVE CAN BE CUSTOMIZED PER CUSTOMERS' DEMAND

塑胶阻尼器 ROTARY DAMPER 1-20-2

- MATERIAL: PC(UL)
- FLAME CLASS: 94V-2
- MATERIAL: POM
- FLAME CLASS: 94HB
- COLOR: BLACK

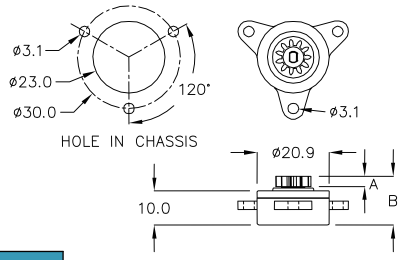

PART NO	PITCH DIAMETER	MODULE	TOOTH NUMBER	PRESSURE ANGLE	A	B	TORQUE (gf-cm)	PACKAGE
PG-40	ø8.8	0.8	11	20°	3.0	14.3	400	200

TORQUE VALVE CAN BE CUSTOMIZED PER CUSTOMERS' DEMAND

塑胶阻尼器 ROTARY DAMPER 1-20-3

- MATERIAL: PC(UL)
- FLAME CLASS: 94V-2
- MATERIAL: POM
- FLAME CLASS: 94HB
- COLOR: BLACK

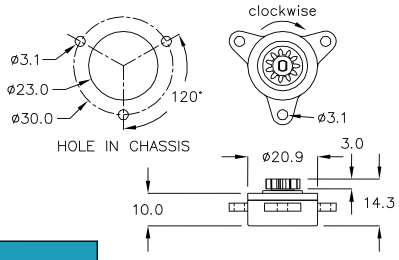

PART NO	PITCH DIAMETER	MODULE	TOOTH NUMBER	PRESSURE ANGLE	TORQUE(gf-cm)		PACKAGE
					withershin	clockwise	
PG-45-380	ø8.8	0.8	11	20°	380	140	200
PG-45-700	ø8.8	0.8	11	20°	700	200	

TORQUE VALVE CAN BE CUSTOMIZED PER CUSTOMERS' DEMAND

导光柱 LIGHT TRANSPORTER 1-20-4

- MATERIAL: PC(UL)
- FLAME CLASS: 94V-2
- COLOR: CLEAR

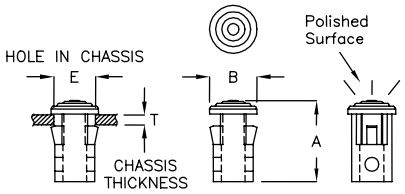

搭配 ∅2 导光光纤使用

PART NO	A	B	E HOLE IN CHASSIS	T CHASSIS THICKNESS	SUITABLE FIBER DIAMETER	PACKAGE
EDN-03	6.9	ø4.1	ø3.5	1.0	ø2.0	1000

返回图片索引

导光柱 LIGHT TRANSPORTER 1-21-1

- MATERIAL: PC(UL)
- FLAME CLASS: 94V-2
- COLOR: CLEAR

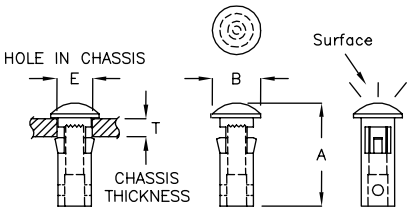

搭配 ∅2、∅3 导光光纤使用

PART NO	Surface	A	B	E HOLE IN CHASSIS	T CHASSIS THICKNESS	SUITABLE FIBER DIAMETER	PACKAGE
EDN−3C	Matt	11.6	ø5.0	ø3.55	3.0	ø2.0	1000
EDN−5A	Polished	6.9	ø5.1	ø4.5	1.0	ø3.0	

导光柱 LIGHT TRANSPORTER 1-21-2

- MATERIAL: PC(UL)
- FLAME CLASS: 94V-2
- COLOR: CLEAR

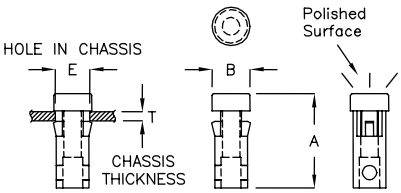

搭配 ∅2 导光光纤使用

PART NO	A	B	E HOLE IN CHASSIS	T CHASSIS THICKNESS	SUITABLE FIBER DIAMETER	PACKAGE
EDN−3K	9.8	ø4.0	ø3.5	1.0	ø2.0	1000

导光柱 LIGHT TRANSPORTER 1-21-3

- MATERIAL: PC(UL)
- FLAME CLASS: 94V-2
- COLOR: CLEAR

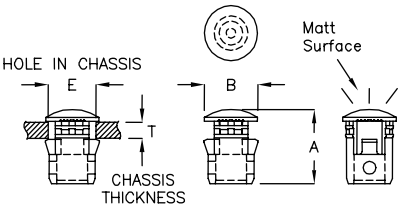

搭配 ∅3 导光光纤使用

PART NO	A	B	E HOLE IN CHASSIS	T CHASSIS THICKNESS	SUITABLE FIBER DIAMETER	PACKAGE
EDN−5SP	ø6.9	ø5.1	ø4.5	1.6	ø3.0	1000

SMD 座 SMD HOUSING 1-21-4

- MATERIAL: NYLON 66(UL)
- FLAME CLASS: 94V-0/94V-2
- COLOR: BLACK

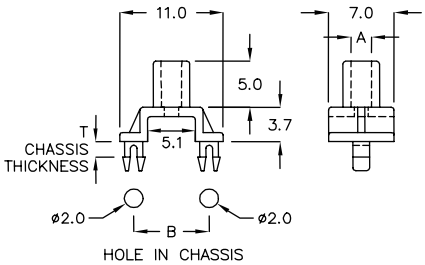

搭配 ∅2、∅3 导光光纤使用

FOR SMD LED					
PART NO	A	B	T CHASSIS THICKNESS	SUITABLE FIBER DIAMETER	PACKAGE
EDZ−01	ø2.2	8.0	1.6	ø2.0	1000
EDZ−2F	ø3.0	8.0	1.6	ø3.0	

返回图片索引

LED 座 LED HOUSING 1-22-1

- MATERIAL: NYLON 66(UL)
- FLAME CLASS: 94V-0/94V-2
- COLOR: BLACK

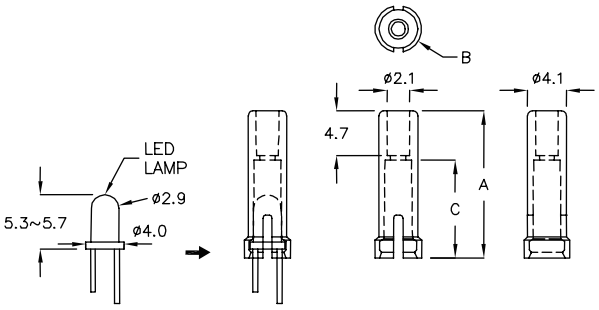

搭配 ∅2 导光光纤使用

FOR ø3 2PIN LED					
PART NO	A	B	C	SUITABLE FIBER DIAMETER	PACKAGE
EDZ−3A	12.5	ø4.9	7.0	ø2.0	1000
★ EDZ−15F	15.5	ø4.9	10.3	ø2.0	

LED 座 LED HOUSING 1-22-2

- MATERIAL: NYLON 66(UL)
- FLAME CLASS: 94V-0/94V-2
- COLOR: BLACK

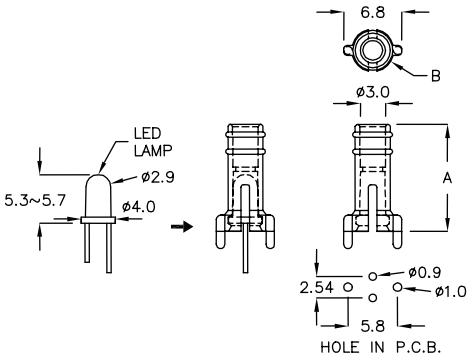

搭配 ∅3 导光光纤使用

FOR ø3 2PIN LED				
PART NO	A	B	SUITABLE FIBER DIAMETER	PACKAGE
EDZ−2A	12.5	ø4.9	ø3.0	1000

LED 座 LED HOUSING 1-22-3

- MATERIAL: NYLON 66(UL)
- FLAME CLASS: 94V-0/94V-2
- COLOR: BLACK

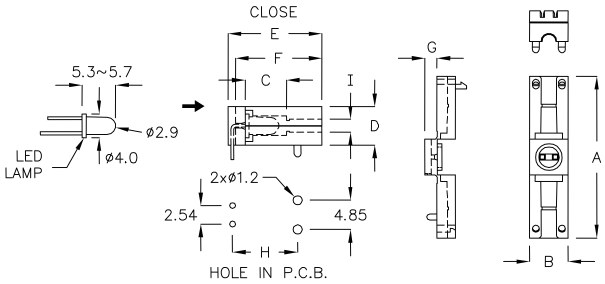

搭配∅2、∅3导光光纤使用

FOR ø3 2PIN LED										
PART NO	A	B	C	D	E	F	G	H	I	FIBER DIAMETER	PACKAGE
EDZ−03	32.8	6.0	7.0	7.0	15.9	14.6	2.9	11.05	2.2	ø2.0	500
EDZ−2C	31.6	7.5	6.0	7.2	14.8	13.5	2.4	10.05	3.0	ø3.0	

返回图片索引

LED 座 LED HOUSING 1-23-1

- MATERIAL: NYLON 66(UL)
- FLAME CLASS: 94V-0/94V-2
- COLOR: BLACK

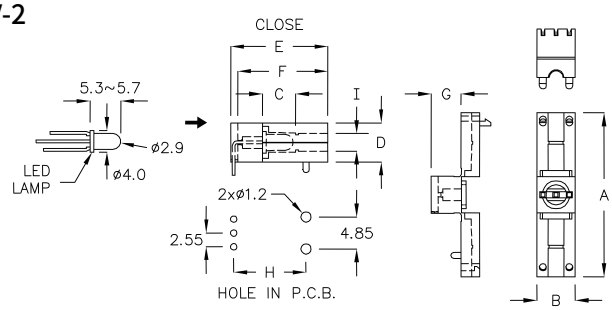

搭配 ∅3 导光光纤使用

FOR ø3 3PIN LED											
PART NO	A	B	C	D	E	F	G	H	I	FIBER DIAMETER	PACKAGE
EDZ-04	31.5	7.5	6.0	7.2	18.15	16.9	5.8	13.5	3.05	ø3.0	500

LED 导光罩 LED CAP 1-23-2

- MATERIAL: PC(UL)
- FLAME CLASS: 94V-2
- COLOR: CLEAR

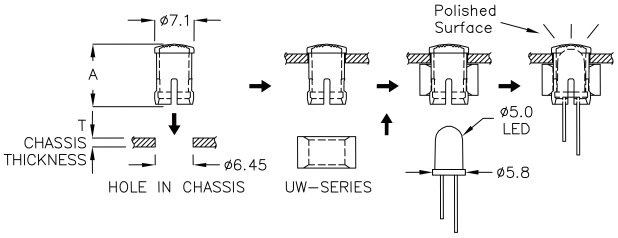

FOR ø5 2PIN LED				
PART NO	A	T CHASSIS THICKNESS	SUITABLE HOLDER	PACKAGE
EDK-01	10.8	0.8	UW-07C	1000
		1.0	UW-07A	
		1.2	UW-06C	
		1.6	UW-06A	
		2.0	UW-05C	
		2.5	UW-05A	
		3.0	UW-04C	
		6.7		

ALSO CAN ASSEMBLE WITH UW-SERIES (Page 1-24-1)

LED 导光罩 LED CAP 1-23-3

- MATERIAL: PC(UL)
- FLAME CLASS: 94V-2
- COLOR: CLEAR

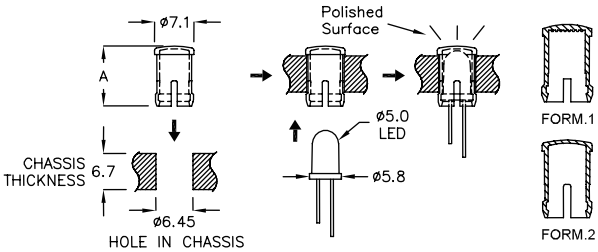

FOR ø5 2PIN LED			
PART NO	A	FORM	PACKAGE
EDK-1C	10.9	1	1000
EDK-1TP	10.8	2	

返回图片索引

固定座 LAMP HOLDER 1-24-1

- MATERIAL: NYLON 66(UL)
- FLAME CLASS: 94V-0/94V-2
- COLOR: BLACK

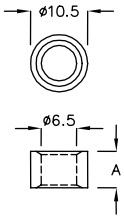

PART NO	A	PACKAGE
UW-04C	4.5	2000
UW-05A	5.0	
UW-05C	5.5	
UW-06A	5.9	1000
UW-06C	6.3	
UW-07A	6.5	
UW-07C	6.7	

ALSO CAN ASSEMBLE WITH EDK-01 (Page 1-23-2)

LED 导光罩 LED CAP 1-24-2

- MATERIAL: PC(UL)
- FLAME CLASS: 94V-2
- COLOR: CLEAR

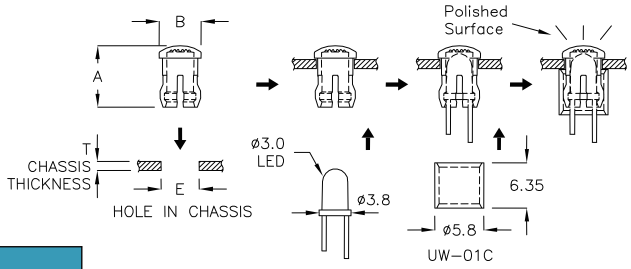

FOR ø3 2PIN LED						
PART NO	A	B	E HOLE IN CHASSIS	T CHASSIS THICKNESS	SUITABLE HOLDER	PACKAGE
EDK-02	7.3	ø5.0	ø4.3	0.8~2.8	UW-01C	1000

ALSO CAN ASSEMBLE WITH UW-SERIES (Page 13-17-5)

LED 导光罩 LED CAP 1-24-3

- MATERIAL: PC(UL)
- FLAME CLASS: 94V-2
- COLOR: CLEAR

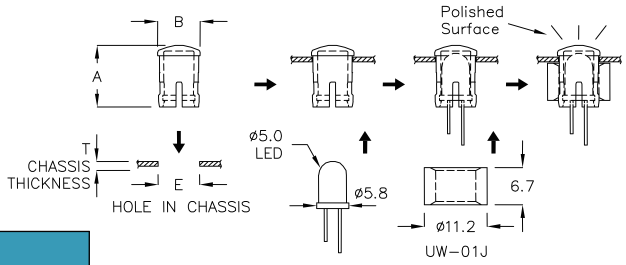

FOR ø5 2PIN LED						
PART NO	A	B	E HOLE IN CHASSIS	T CHASSIS THICKNESS	SUITABLE HOLDER	PACKAGE
EDK-03	11.1	ø7.6	ø7.2	0.8	UW-01J	1000

ALSO CAN ASSEMBLE WITH UW-SERIES (Page 13-17-5)

LED 导光罩 LED CAP 1-24-4

- MATERIAL: PC(UL)
- FLAME CLASS: 94V-2
- COLOR: CLEAR

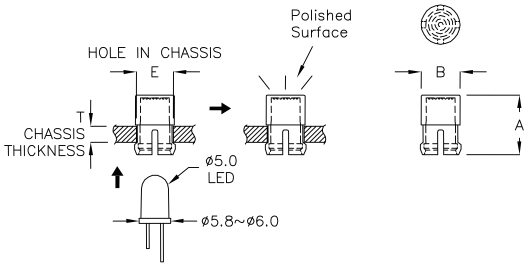

FOR ø5 2PIN LED					
PART NO	A	B	E HOLE IN CHASSIS	T CHASSIS THICKNESS	PACKAGE
EDK-1A	10.9	ø7.15	ø6.4	3.2	1000

返回图片索引

LED 导光罩 LED CAP 1-25-1

- MATERIAL: PC(UL)
- FLAME CLASS: 94V-2
- COLOR: CLEAR

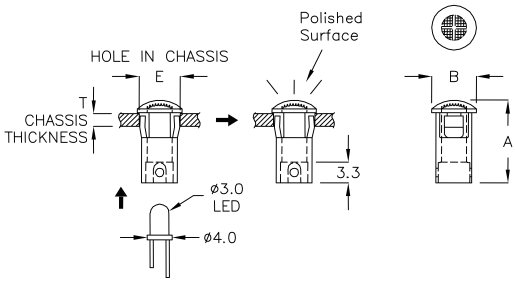

FOR ø3 2PIN LED					
PART NO	A	B	E HOLE IN CHASSIS	T CHASSIS THICKNESS	PACKAGE
EDN−05	13.2	ø7.1	ø6.0	1.6~2.0	1000

LED 导光罩 LED CAP 1-25-2

- MATERIAL: PC(UL)
- FLAME CLASS: 94V-2
- COLOR: CLEAR

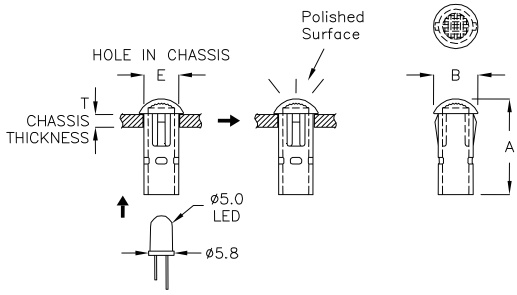

FOR ø5 2PIN LED					
PART NO	A	B	E HOLE IN CHASSIS	T CHASSIS THICKNESS	PACKAGE
EDN−5C	24.2	ø10.1	ø8.5	2.0	500

LED 导光罩 LED CAP 1-25-3

- MATERIAL: PC(UL)
- FLAME CLASS: 94V-2
- COLOR: CLEAR

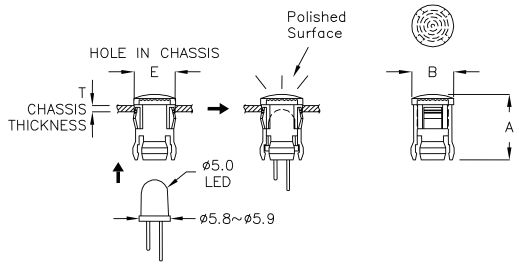

FOR ø5 2PIN LED					
PART NO	A	B	E HOLE IN CHASSIS	T CHASSIS THICKNESS	PACKAGE
EDK−5A	10.9	ø7.0	ø6.4	0.8	1000

LED 导光罩 LED CAP 1-25-4

- MATERIAL: PC(UL)
- FLAME CLASS: 94V-2
- COLOR: CLEAR

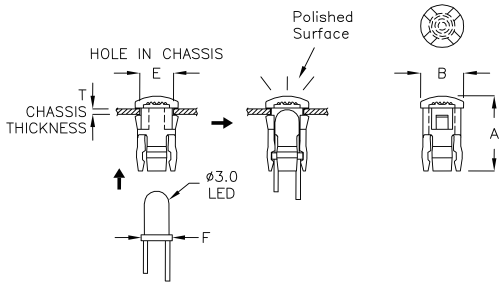

FOR ø3 2PIN LED						
PART NO	A	B	E HOLE IN CHASSIS	F	T CHASSIS THICKNESS	PACKAGE
EDK−3F	9.1	ø5.0	ø4.3	ø3.8	1.1	1000
EDK−3HW	9.3	ø5.3	ø4.8	ø3.9	0.8	

返回图片索引

导光柱 LIGHT PIPE 1-26-1

- MATERIAL: PC(UL)
- FLAME CLASS: 94V-2
- COLOR: CLEAR

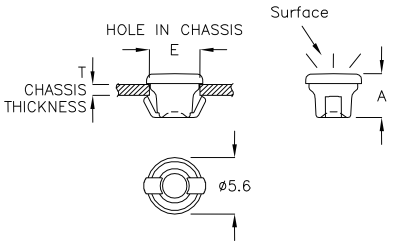

PART NO	Surface	A	E HOLE IN CHASSIS	T CHASSIS THICKNESS	PACKAGE
HHP−04	Polished	4.5	ø5.0	1.0	1000
HHP−4A	Polished	4.9	ø5.0	1.2	
HHP−4F	Polished	3.8	ø5.0	0.8	
HHP−4JP	Matt	3.8	ø5.0	0.8	

导光柱 LIGHT PIPE 1-26-2

- MATERIAL: PC(UL)
- FLAME CLASS: 94V-2
- COLOR: CLEAR

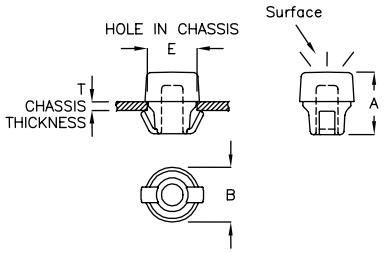

PART NO	SURFACE	A	B	E HOLE IN CHASSIS	T CHASSIS THICKNESS	PACKAGE
HHP−4C	Polished	6.4	ø5.6	ø5.0	0.8	1000
HHP−11JC	Matt	10.8	ø10.0	ø8.5	2.0	

导光柱 LIGHT PIPE 1-26-3

- MATERIAL: PC(UL)
- FLAME CLASS: 94V-2
- COLOR: CLEAR

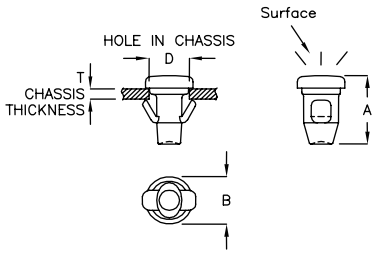

PART NO	SURFACE	A	B	D HOLE IN CHASSIS	T CHASSIS THICKNESS	PACKAGE
HHP−09	Polished	5.5	ø3.8	ø3.2	0.8	1000
HHP−9AC	Matt	9.0	ø5.0	ø4.3	0.8	
HHP−13F	Matt	13.9	ø5.0	ø4.3	0.8	

导光柱 LIGHT PIPE 1-26-4

- MATERIAL：PC(UL)
- COLOR：CLEAR

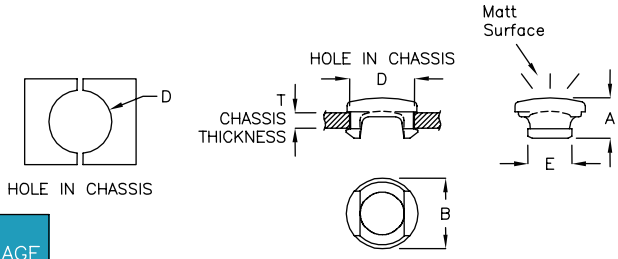

	PART NO	A	B	D HOLE IN CHASSIS	E	T CHASSIS THICKNESS	PACKAGE
★	LDMD−3A	2.7	ø4.0	ø3.0	2.6	1.0	2000
★	LDMD−4A	2.9	ø5.25	ø4.2	3.8	1.0	
	LDMD−5A	3.2	ø5.6	ø5.0	3.5	1.2	

返回图片索引

导光柱 LIGHT PIPE 1-27-1

- MATERIAL: PC(UL)
- FLAME CLASS: 94V-2
- COLOR: CLEAR

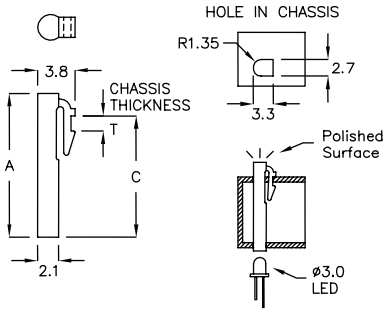

PART NO	A	C	T CHASSIS THICKNESS	PACKAGE
LEAD−14	14.4	12.15	1.2	2000

导光柱 LIGHT PIPE 1-27-2

- MATERIAL: PMMA
- FLAME CLASS: 94HB
- COLOR: CLEAR

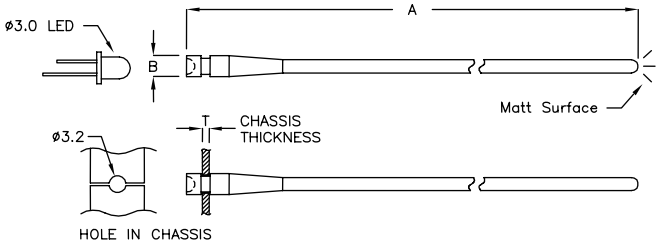

PART NO	A	B	T CHASSIS THICKNESS	PACKAGE
LEAD−15	223.2	ø4.0	1.5	100

导光柱 LIGHT PIPE 1-27-3

- MATERIAL: PC、NYLON 66(UL)
- FLAME CLASS: 94V-0
- COLOR: CLEAR、BLACK

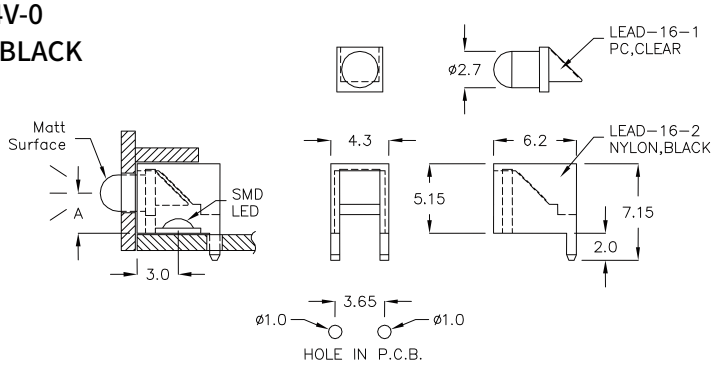

PART NO	A	PACKAGE
LEAD−16	3.0	1000

导光柱 LIGHT PIPE 1-27-4

- MATERIAL: PC(UL)
- FLAME CLASS: 94V-0
- COLOR: CLEAR
- MATERIAL: NYLON 66(UL)
- FLAME CLASS: 94V-2
- COLOR: BLACK

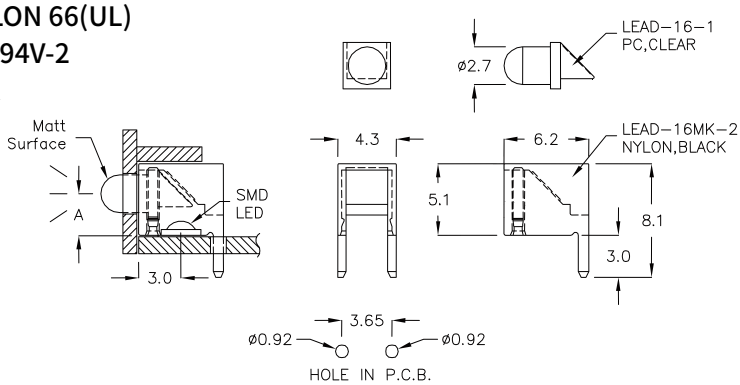

PART NO	A	PACKAGE
LEAD−16MK	3.0	1000

返回图片索引

导光柱 LIGHT PIPE 1-28-1

- MATERIAL: PMMA
- COLOR: CLEAR

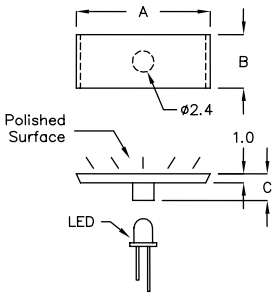

PART NO	A	B	C	PACKAGE
LEAD−17	15.0	6.0	3.0	1000

导光柱 LIGHT PIPE 1-28-2

- MATERIAL: PC(UL)
- FLAME CLASS: 94V-2
- COLOR: CLEAR

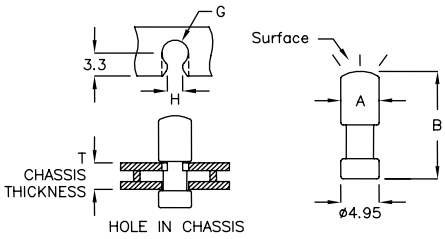

PART NO	A	B	G HOLE IN CHASSIS	H	T CHASSIS THICKNESS	Surface	PACKAGE
LEAD−20	ø4.95	14.1	ø3.65	3.45	4.2	Matt	2000
LEAD−20AC	ø4.95	15.8	ø3.55	3.35	4.3	Polished	

导光柱 LIGHT PIPE 1-28-3

- MATERIAL: PC(UL)
- FLAME CLASS: 94V-2
- COLOR: CLEAR

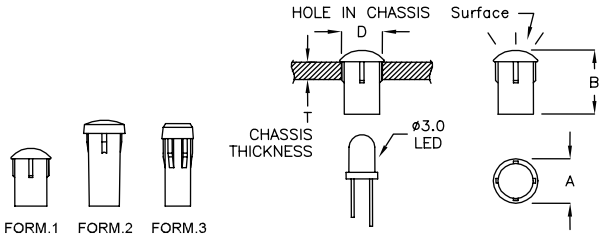

PART NO	A	B	D HOLE IN CHASSIS	T CHASSIS THICKNESS	SURFACE	FORM	PACKAGE
LEAD−3TM	ø3.3	3.95	ø2.85	>1.0	Matt	1	2000
LEAD−9HP	ø3.3	8.55	ø2.95	>1.8	Polished	3	
LEAD−18KT	ø3.8	5.5	ø3.1	>1.6	Polished	1	
LEAD−18	ø3.8	5.5	ø3.2	>1.8	Matt	1	
LEAD−30	ø3.8	4.1	ø3.1	>1.4	Matt	1	
LEAD−30FQ	ø3.8	3.5	ø3.1	>1.4	Matt	1	
LEAD−30M	ø3.8	9.7	ø3.1	>1.0	Polished	2	
LEAD−39	ø3.8	24.8	ø3.1	>1.0	Matt	2	1000

导光柱 LIGHT PIPE 1-28-4

- MATERIAL: PC(UL)
- FLAME CLASS: 94V-2
- COLOR: CLEAR

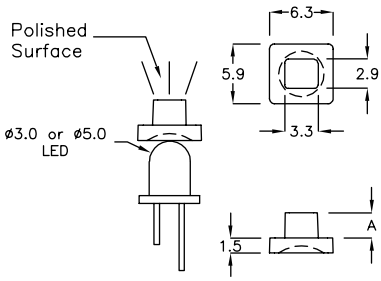

PART NO	A	PACKAGE
LEAD−29	2.5	2000

返回图片索引

导光柱 LIGHT PIPE 1-29-1

- MATERIAL: PC(UL)
- FLAME CLASS: 94V-2
- COLOR: CLEAR

PART NO	A	PACKAGE
LEAD-3FK	2.75	2000

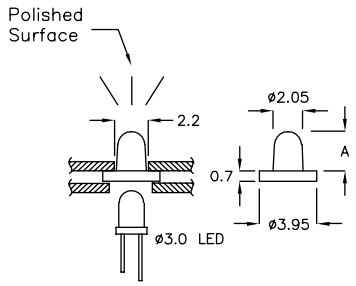

导光柱 LIGHT PIPE 1-29-2

- MATERIAL: PC(UL)
- FLAME CLASS: 94V-2
- COLOR: CLEAR

PART NO	A	PACKAGE
LEAD-35	6.0	2000

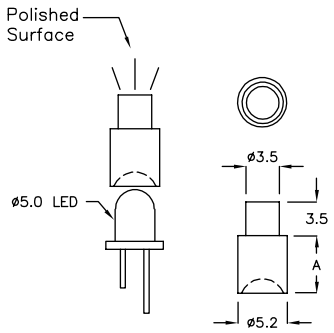

导光柱 LIGHT PIPE 1-29-3

- MATERIAL: PC(UL)
- FLAME CLASS: 94V-2
- COLOR: CLEAR

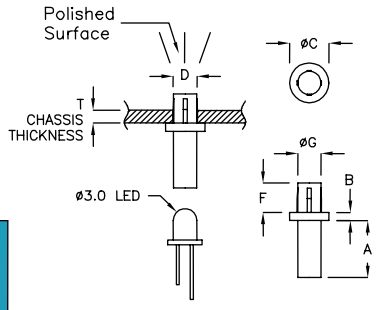

PART NO	A	B	C	D HOLE IN CHASSIS	F	G	T CHASSIS THICKNESS	PACKAGE
LEHD-5Q	1.4	1.3	3.8	ø3.0	2.3	2.6	1.4	2000
LEHD-12F	7.0	1.0	4.9	ø3.0	3.6	2.9	1.6	

导光柱 LIGHT PIPE 1-29-4

- MATERIAL: PMMA
- COLOR: CLEAR

PART NO	A	PACKAGE
LEZD-10	9.0	2000

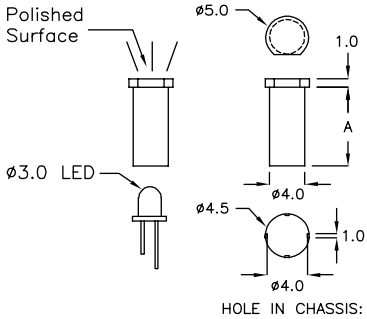

导光柱 LIGHT PIPE 1-29-5

- MATERIAL: PC(UL)
- FLAME CLASS: 94V-2
- COLOR: CLEAR

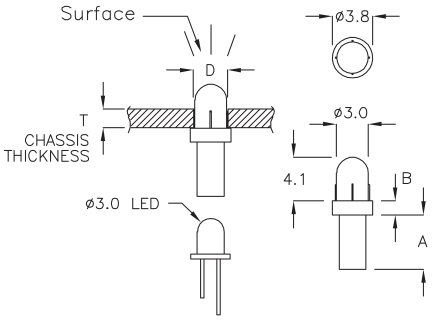

PART NO	A	B	D HOLE IN CHASSIS	T CHASSIS THICKNESS	SURFACE	PACKAGE
LEAD-36	5.1	1.3	ø3.1	1.6	Matt	1000
LEAD-36PQ	5.1	1.3	ø3.0	1.6	Polished	
LEAD-37	1.9	1.3	ø3.1	1.6	Matt	

返回图片索引

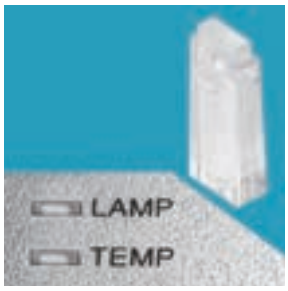

导光柱 LIGHT PIPE 1-30-1

- MATERIAL: PC(UL)
- FLAME CLASS: 94V-2
- COLOR: CLEAR

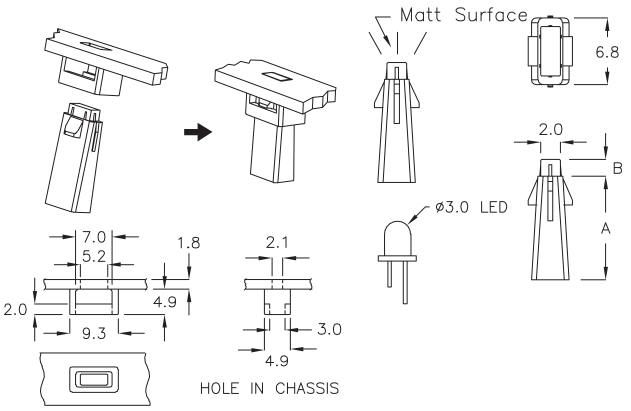

PART NO	A	B	PACKAGE
LEAD−52MK	14.2	1.7	2000

导光柱 LIGHT PIPE 1-30-2

- MATERIAL: PC(UL)
- FLAME CLASS: 94V-2
- COLOR: CLEAR

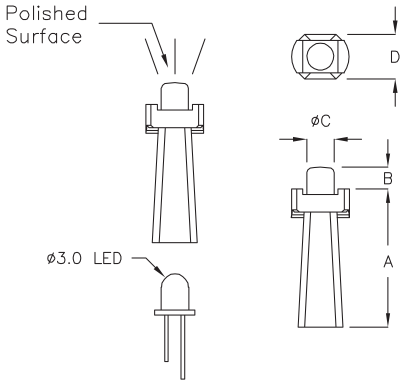

PART NO	A	B	C	D	PACKAGE
LEAD−40	10.1	2.0	2.5	3.0	2000
LEAD−51	12.6	2.0	2.5	4.1	
LEAD−51K	13.5	2.0	1.6	3.0	

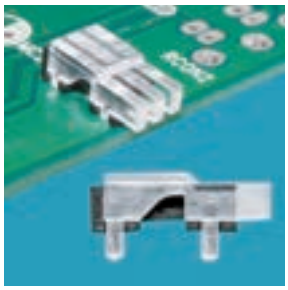

导光柱 LIGHT PIPE 1-30-3

- MATERIAL: PC,NYLON 66(UL)
- FLAME CLASS: 94V-0
- COLOR: CLEAR,BLACK

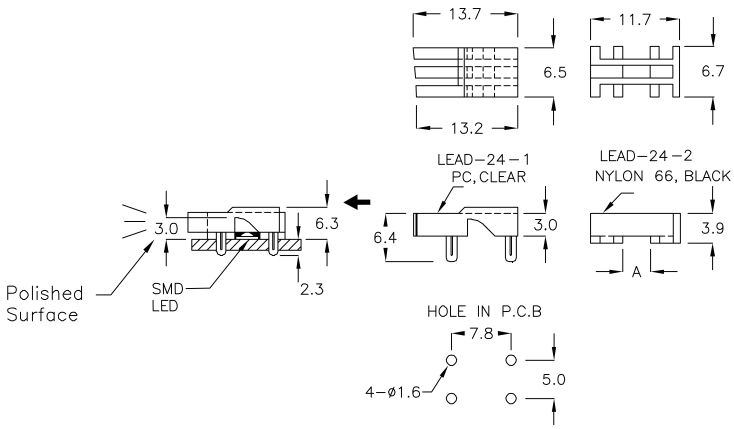

PART NO	A	PACKAGE
LEAD−24	3.6	1000

返回图片索引

导光柱 LIGHT PIPE 1-31-1

- MATERIAL: PC,NYLON 66(UL)
- FLAME CLASS: 94V-2
- COLOR: CLEAR,BLACK

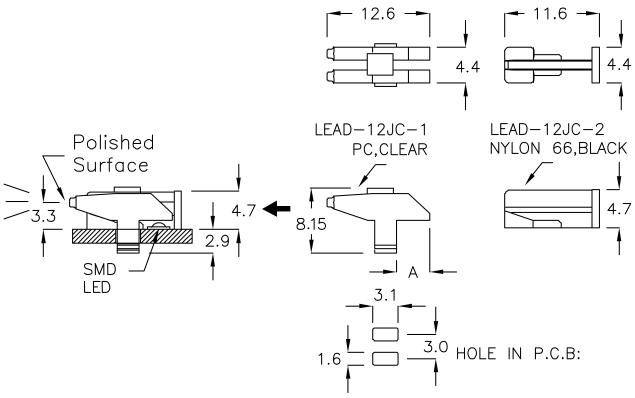

PART NO	A	P.C.B. THICKNESS	PACKAGE
LEAD-12JC	4.0	1.6	1000

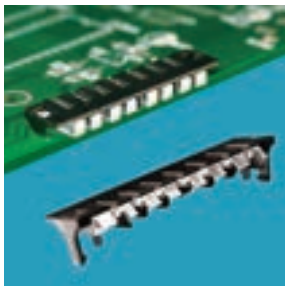

导光柱 LIGHT PIPE 1-31-2

- MATERIAL: PC,NYLON 66(UL)
- FLAME CLASS: 94V-0
- COLOR: CLEAR,BLACK

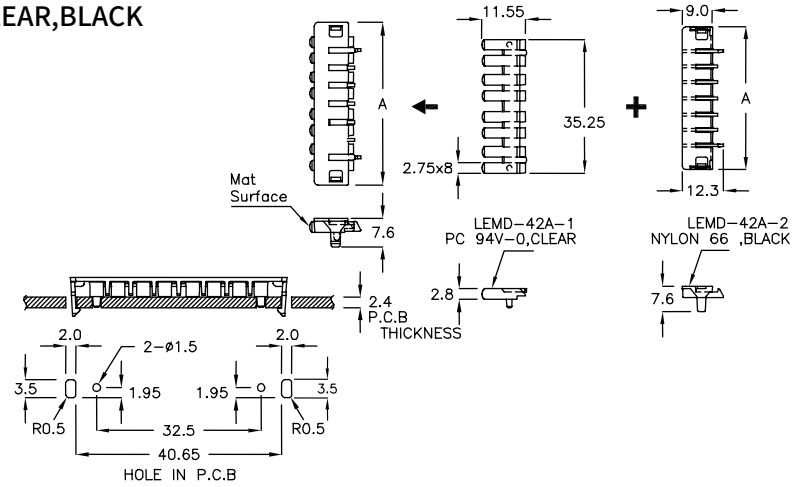

PART NO	A	PACKAGE
LEMD-42A	42.8	200

导光柱 LIGHT PIPE 1-31-3

- MATERIAL: PC,NYLON 66(UL)
- FLAME CLASS: 94V-0
- COLOR: CLEAR,BLACK

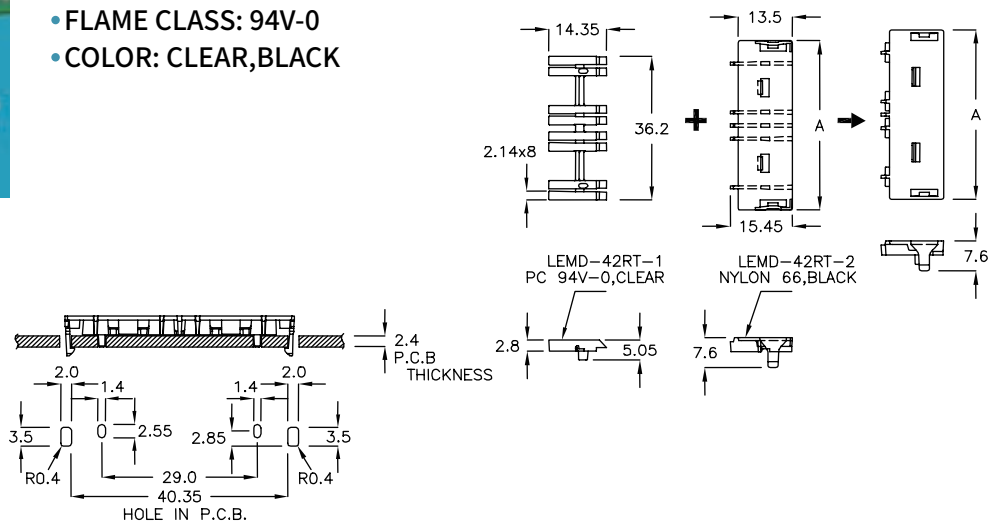

PART NO	A	PACKAGE
LEMD-42RT	42.8	200

返回图片索引

导光柱 LIGHT PIPE 1-32-1

- MATERIAL: PC,NYLON 66(UL)
- FLAME CLASS: 94V-0
- COLOR: CLEAR,BLACK

PART NO	A	PACKAGE
LEMD-61FA	61.8	200

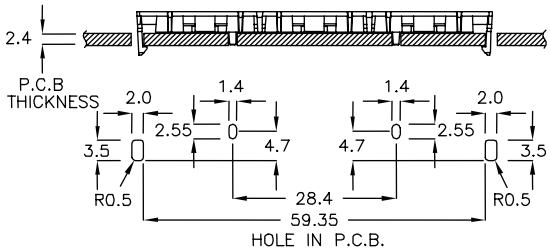

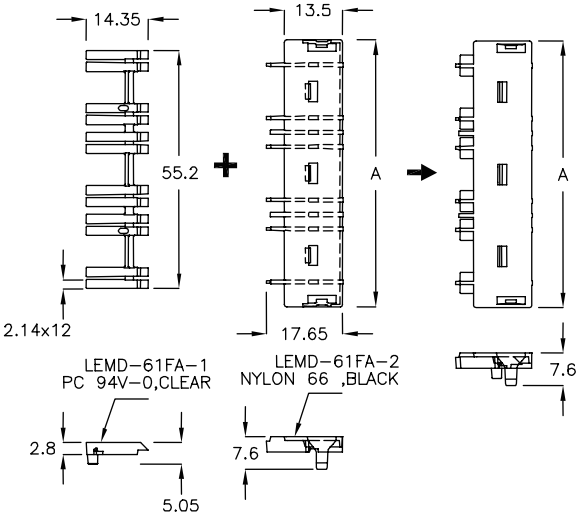

导光柱 LIGHT PIPE 1-32-2

- MATERIAL: PC,NYLON 66(UL)
- FLAME CLASS: 94V-0
- COLOR: CLEAR,BLACK

PART NO	A	PACKAGE
LEUD-60JH	60.15	200

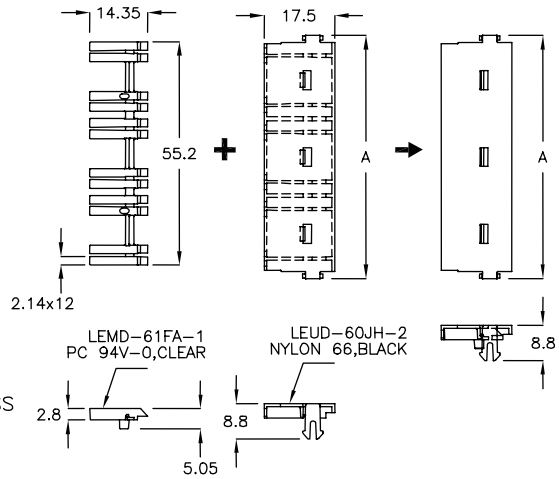

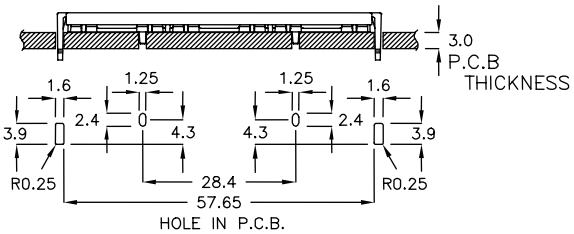

返回图片索引

导光柱 LIGHT PIPE 1-33-1

- MATERIAL: PC,NYLON 66(UL)
- FLAME CLASS: 94V-0
- COLOR: CLEAR,BLACK

PART NO	A	PACKAGE
LEYD-24BG	24.7	200

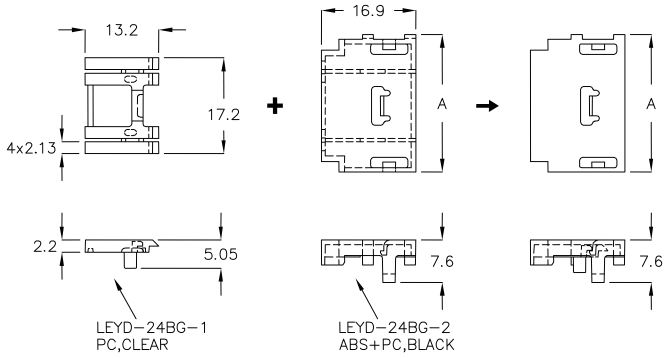

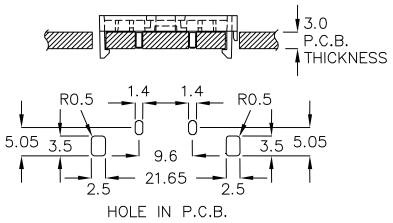

导光柱 LIGHT PIPE 1-33-2

- MATERIAL: PC,NYLON 66(UL)
- FLAME CLASS: 94V-0
- COLOR: CLEAR,BLACK

PART NO	A	PACKAGE
LEMK-31A	31.9	500

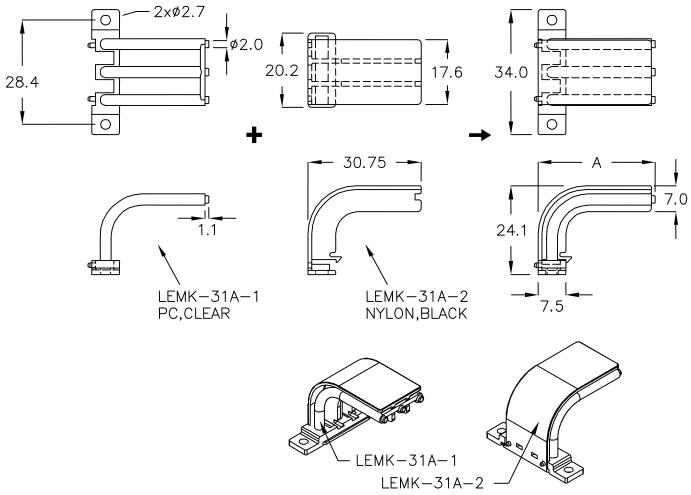

返回图片索引

导光柱 LIGHT PIPE 1-34-1

- MATERIAL: PC(UL)
- FLAME CLASS: 94V-0
- COLOR: CLEAR

PART NO	A	PACKAGE
LEFD-4A	4.7	1000

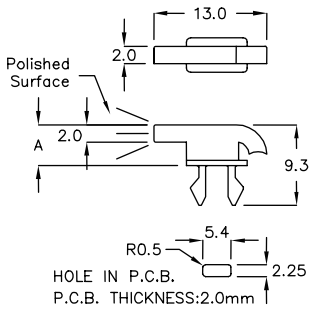

导光柱 LIGHT PIPE 1-34-2

- MATERIAL: PC(UL)
- FLAME CLASS: 94V-0
- COLOR: CLEAR

PART NO	A	PACKAGE
LEFD-4RZ	4.65	1000

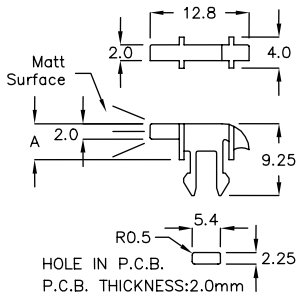

导光柱 LIGHT PIPE 1-34-3

- MATERIAL: PC(UL)
- FLAME CLASS: 94V-0
- COLOR: CLEAR

PART NO	A	PACKAGE
LEFD-9DK	9.7	1000

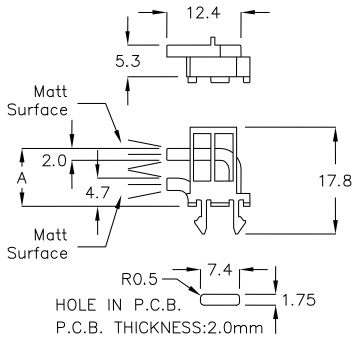

导光柱 LIGHT PIPE 1-34-4

- MATERIAL: PC(UL)
- FLAME CLASS: 94V-0
- COLOR: CLEAR

PART NO	A	PACKAGE
LEFD-9MQ	9.7	1000

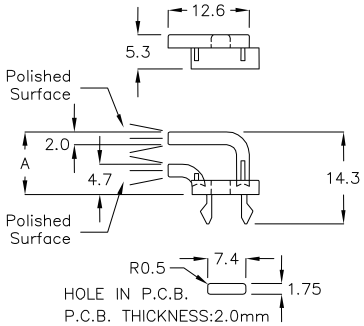

导光柱 LIGHT PIPE 1-34-5

- MATERIAL: PC(UL)
- FLAME CLASS: 94V-2
- COLOR: CLEAR

PART NO	A	B	C	PACKAGE
HHQ-01	ø5.0	ø3.3	9.2	2000

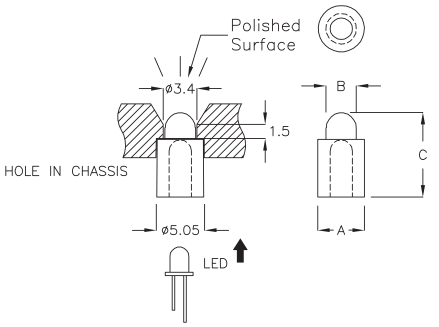

返回图片索引

保护盖 COVER 1-35-1

- MATERIAL: PC(UL)
- FLAME CLASS: 94V-2
- COLOR: CLEAR

PART NO	A	B	PACKAGE
BHB-06	6.0	2.5	2000

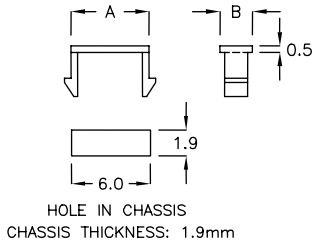

导光柱 LIGHT PIPE 1-35-2

- MATERIAL: PC(UL)
- FLAME CLASS: 94V-0
- COLOR: CLEAR

PART NO	A	B	C	PACKAGE
LEAD-43KT	43.2	40.5	ø2.9	200

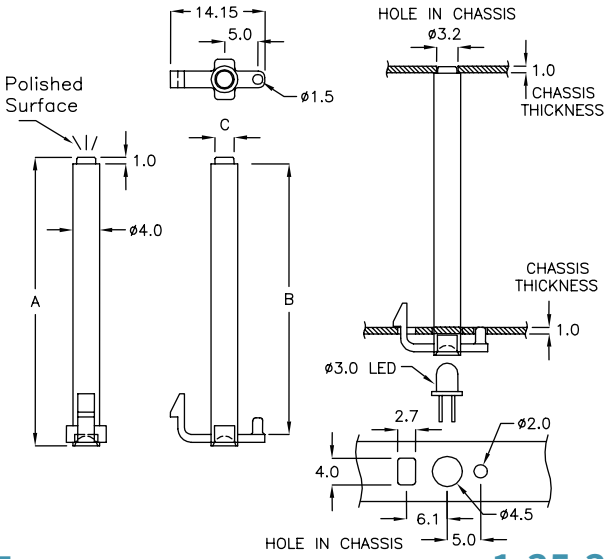

导光柱 LIGHT PIPE 1-35-3

- MATERIAL: PC(UL)
- FLAME CLASS: 94V-2
- COLOR: CLEAR

PART NO	A	B	C	PACKAGE
LEAD-25	29.7	26.2	16.0	500

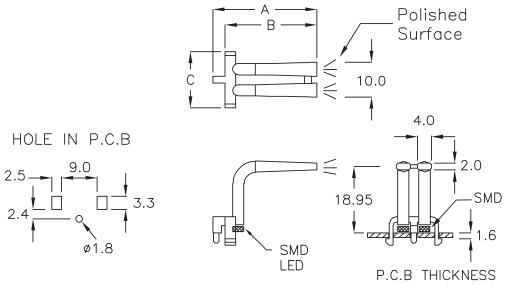

导光柱 LIGHT PIPE 1-35-4

- MATERIAL: PC(UL)
- FLAME CLASS: 94V-2
- COLOR: CLEAR

PART NO	A	B	C	PACKAGE
LEAD-26	29.7	26.2	16.0	500

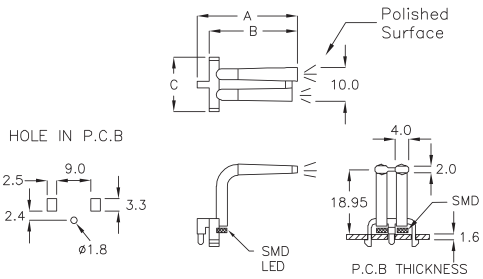

导光柱 LIGHT PIPE 1-35-5

- MATERIAL: PC(UL)
- FLAME CLASS: 94V-0
- COLOR: CLEAR

MATERIAL: PC(UL)
FLAME CLASS: 94V-0
COLOR: CLEAR

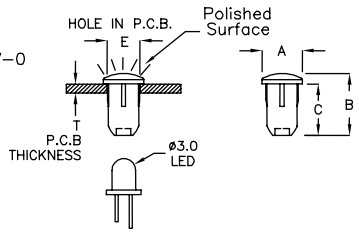

PART NO	A	B	C	E HOLE IN P.C.B.	T P.C.B. THICKNESS	PACKAGE
LEAD-7QS	ø5.0	7.7	6.4	ø3.9	≧2.0	2000

返回图片索引

导光柱 LIGHT PIPE 1-36-1

- MATERIAL: PC(UL)
- FLAME CLASS: 94V-2
- COLOR: CLEAR

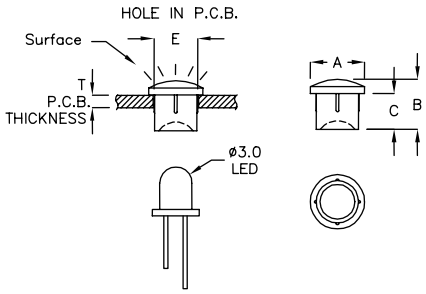

PART NO	A	B	C	E HOLE IN P.C.B.	T P.C.B. THICKNESS	SURFACE	PACKAGE
LEAD-4RK	ø3.8	3.95	2.95	ø3.1	≧1.4	Matt	2000
LEAD-28	ø5.0	4.6	3.3	ø3.96	≧1.6	Matt	
LEAD-28AM	ø5.0	4.6	3.3	ø3.96	≧1.6	Polished	

导光柱 LIGHT PIPE 1-36-2

- MATERIAL: PC(UL)
- FLAME CLASS: 94V-2
- COLOR: CLEAR

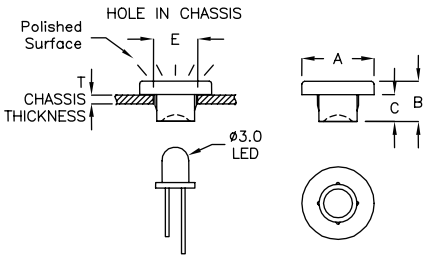

PART NO	A	B	C	E HOLE IN CHASSIS	T CHASSIS THICKNESS	PACKAGE
LEVD-5GS	ø5.5	3.05	2.05	ø3.0	≧2.0	2000

导光柱 LIGHT PIPE 1-36-3

- MATERIAL: PC(UL)
- FLAME CLASS: 94V-2
- COLOR: CLEAR

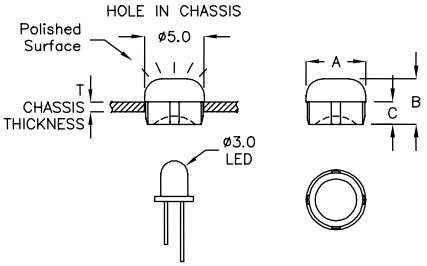

PART NO	A	B	C	T CHASSIS THICKNESS	PACKAGE
LEWD-04	ø5.25	4.0	2.0	≧0.8	2000

导光柱 LIGHT PIPE 1-36-4

- MATERIAL: PC(UL)
- FLAME CLASS: 94V-2
- COLOR: CLEAR

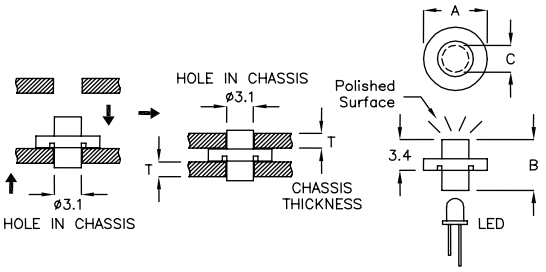

PART NO	A	B	C	T CHASSIS THICKNESS	PACKAGE
LEAD-5A	ø7.0	5.6	ø2.95	2.0	2000

返回图片索引

导光柱 LIGHT PIPE 1-37-1

- MATERIAL: PC(UL)
- FLAME CLASS: 94V-2
- COLOR: NATURAL

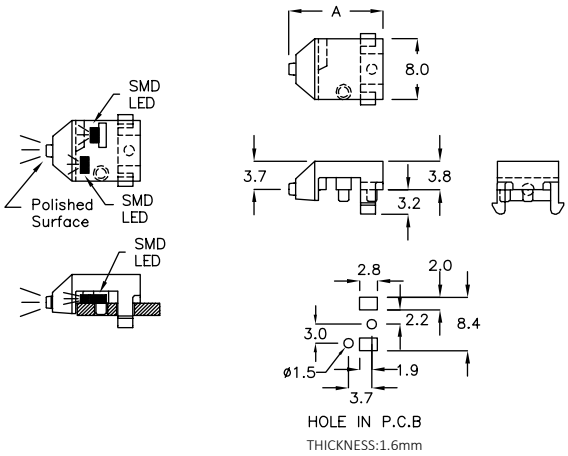

PART NO	A	P.C.B. THICKNESS	PACKAGE
LESD−12K	12.4	1.6	1000

导光柱 LIGHT PIPE 1-37-2

- MATERIAL: PC(UL)
- FLAME CLASS: 94V-2
- COLOR: CLEAR

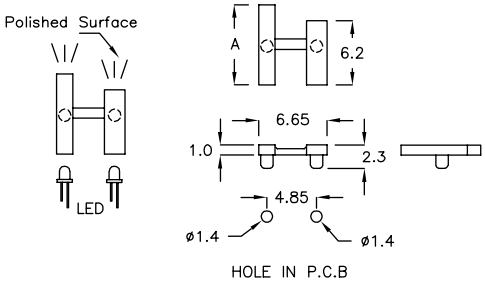

PART NO	A	P.C.B. THICKNESS	PACKAGE
LETD−6K	7.75	1.6	2000

导光柱 LIGHT PIPE 1-37-3

- MATERIAL: PC
- FLAME CLASS: 94V-0
- COLOR: CLEAR

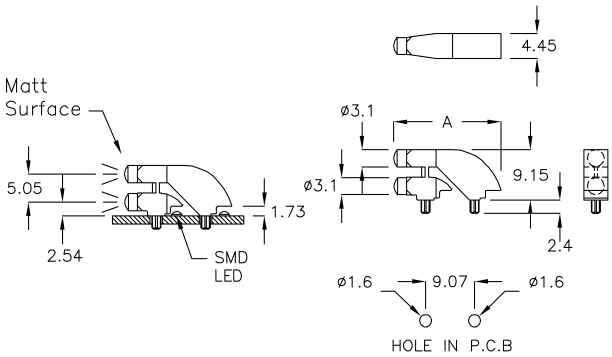

PART NO	A	P.C.B. THICKNESS	PACKAGE
LEJD−19K	19.85	1.6	500

导光柱 LIGHT PIPE 1-37-4

- MATERIAL: PC(UL)
- FLAME CLASS: 94V-2
- COLOR: CLEAR
- WITH M3 SCREW

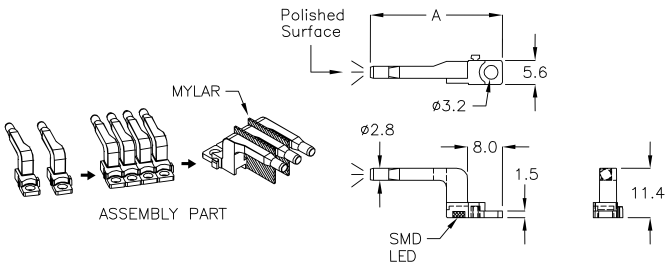

PART NO	A	PACKAGE
LEAD−29CT	30.5	500

返回图片索引

导光柱 LIGHT PIPE 1-38-1

- MATERIAL: PMMA
- COLOR: CLEAR

PART NO	A	PACKAGE
LEAD-2	37.5	500

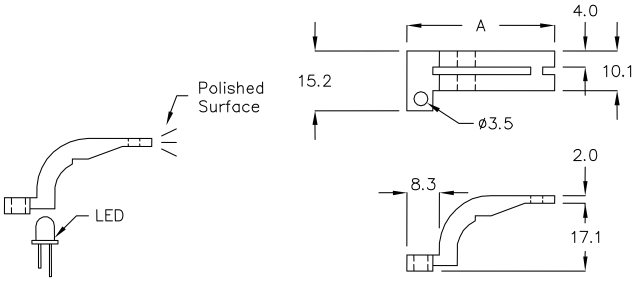

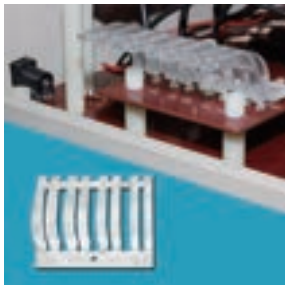

导光柱 LIGHT PIPE 1-38-2

- MATERIAL: PMMA
- COLOR: CLEAR

PART NO	A	PACKAGE
LEAD-8	37.5	100

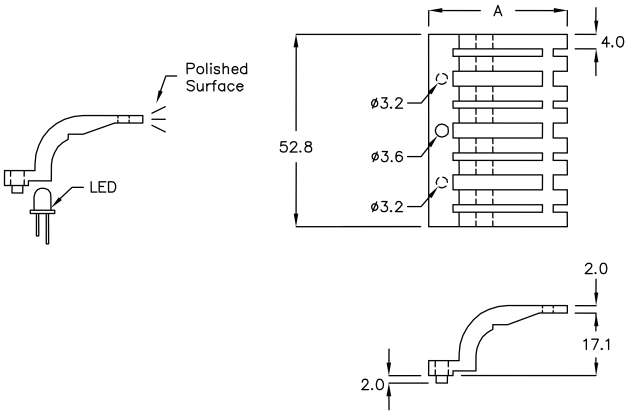

导光柱 LIGHT PIPE 1-38-3

- MATERIAL: PMMA
- COLOR: CLEAR

PART NO	A	B	PACKAGE
LEAD-10	41.5	23.3	500
LEAD-11	45.5	23.3	
LEAD-12	76.5	23.3	

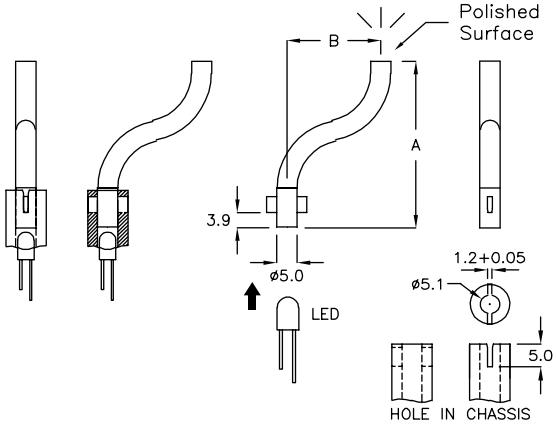

导光柱 LIGHT PIPE 1-38-4

- MATERIAL: PC(UL)
- FLAME CLASS: 94V-2
- COLOR: CLEAR

PART NO	A	PACKAGE
LEQD-13K	13.5	2000

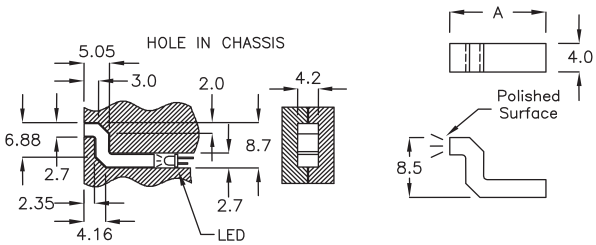

导光柱 LIGHT PIPE 1-38-5

- MATERIAL: PC(UL)
- FLAME CLASS: 94V-2
- COLOR: CLEAR

PART NO	A	PACKAGE
LECD-3K	3.0	1000

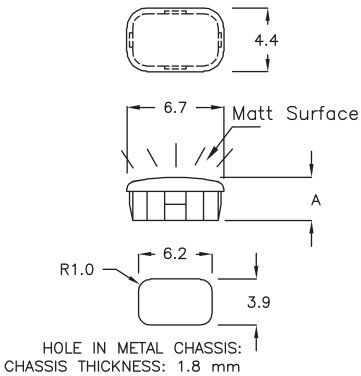

返回图片索引

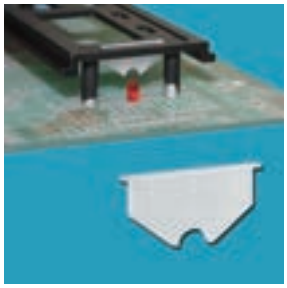

导光柱 LIGHT PIPE 1-39-1

- MATERIAL: PC(UL)
- FLAME CLASS: 94V-2
- COLOR: NATURAL

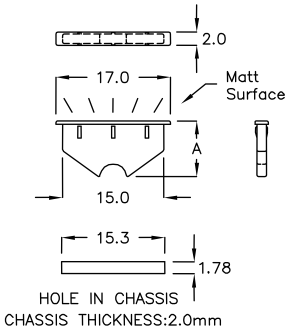

PART NO	A	PACKAGE
LEWA-17C	8.2	1000

导光柱 LIGHT PIPE 1-39-2

- MATERIAL: PMMA
- COLOR: CLEAR
- ADHESIVE TAPE: 3M

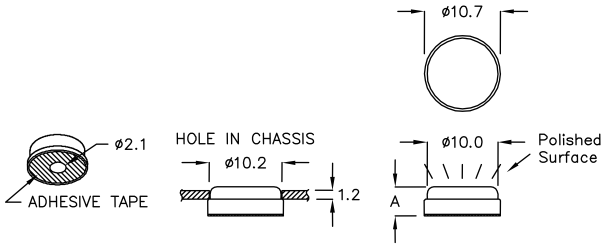

PART NO	A	PACKAGE
LERD-3K	4.03	2000

导光柱 LIGHT PIPE 1-39-3

- MATERIAL: PC(UL)
- FLAME CLASS: 94V-2
- COLOR: NATURAL
- ADHESIVE TAPE: 3M

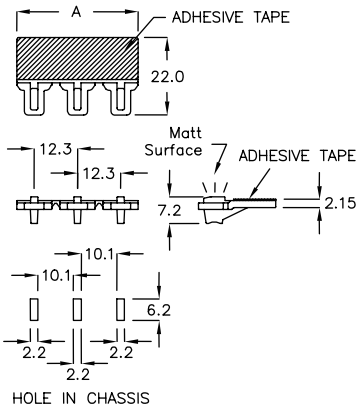

PART NO	A	PACKAGE
LEND-22A	34.6	200

导光柱 LIGHT PIPE 1-39-4

- MATERIAL: PC(UL)
- FLAME CLASS: 94V-2
- COLOR: NATURAL
- ADHESIVE TAPE: 3M

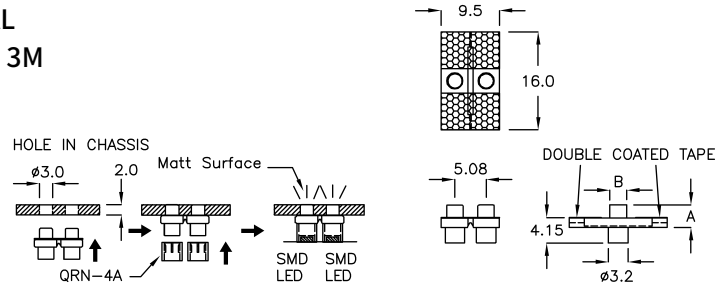

PART NO	A	B	PACKAGE
LEGD-2A	3.7	2xø2.7	1000
LEGD-2KM	3.3	2xø2.7	

返回图片索引

导光柱 LIGHT PIPE 1-40-1

- MATERIAL: PC(UL)
- FLAME CLASS: 94V-2
- COLOR: NATURAL
- ADHESIVE TAPE: 3M

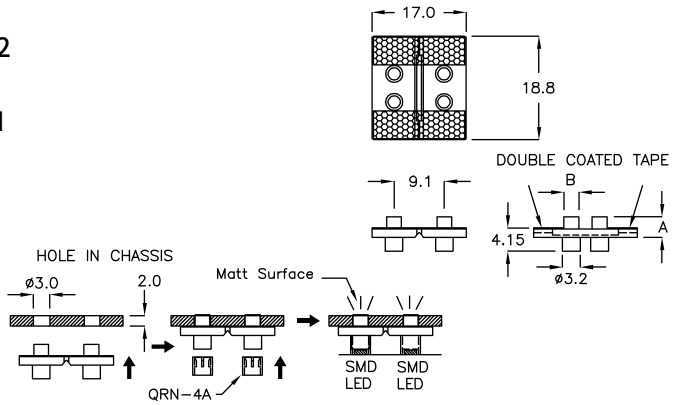

PART NO	A	B	PACKAGE
LEGD-4C	3.7	4xø2.7	1000
LEGD-4QN	3.3	4xø2.7	

遮光罩 LIGHT COVER 1-40-2

- MATERIAL: NYLON 66(UL)
- FLAME CLASS: 94V-0/94V-2
- COLOR: BLACK

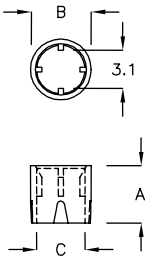

PART NO	A	B	C	PACKAGE
QRN-4A	4.7	ø5.0	ø4.0	2000

导光柱 LIGHT PIPE 1-40-3

- MATERIAL: PC(UL)
- FLAME CLASS: 94V-2
- COLOR: CLEAR

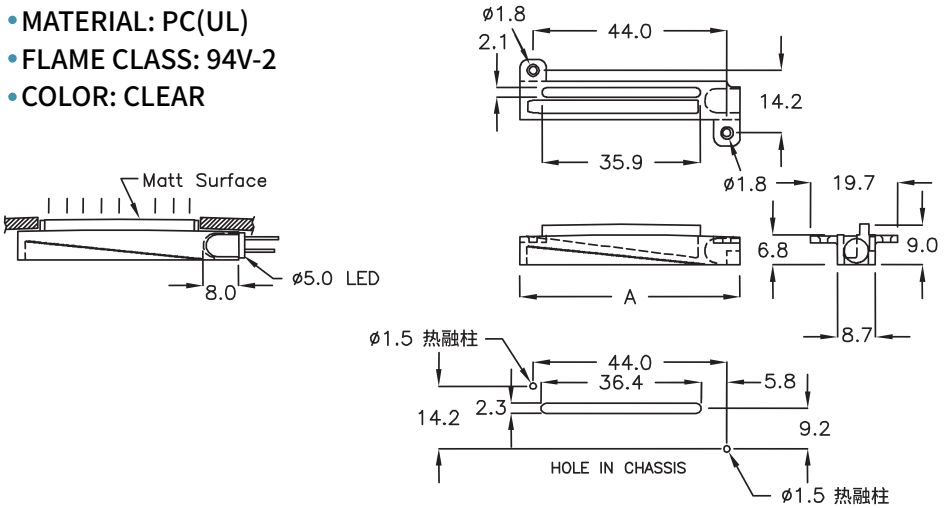

PART NO	A	PACKAGE
LEAD-1KC	50.0	500

导光柱 LIGHT PIPE 1-40-4

- MATERIAL: PC(UL)
- FLAME CLASS: 94V-2
- COLOR: CLEAR

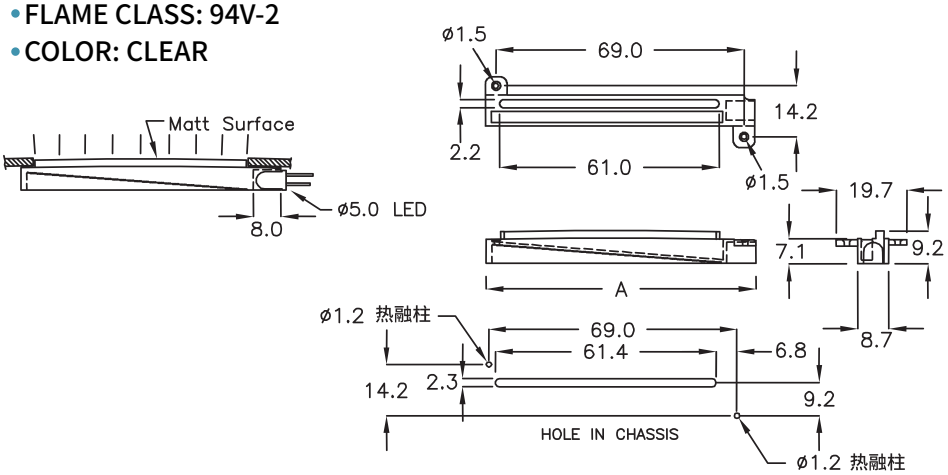

PART NO	A	PACKAGE
LEAD-1NJ	75.0	100

返回图片索引

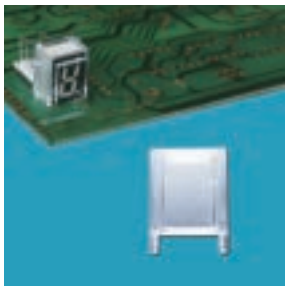

LED 导光罩 LED CAP 1-41-1

- MATERIAL: PC(UL)
- FLAME CLASS: 94V-0
- COLOR: NATURAL

PART NO	A	PACKAGE
LDHD-12MG	11.9	1000

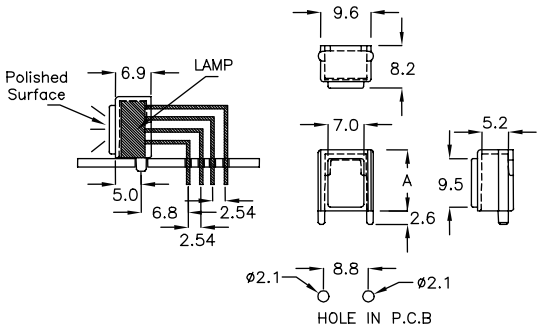

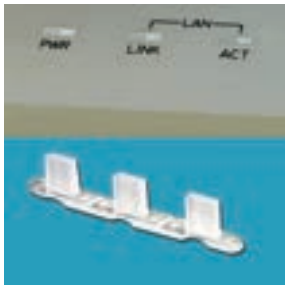

导光柱 LIGHT PIPE 1-41-2

- MATERIAL: PC(UL)
- FLAME CLASS: 94V-2
- COLOR: NATURAL

PART NO	A	B	C	PACKAGE
LEXD-67D	11.2	7.0	67.0	200

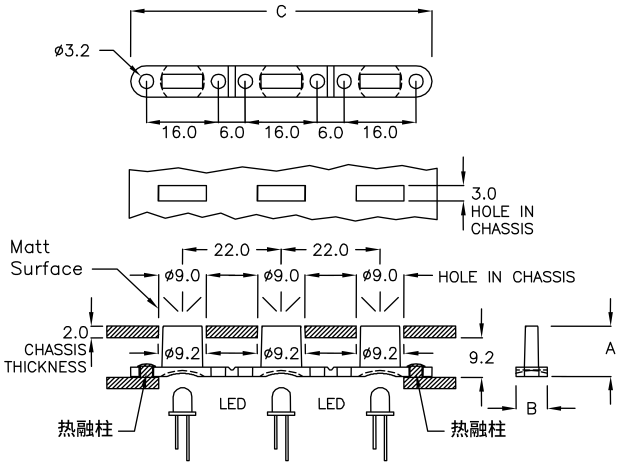

导光棒 LIGHT PIPE 1-41-3

- MATERIAL: PC(UL)
- FLAME CLASS: 94V-0
- COLOR: CLEAR

PART NO	C	PACKAGE
LDAD-45AT	44.9	2000

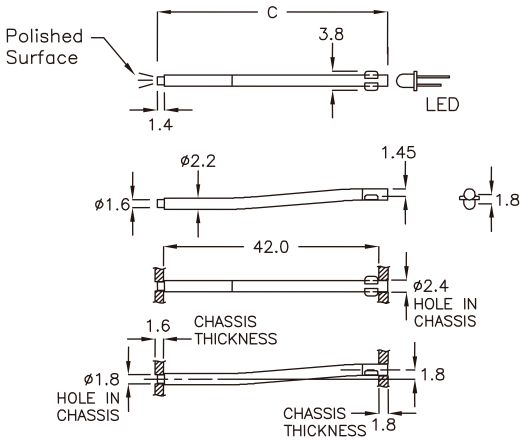

导光柱 LIGHT PIPE 1-41-4

- MATERIAL: PC(UL)
- FLAME CLASS: 94V-2
- COLOR: CLEAR

PART NO	A	B	C	PACKAGE
LEWF-28HS	6.0	ø4.95	28.8	500

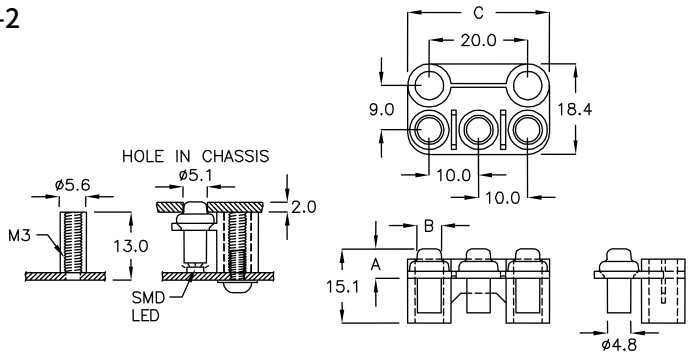

返回图片索引

导光柱 LIGHT PIPE 1-42-1

- MATERIAL: PC(UL)
- FLAME CLASS: 94V-2
- COLOR: CLEAR

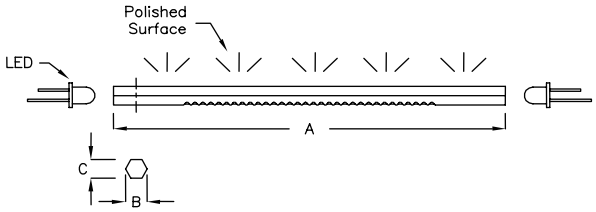

PART NO	A	B	C	PACKAGE
LEAD-50	113.0	2.75	2.38	200

导光柱 LIGHT PIPE 1-42-2

- MATERIAL: PC(UL)
- FLAME CLASS: 94V-2
- COLOR: CLEAR

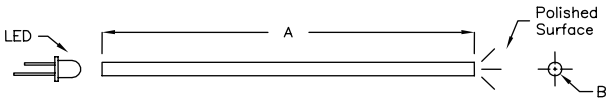

PART NO	A	B	PACKAGE
LEAD-81	81.0	ø3.0	500

导光柱 LIGHT PIPE 1-42-3

- MATERIAL: PC(UL)
- COLOR: CLEAR

NEW

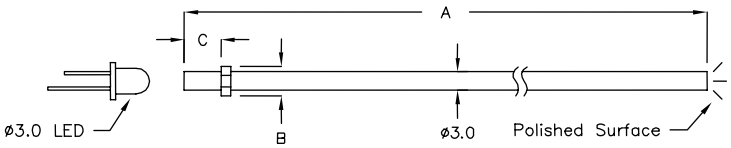

	PART NO	A	B	C	PACKAGE
★	LEAD-102C	101.9	4.8	5.9	500

返回图片索引

线扣
BUSHING

02

塞环
HOLE PLUG

护线环
SNAP BUSHING

电源线扣 STRAIN RELIEF BUSHING 2-2-1

- MATERIAL: NYLON 66(UL)
- FLAME CLASS: 94V-0/94V-2
- COLOR: BLACK

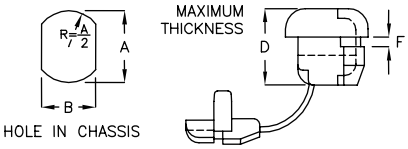

PG Cord Bushings are the easy and low-cost way to insulate and protect your AC Cords. Provide non-slip grip and will not damage the insulation of AC Cord.

E88476

PART NO	SUITABLE CABLE TYPE & DIMENSIONS OF CHASSIS						D PART LENGTH	UL	PACKAGE
	CROSS SECTION SHAPE	WIRE ACCOMMODATED	SIZE	A	B TO PREVENT ROTATION	F MAXIMUM THICKNESS			
2RF-2	FLAT	SPT-1	2.8x5.3	9.5	8.7	3.2	10.8	UL	500
3RF-1	FLAT	SPT-2	3.0x5.6	11.1	9.9	2.6	10.3		
3RF-2	FLAT	SPT-2	3.0x5.6	11.1	10.1	1.6	10.3	UL	
4RF-4	FLAT	SPT-2	3.0x5.6	12.7	11.5	2.5	11.2	UL	
4RF-5	FLAT	SPT-2	3.8x7.6	12.7	11.8	1.6	10.4	UL	
4RF-6	FLAT	SPT-2	3.0x6.5	12.5	11.6	2.7	10.5	UL	
5R-2	ROUND	SVI	7.6	12.7	11.5	1.6	11.3		
5R-4	ROUND	SV,SVT	6.4	12.7	11.5	1.6	11.3	UL	
5R-4A	ROUND	SV,SVT	6.4	12.7	11.5	2.5	11.0	UL	
5RF-4	FLAT	SPT-2	3.8x8.9	14.3	13.4	1.6	15.45	UL	200
		SPT-3	5.0x10.0						
6R-4	ROUND	SVI	7.6	15.9	14.0	1.6	14.9	UL	
6R-6	ROUND	SJ,SJT	8.2	15.9	14.0	1.6	14.5	UL	
6R-6A	ROUND	SJ,SJT	8.2	15.9	14.0	3.2	14.5		
7R-2	ROUND	S,ST	9.2-10.5	19.0	16.8	1.6	19.0	UL	100
			11.0	19.8					
7R-2A	ROUND	S,ST	9.2-10.5	19.0	16.8	3.2	19.0	UL	
			11.0	19.8					
7R-2LT	ROUND	SJT	9.6-10.0	19.0	16.8	1.0	15.0		
8R-2	ROUND	SJT	13.5-15.2	22.2	21.5	3.2	20.0	UL	
8R-2A	ROUND	SJT	13.5	23.0	22.0	2.0	19.9		
9R-2	ROUND	SJT	15.2-16.3	28.0	25.2	2.4	25.6		50
			17.5	30.2	25.2	6.7			
9R-2A	ROUND	SJT	15.5	28.0	25.2	2.4	14.5		100
9R-2B	ROUND	SJT	18.2	28.0	25.2	2.4	23.9		50

电源线扣 STRAIN RELIEF BUSHING 2-2-2

- MATERIAL: NYLON 66(UL)
- FLAME CLASS: 94V-0/94V-2
- COLOR: BLACK

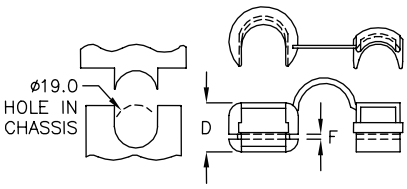

E88476

PART NO	SUITABLE CABLE TYPE & DIMENSIONS OF CHASSIS				D PART LENGTH	UL	PACKAGE
	CROSS SECTION SHAPE	WIRE ACCOMMODATED	SIZE	F MAXIMUM THICKNESS			
7R-7	ROUND	S.P.S	14.0	1.6	17.6	UL	100
7R-7B	ROUND	S.P.S	12.5	1.3	17.5		
7R-7C	ROUND	S.P.S	13.5	1.3	17.6		
7R-7E	ROUND	S.P.S	12.0	1.6	17.7		

返回图片索引

电源线扣 STRAIN RELIEF BUSHING 2-3-1

- MATERIAL: NYLON 66(UL)
- FLAME CLASS: 94V-0/94V-2
- COLOR: BLACK

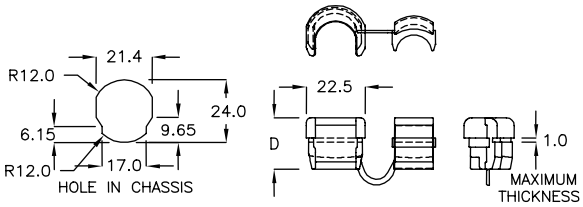

PART NO	D	WIRE ACCOMMODATED	PACKAGE
8R-2QT	19.8	ø15.0	100

电源线扣 STRAIN RELIEF BUSHING 2-3-2

- MATERIAL: NYLON 66(UL)
- FLAME CLASS: 94V-0/94V-2
- COLOR: BLACK

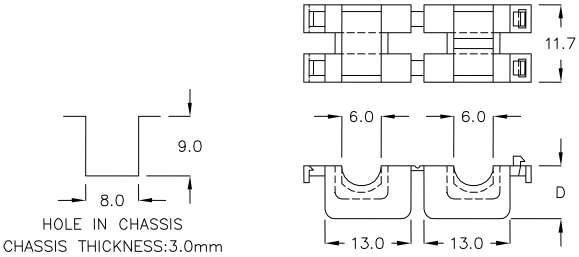

PART NO	D	PACKAGE
5R-1	8.0	200

电源线扣 STRAIN RELIEF BUSHING 2-3-3

- MATERIAL: NYLON 66(UL)
- FLAME CLASS: 94V-0/94V-2
- COLOR: BLACK

E88476

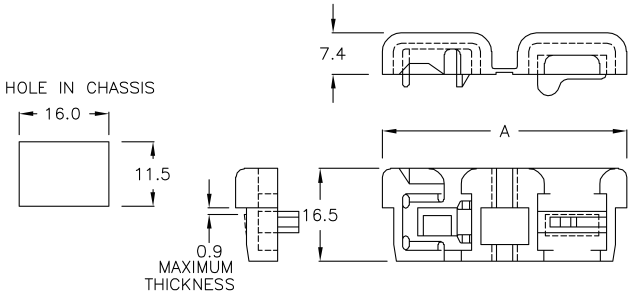

PART NO	A	WIRE ACCOMMODATED	UL	PACKAGE
5RF-5A	42.6	SPT-2	UL	200
5RF-5B	42.8	SPT-2	UL	
5RF-5D	42.8	SPT-2		

电源线扣 STRAIN RELIEF BUSHING 2-3-4

- MATERIAL: NYLON 66(UL)
- FLAME CLASS: 94V-0/94V-2
- COLOR: BLACK

E88476

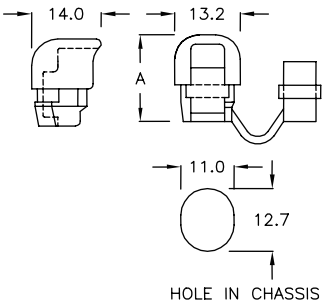

PART NO	WIRE ACCOMMODATED	MAXIMUM THICKNESS	A	UL	PACKAGE
5R-6	SPT-2(3x6.6)	2.5	17.6	UL	200
5R-7	SV(ø6)	2.5	17.7	UL	

返回图片索引

电源线扣 STRAIN RELIEF BUSHING 2-4-1

- MATERIAL: NYLON 66(UL)
- FLAME CLASS: 94V-0/94V-2
- COLOR: BLACK

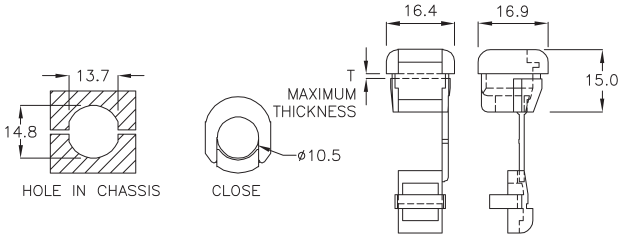

PART NO	MAXIMUM THICKNESS:T	PACKAGE
7R-2D	1.0	100

电源线扣 STRAIN RELIEF BUSHING 2-4-2

- MATERIAL: NYLON 66(UL)
- FLAME CLASS: 94V-0/94V-2
- COLOR: GRAY,BLACK

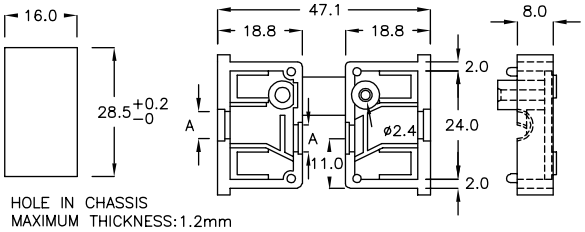

PART NO	A	PACKAGE
6R-9	ø6.0	100
6R-09C	ø8.5	200

电源线扣 STRAIN RELIEF BUSHING 2-4-3

- MATERIAL: NYLON 66(UL)
- FLAME CLASS: 94V-0/94V-2
- COLOR: BLACK

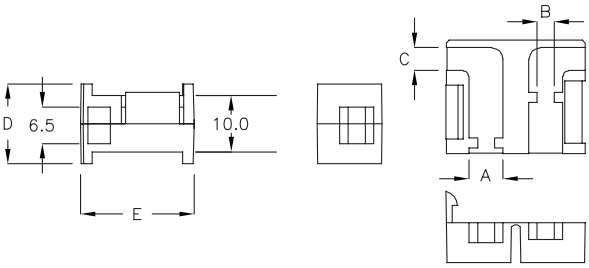

PART NO	A	B	C	D	E	PACKAGE
2RF-25	6.0	3.2	4.0	14.0	20.0	500

保护座 PROTECT HOUSING 2-4-4

- MATERIAL: NYLON 66(UL)
- FLAME CLASS: 94V-0/94V-2
- COLOR: NATURAL

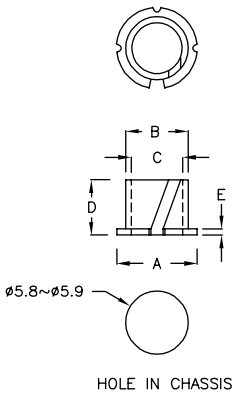

PART NO	A	B	C	D	E	PACKAGE
SG-05	ø8.0	ø6.2	ø5.05	5.4	0.6	2000

返回图片索引

保护座 PROTECT HOUSING 2-5-1

- MATERIAL: NYLON 66(UL)
- FLAME CLASS: 94V-0/94V-2
- COLOR: NATURAL

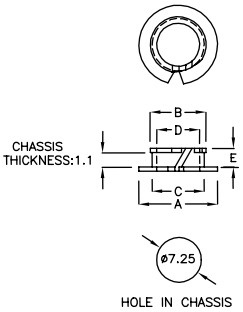

PART NO	A	B	C	D	E	PACKAGE
SG-0610A	ø11.0	ø7.8	ø7.3	ø6.0	3.2	1000

塞环 BUSHING 2-5-2

- MATERIAL: POM
- COLOR: BLACK

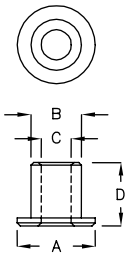

PART NO	A	B	C	D	PACKAGE
SLM-05	ø8.0	ø5.2	ø3.1	6.5	1000

护线环 SNAP BUSHING 2-5-3

- MATERIAL: NYLON 66(UL)
- FLAME CLASS: 94V-0/94V-2
- COLOR: NATURAL

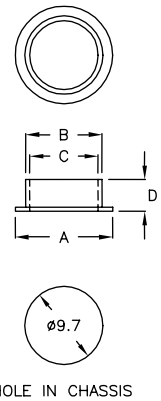

PART NO	A	B	C	D	PACKAGE
SL-0910	ø12.2	ø9.6	ø8.6	4.0	1000

护线环 SNAP BUSHING 2-5-4

- MATERIAL: NYLON 66(UL)
- FLAME CLASS: 94V-0/94V-2
- COLOR: BLACK

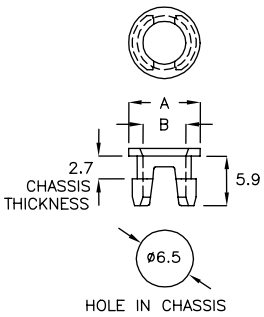

PART NO	A	B	PACKAGE
SBK-5AQ	8.5	5.1	1000

护线环 SNAP BUSHING 2-5-5

- MATERIAL: NYLON 66(UL)
- FLAME CLASS: 94V-0/94V-2
- COLOR: NATURAL

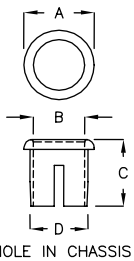

PART NO	A	B	C	D HOLE IN CHASSIS	PACKAGE
SBD-06	ø8.5	ø6.2	8.2	ø7.0	1000

返回图片索引

护线环 SNAP BUSHING 2-6-1

- MATERIAL: SILICONE
- FLAME CLASS: 94V-0
- COLOR: BLACK

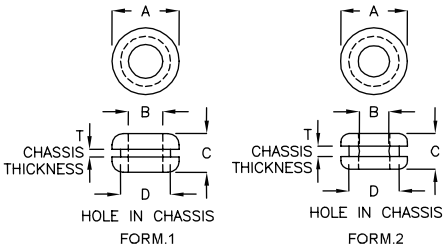

PART NO	A	B	C	D HOLE IN CHASSIS	T CHASSIS THICKNESS	FORM	PACKAGE
WSP-8QN	ø8.8	ø4.4	5.7	ø6.8	1.6	2	1000
WSP-12F	ø12.0	ø6.1	7.0	ø9.0	1.3	1	
WSP-12AC	ø12.8	ø6.8	6.8	ø10.0	1.4	2	2000
WSP-16BK	ø16.0	ø5.4	8.5	ø12.0	2.4	2	1000
WSP-16GR	ø16.0	ø7.1	7.5	ø12.0	1.4	2	
WSP-16C	ø16.0	ø7.1	8.5	ø12.0	2.4	2	
WSP-20K	ø20.0	ø8.2	8.5	ø16.0	2.4	2	500
WSP-20RY	ø20.0	ø6.8	8.5	ø16.0	2.4	2	

护线环 SNAP BUSHING 2-6-2

- MATERIAL: SILICONE
- FLAME CLASS: 94V-0
- COLOR: BLACK

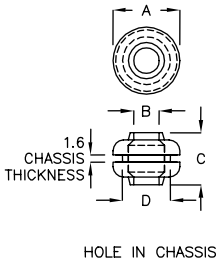

PART NO	A	B	C	D HOLE IN CHASSIS	PACKAGE
WSZ-9AC	ø9.4	ø3.1	8.5	ø7.0	1000
WSZ-12KM	ø12.6	ø4.8	9.8	ø8.9	
WSZ-13BR	ø13.9	ø5.3	9.7	ø10.4	
WSZ-14A	ø15.5	ø6.6	9.5	ø12.0	
WSZ-14DX	ø14.2	ø6.2	9.5	ø10.6	
WSZ-15DZ	ø15.5	ø6.9	9.7	ø12.0	
WSZ-16AM	ø16.0	ø7.4	9.7	ø12.5	

护线环 SNAP BUSHING 2-6-3

- MATERIAL: SILICONE
- COLOR: BLACK

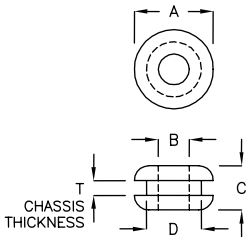

PART NO	A	B	C	D HOLE IN CHASSIS	T CHASSIS THICKNESS	PACKAGE
SB-0603	8.5	3.3	4.5	ø5.3	1.4	2000
SB-0806	10.5	5.5	5.5	ø7.5	1.4	1000
SB-1208	16.0	10.0	8.0	ø12.0	3.0	

返回图片索引

护线环 SNAP BUSHING 2-7-1

- MATERIAL: NYLON 66(UL)
- FLAME CLASS: 94V-0/94V-2
- COLOR: BLACK

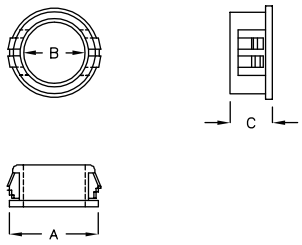

E88476

PART NO	CHASSIS THICKNESS	HOLE IN CHASSIS	A	B	C	UL	PACKAGE
SB-4757	3.6~6.4	ø57.2	63.1	47.1	18.3		50
SB-3845	1.5~3.2	ø44.5	47.7	35.3	11.6		100
SB-3338K	1.0~3.2	ø38.1	40.9	33.3	11.5		200
SB-3338	6.4	ø38.1	41.2	33.3	14.3		
SB-2634	1.0~2.8	ø34.2	38.0	26.2	11.5	UL	100
SB-2530	1.0~3.1	ø30.0	33.5	25.2	11.5		
SB-2428	1.0~3.3	ø28.0	31.5	24.1	11.3		200
SB-1822	0.9~2.3	ø22.0	24.8	18.2	11.5	UL	
SB-1519	1.0~3.0	ø19.0	21.7	15.3	11.1	UL	
SB-1316	1.4~3.5	ø16.0	18.0	12.8	10.4	UL	500
SB-1316K	0.8~1.8	ø16.0	18.0	12.8	10.4		
SB-1013	0.8~3.0	ø13.0	15.3	10.2	9.1	UL	
SB-0710	0.8~1.8	ø10.0	12.1	7.2	6.6	UL	1000
SB-0305	1.6~1.7	ø4.8	6.5	3.2	6.0		

开口式护线环 OPEN CLOSED BUSHING 2-7-2

- MATERIAL: NYLON 66(UL)
- FLAME CLASS: 94V-0/94V-2
- COLOR: BLACK

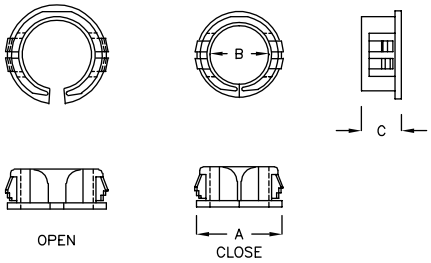

E88476

PART NO	CHASSIS THICKNESS	HOLE IN CHASSIS	A	B	C	UL	PACKAGE
SB-1822A	1.0~3.5	ø22.0	24.8	17.3	11.5	UL	200
SB-1922A	0.8~1.2	ø22.0	25.0	19.0	7.4		500
SB-1720A	0.8~1.0	ø20.0	23.5	17.0	7.2		
SB-1519A	1.2~3.3	ø19.0	20.6	14.4	11.0	UL	200
SB-1316A	1.2~3.5	ø16.0	18.0	10.5	10.5	UL	500
SB-1216A	0.7~3.3	ø16.0	18.6	12.3	10.0	UL	
SB-1013A	0.8~3.5	ø13.0	14.9	9.0	10.5	UL	
SB-0609A	0.7~1.7	ø9.5	11.4	6.6	6.5	UL	1000

返回图片索引

开口式护线环 OPEN CLOSED BUSHING——2-8-1

- MATERIAL: NYLON 66(UL)
- FLAME CLASS: 94V-0/94V-2
- COLOR: BLACK

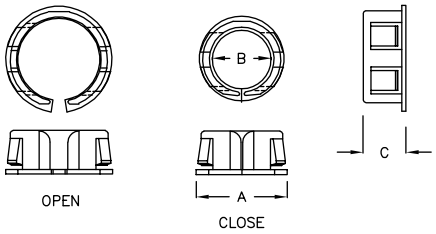

E88476

PART NO	CHASSIS THICKNESS	HOLE IN CHASSIS	A	B	C	UL	PACKAGE
SB-2126A	0.8~1.2	ø25.4~25.6	28.0	21.1	8.0		500
SB-2024A	0.8~1.2	ø24.0	26.4	20.0	11.3	UL	
SB-2228A	0.8~1.2	ø27.8	28.8	22.0	9.0		200

开口式护线环 OPEN CLOSED BUSHING——2-8-2

- MATERIAL: NYLON 66(UL)
- FLAME CLASS: 94V-0/94V-2
- COLOR: BLACK

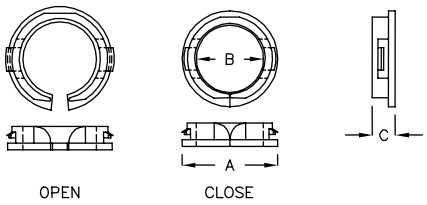

E88476

PART NO	A	B	C	CHASSIS THICKNESS	HOLE IN CHASSIS	UL	PACKAGE
SA-0204K	ø5.1	ø2.8	5.0	0.7~0.9	ø4.5		1000
SA-0407A	ø9.8	ø4.8	5.0	0.7~0.9	ø6.8~ø7.0	UL	
SA-0407T	ø9.8	ø4.8	5.2	0.4~1.0	ø6.8~ø7.0		
SA-1013C	ø15.5	ø9.6	5.9	1.9~2.0	ø13.0		500
SA-1013A	ø15.5	ø9.6	5.4	1.0~1.5	ø13.0	UL	
SA-1316A	ø18.4	ø12.5	5.4	1.0~1.4	ø16.0		
SA-1317Q	ø19.5	ø13.5	5.9	1.8~2.0	ø17.0		
SA-1519A	ø21.8	ø14.9	5.7	0.8~1.0	ø19.0	UL	
SA-1822A	ø24.6	ø17.6	5.6	0.8~1.0	ø22.0		
SA-2024A1	ø26.0	ø20.0	5.4	0.8~1.0	ø24.0		
SA-2024A	ø26.0	ø20.0	5.3	1.0~1.2	ø24.0		
SA-2327A	ø30.6	ø23.0	6.0	0.4~1.0	ø27.0~ø27.2		200

开口式护线环 OPEN CLOSED BUSHING——2-8-3

- MATERIAL: NYLON 66(UL)
- FLAME CLASS: 94V-0/94V-2
- COLOR: BLACK

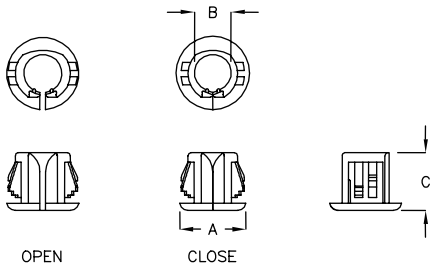

PART NO	A	B	C	CHASSIS THICKNESS	HOLE IN CHASSIS	PACKAGE
SB-0609C	ø11.8	ø6.1	9.8	1.0~3.5	ø9.5	1000

返回图片索引

开口式护线环 OPEN CLOSED BUSHING——2-9-1

- MATERIAL: NYLON 66(UL)
- FLAME CLASS: 94V-0/94V-2
- COLOR: BLACK

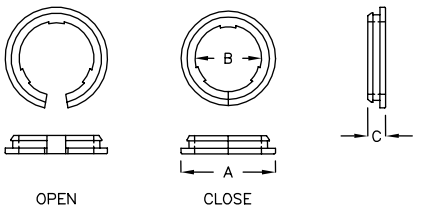

PART NO	A	B	C	CHASSIS THICKNESS	HOLE IN CHASSIS	PACKAGE
SYB-1316C	ø19.2	ø13.0	3.5	1.0	ø16.0	500

开口式护线环 OPEN CLOSED BUSHING——2-9-2

- MATERIAL: NYLON 66(UL)
- FLAME CLASS:94V-0/94V-2
- COLOR: BLACK

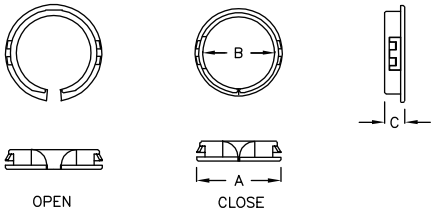

PART NO	CHASSIS THICKNESS	HOLE IN CHASSIS	A	B	C	PACKAGE
SY-2832A	0.8~1.4	ø32.0	35.1	28.2	6.7	200

开口式护线环 OPEN CLOSED BUSHING——2-9-3

- MATERIAL: NYLON 66(UL)
- FLAME CLASS: 94V-0/94V-2
- COLOR: BLACK

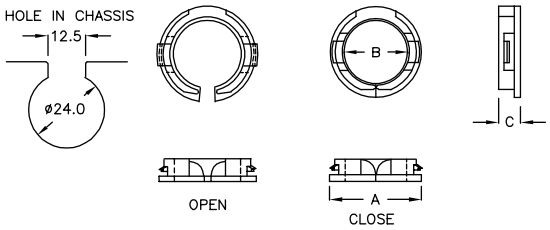

	MAXIMUM THICKNESS	A	B	C	PACKAGE
SA-2024C	0.8~1.1	26.0	20.0	5.3	500

开口式护线环 OPEN CLOSED BUSHING——2-9-4

- MATERIAL: NYLON 66(UL)
- FLAME CLASS: 94V-0/94V-2
- COLOR: BLACK

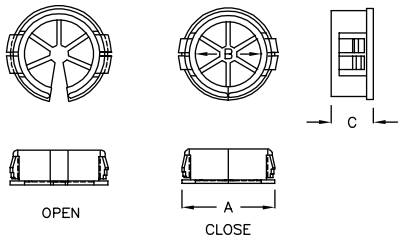

PART NO	MAXIMUM THICKNESS	HOLE IN CHASSIS	A	B	C	PACKAGE
SC-2128A	0.8~3.0	ø27.8~ø28.0	29.5	20.7	11.5	200
SC-1926A	0.8~3.0	ø25.4~ø25.5	27.0	19.0	11.5	
SC-1926C	0.8~1.0	ø25.4~ø25.5	27.0	19.0	5.3	500
SC-1422A	0.8~3.0	ø22.2~ø22.4	23.8	14.6	11.5	
SC-1319A	0.8~3.0	ø19.0~ø19.1	21.8	14.1	9.9	

返回图片索引

护线环 SNAP BUSHING 2-10-1

- MATERIAL: NYLON 66(UL)
- FLAME CLASS:94V-0/94V-2
- COLOR: BLACK

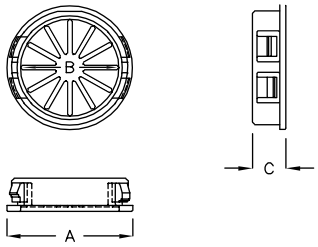

PART NO	CHASSIS THICKNESS	HOLE IN CHASSIS	A	B	C	PACKAGE
SS-3238	1.2~3.2	ø38.1~ø38.2	41.0	32.0	11.0	200

护线环 SNAP BUSHING 2-10-2

- MATERIAL: NYLON 66(UL)
- FLAME CLASS: 94V-0/94V-2
- COLOR: BLACK

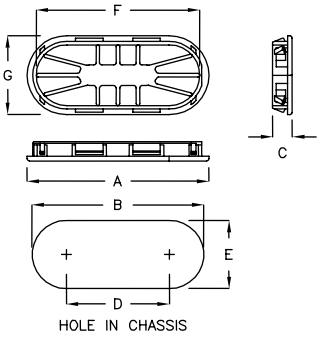

PART NO	CHASSIS THICKNESS	A	B	C	D	E	G	F	PACKAGE
SSK-7175	1.2	79.4	75.0	8.5	45.0	30.0	34.7	71.4	100
SSK-106110	1.2	115.4	110.0	8.5	60.0	50.0	55.7	106.4	

护线环 SNAP BUSHING 2-10-3

- MATERIAL: NYLON 66(UL)
- FLAME CLASS: 94V-0/94V-2
- COLOR: BLACK

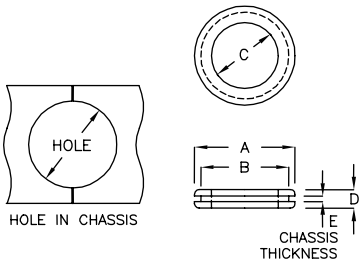

PART NO	HOLE IN CHASSIS	A	B	C	D	E CHASSIS THICKNESS	PACKAGE
SB-2114	ø18.0	ø21.2	ø18.0	ø14.1	4.0	1.0	1000

开口式护线环 OPEN CLOSED BUSHING 2-10-4

- MATERIAL: NYLON 66(UL)
- FLAME CLASS: 94V-0/94V-2
- COLOR: BLACK

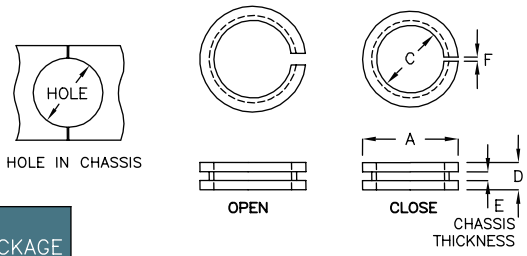

PART NO	HOLE IN CHASSIS	A	C	D	E CHASSIS THICKNESS	F	PACKAGE
SB-1223A	ø19.0	22.0	11.9	4.8	1.1	1.2~2.3	500
SB-1318A	ø14.8	18.0	12.8	6.1	2.2	0.7~1.3	
SB-1420A	ø16.0	18.9	13.6	3.65	1.5	0.3~0.8	

返回图片索引

方型护线环 EDGE SADDLE 2-11-1

- MATERIAL: NYLON 66(UL)
- FLAME CLASS: 94V-0/94V-2
- COLOR: NATURAL

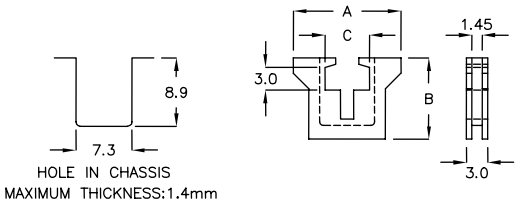

PART NO	A	B	C	PACKAGE
DS-7	14.0	10.65	5.8	1000

方型护线环 EDGE SADDLE 2-11-2

- MATERIAL: NYLON 66(UL)
- FLAME CLASS: 94V-0/94V-2
- COLOR: NATURAL

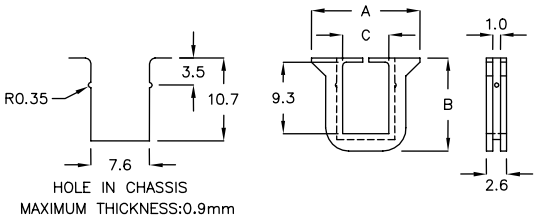

PART NO	A	B	C	PACKAGE
DS-8	14.0	12.0	6.0	2000

方型护线环 EDGE SADDLE 2-11-3

- MATERIAL: NYLON 66(UL)
- FLAME CLASS: 94V-0/94V-2
- COLOR: BLACK

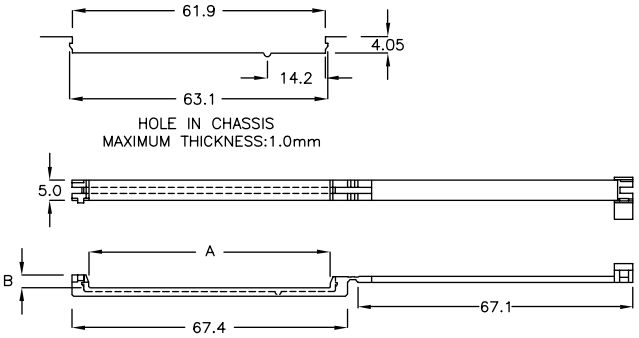

PART NO	A	B	PACKAGE
DDS-02	59.0	3.1	200

方型护线环 EDGE SADDLE 2-11-4

- MATERIAL: NYLON 66(UL)
- FLAME CLASS: 94V-0/94V-2
- COLOR: BLACK

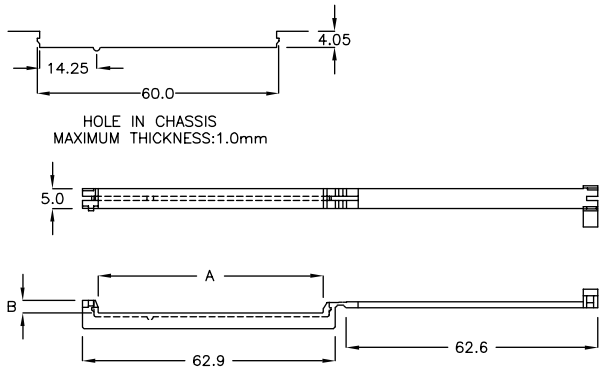

PART NO	A	B	PACKAGE
DDS-03	56.0	3.1	200

返回图片索引

方型护线环 EDGE SADDLE 2-12-1

- MATERIAL: NYLON 66(UL)
- FLAME CLASS: 94V-0/94V-2
- COLOR: BLACK

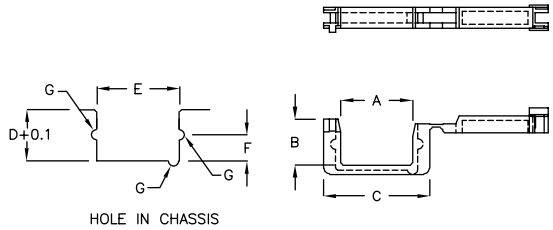

PART NO	A	B	C	D	E	F	G	MAXIMUM THICKNESS	PACKAGE
DDS-01	17.4	11.2	25.8	12.6	20.0	6.3	R1.4	2.1	500
DDS-06	28.0	6.6	36.6	9.0	31.0	3.3	R1.35	2.0	200

方型护线环 EDGE SADDLE 2-12-2

- MATERIAL: NYLON 66(UL)
- FLAME CLASS: 94V-0/94V-2
- COLOR: BLACK

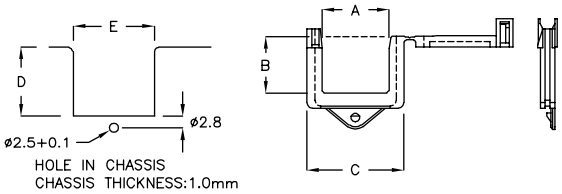

PART NO	A	B	C	D	E	PACKAGE
DDS-17	17.0	14.4	24.6	21.0	21.0	200
DDS-22	22.4	21.3	30.6	29.0	27.1	

方型护线环 EDGE SADDLE 2-12-3

- MATERIAL: NYLON 66(UL)
- FLAME CLASS: 94V-0/94V-2
- COLOR: NATURAL

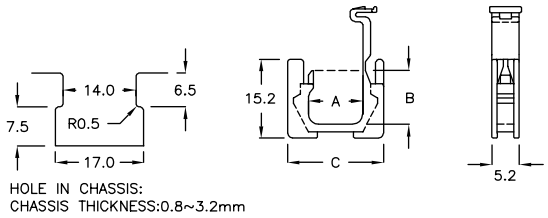

PART NO	A	B	C	PACKAGE
DSF-10A	10.5	10.8	18.5	500

方型护线环 EDGE SADDLE 2-12-4

- MATERIAL: NYLON 66(UL)
- FLAME CLASS: 94V-0/94V-2
- COLOR: NATURAL

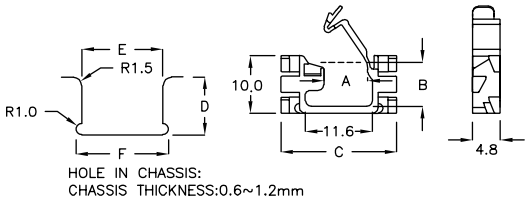

PART NO	A	B	C	D	E	F	PACKAGE
DSW-11A	7.6	7.7	20.0	10.0	14.0	16.0	1000

方型护线环 EDGE SADDLE 2-12-5

- MATERIAL: NYLON 66(UL)
- FLAME CLASS: 94V-0/94V-2
- COLOR: NATURAL

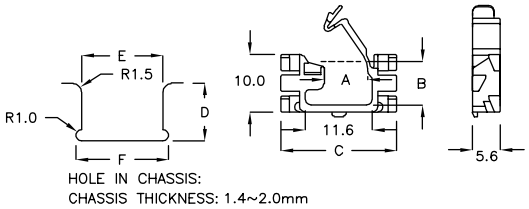

PART NO	A	B	C	D	E	F	PACKAGE
DSW-11MQ	7.6	7.7	20.0	10.0	14.0	16.0	1000

返回图片索引

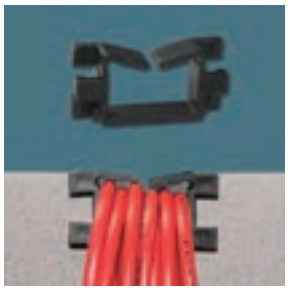

方型护线环 EDGE SADDLE 2-13-1

- MATERIAL: NYLON 66(UL)
- FLAME CLASS: 94V-0/94V-2
- COLOR: BLACK

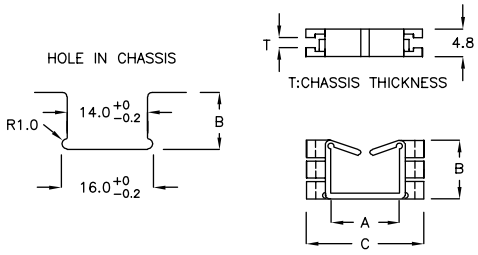

PART NO	A	B	C	T	PACKAGE
DS−1	12.0	10.0	20.2	0.9	1000
DS−3	12.0	10.0	20.2	1.9	

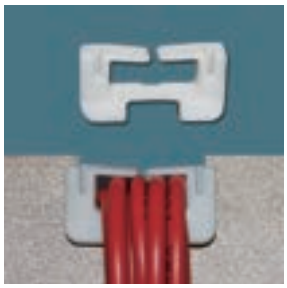

方型护线环 EDGE SADDLE 2-13-2

- MATERIAL: NYLON 66(UL)
- FLAME CLASS: 94V-0/94V-2
- COLOR: NATURAL

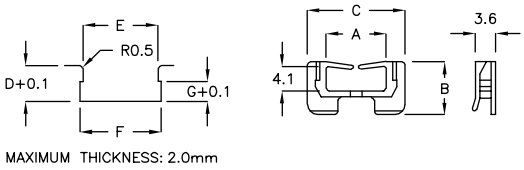

PART NO	A	B	C	D	E	F	G	PACKAGE
DS−02S	5.2	8.5	11.5	6.1	8.1	9.1	3.6	2000
DS−2	10.2	9.1	16.9	6.1	12.8	13.8	3.4	1000

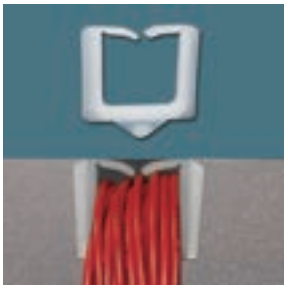

方型护线环 EDGE SADDLE 2-13-3

- MATERIAL: NYLON 66(UL)
- FLAME CLASS: 94V-0/94V-2
- COLOR: NATURAL

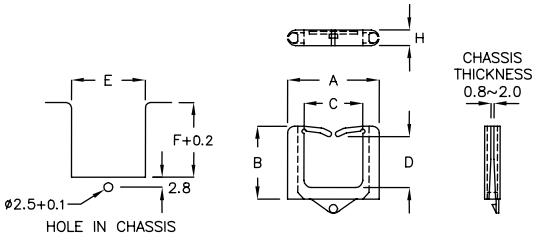

PART NO	A	B	C	D	E	F	H	PACKAGE
DS−11A	25.0	12.5	11.5	6.2	13.6 +0.1 −0	12.5	7.1	1000
DS−12	19.8	12.1	11.5	7.2	14.0 +0.1 −0	12.3	4.7	
DS−16TR	26.0	21.0	17.0	14.6	21.0 +0.2 −0	21.0	4.6	500
DS−23	33.1	29.2	22.4	21.8	27.0 +0.2 −0	29.0	4.7	

方型护线环 EDGE SADDLE 2-13-4

- MATERIAL: NYLON 66(UL)
- FLAME CLASS: 94V-0/94V-2
- COLOR: NATURAL,BLACK

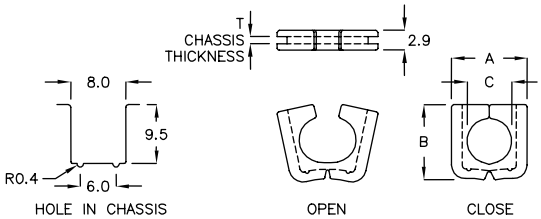

PART NO	A	B	C	T CHASSIS THICKNESS	PACKAGE
DS−4RT	11.0	10.9	ø6.6	0.7~0.8	1000

返回图片索引

方型护线环 EDGE SADDLE 2-14-1

- MATERIAL: NYLON 66(UL)
- FLAME CLASS: 94V-0/94V-2
- COLOR: NATURAL,BLACK

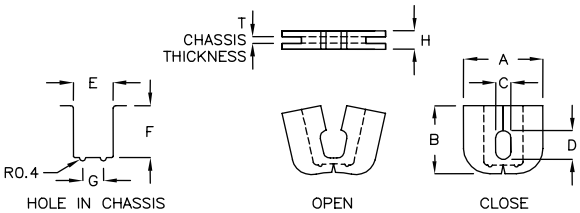

PART NO	A	B	C	D	E	F	G	H	R	T CHASSIS THICKNESS	PACKAGE
DS-04K	12.0	10.9	2.3	4.56	6.05	9.45	4.0	2.9	R0.4	0.8~1.0	1000
DS-4WY	12.5	11.5	2.4	4.8	7.2	10.3	4.35	2.5	R0.3	0.5~0.6	
DS-4KJ	12.0	10.9	2.6	5.2	6.05	9.45	4.0	2.9	R0.4	0.8~1.0	
DS-4YL	12.0	10.9	3.0	6.0	5.9	9.7	4.0	2.9	R0.5	0.8~1.0	
DS-4FR	16.0	10.9	2.65	5.3	9.9	9.7	8.0	2.9	R0.5	0.8~1.0	

方型护线环 EDGE SADDLE 2-14-2

- MATERIAL: NYLON 66(UL)
- FLAME CLASS: 94V-0/94V-2
- COLOR: NATURAL,BLACK

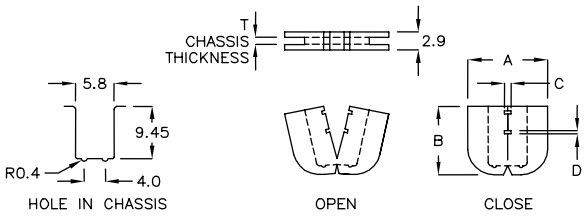

PART NO	A	B	C	D	T CHASSIS THICKNESS	PACKAGE
DS-04P	12.0	10.85	1.0	0.5	0.8~1.0	1000

方型护线环 EDGE SADDLE 2-14-3

- MATERIAL: NYLON 66(UL)
- FLAME CLASS: 94V-0/94V-2
- COLOR: NATURAL

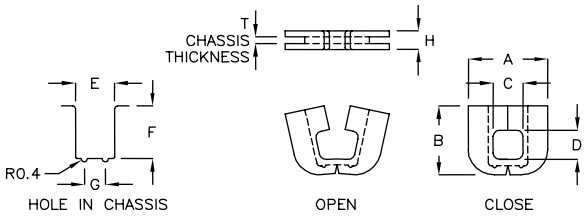

PART NO	A	B	C	D	E	F	G	H	T CHASSIS THICKNESS	PACKAGE
DS-04Q	12.0	10.9	4.6	4.6	5.9	9.45	4.0	2.9	0.8~1.0	1000
DS-04F	12.0	10.9	4.6	7.0	6.0	9.45	4.0	2.9	0.8~1.0	
DS-04R	12.0	10.9	6.5	7.0	8.0	9.5	6.0	2.9	0.8~1.0	
DS-4FA	12.0	10.9	4.5	7.0	6.1	9.45	4.0	2.9	0.4~0.6	
DS-4GL	13.3	10.9	6.9	7.0	8.3	9.5	6.3	3.0	0.6~0.8	
DS-06	14.6	8.8	7.0	4.6	8.3	7.4	6.4	2.9	0.8~1.0	

返回图片索引

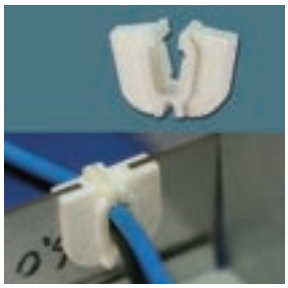

方型护线环 EDGE SADDLE 2-15-1

- MATERIAL: NYLON 66(UL)
- FLAME CLASS: 94V-0/94V-2
- COLOR: NATURAL,BLACK

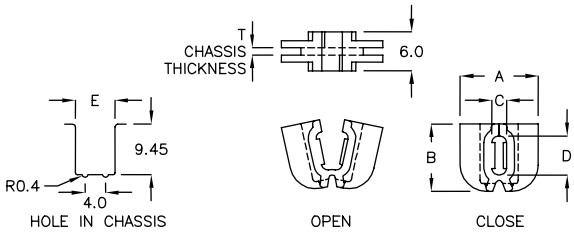

PART NO	A	B	C	D	E	T CHASSIS THICKNESS	PACKAGE
DS-04H	12.0	10.35	2.3	6.05	6.05	0.8~1.0	1000
DS-04J	12.0	10.4	4.6	4.6	6.0	0.8~1.0	
DS-04L	12.0	10.4	2.44	4.7	6.0	0.8~1.0	

方型护线环 EDGE SADDLE 2-15-2

- MATERIAL: NYLON 66(UL)
- FLAME CLASS: 94V-0/94V-2
- COLOR: BLACK

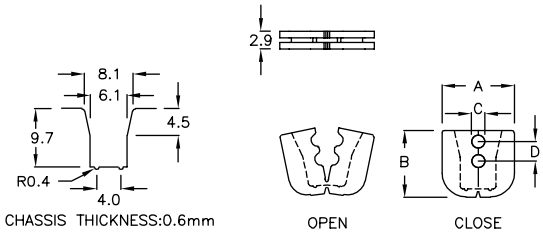

PART NO	A	B	C	D	PACKAGE
DS-4AD	12.0	11.1	ø2.2	3.2	1000

方型护线环 EDGE SADDLE 2-15-3

- MATERIAL: NYLON 66(UL)
- FLAME CLASS: 94V-0/94V-2
- COLOR: NATURAL,BLACK

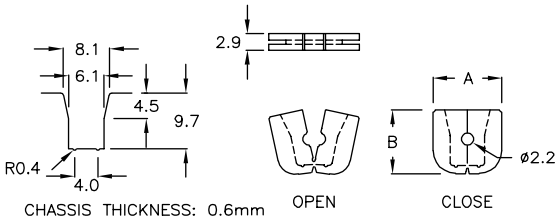

PART NO	A	B	PACKAGE
DS-4MP	12.0	11.1	1000

方型护线环 EDGE SADDLE 2-15-4

- MATERIAL: NYLON 66(UL)
- FLAME CLASS: 94V-0/94V-2
- COLOR: BLACK

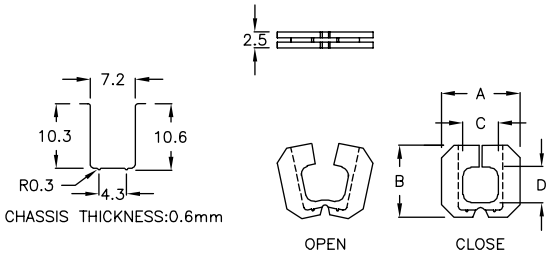

PART NO	A	B	C	D	PACKAGE
DS-4CF	12.5	11.5	4.3	6.5	1000
DS-4DG	12.5	11.5	4.3	4.3	
DS-4HQ	12.5	11.5	4.3	2.15	

返回图片索引

方型护线环 EDGE SADDLE 2-16-1

- MATERIAL: NYLON 66(UL)
- FLAME CLASS: 94V-0/94V-2
- COLOR: NATURAL,BLACK

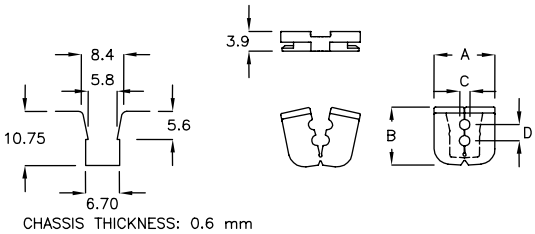

PART NO	A	B	C	D	PACKAGE
DSH-12K	12.2	11.55	ø2.1	3.2	1000

方型护线环 EDGE SADDLE 2-16-2

- MATERIAL: NYLON 66(UL)
- FLAME CLASS: 94V-0/94V-2
- COLOR: NATURAL,BLACK

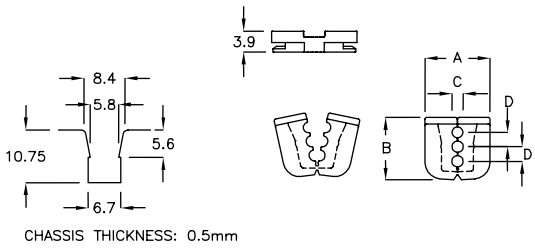

PART NO	A	B	C	D	PACKAGE
DSH-12HM	12.2	11.55	ø2.1	2.6	1000

方型护线环 EDGE SADDLE 2-16-3

- MATERIAL: NYLON 66(UL)
- FLAME CLASS: 94V-0/94V-2
- COLOR: BLACK

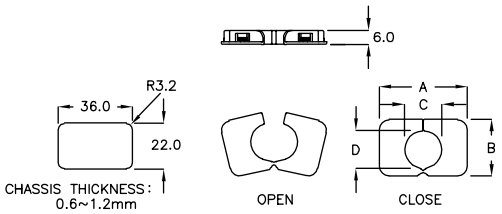

PART NO	A	B	C	D	PACKAGE
SAQ-16	37.8	24.0	16.0	16.0	200

方型护线环 EDGE SADDLE 2-16-4

- MATERIAL: NYLON 66(UL)
- FLAME CLASS: 94V-0/94V-2
- COLOR: BLACK

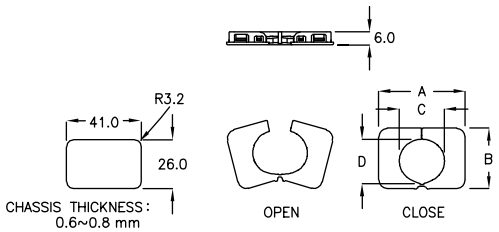

PART NO	A	B	C	D	PACKAGE
SAQ-20A	42.8	28.0	22.0	20.0	200

方型护线环 EDGE SADDLE 2-16-5

- MATERIAL: NYLON 66(UL)
- FLAME CLASS: 94V-0/94V-2
- COLOR: BLACK

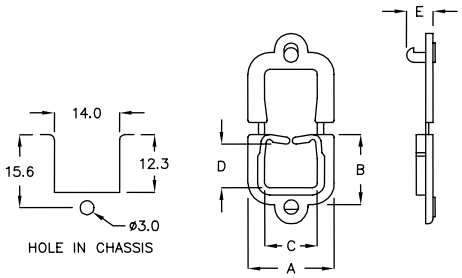

PART NO	A	B	C	D	E	MAXIMUM THICKNESS	PACKAGE
DS-10A	18.0	14.45	10.8	8.9	6.7	2.2	500
DS-10	18.5	14.5	11.0	8.6	6.0	1.6	
DS-10S	18.6	14.7	11.0	8.7	4.2	0.7	

返回图片索引

方型护线环 EDGE SADDLE 2-17-1

- MATERIAL: NYLON 66(UL)
- FLAME CLASS: 94V-0/94V-2
- COLOR: BLACK

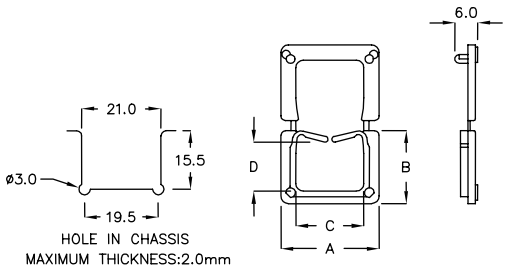

PART NO	A	B	C	D	PACKAGE
DS-14	26.2	20.0	18.0	12.8	500

方型护线环 EDGE SADDLE 2-17-2

- MATERIAL: NYLON 66(UL)
- FLAME CLASS: 94V-0/94V-2
- COLOR: BLACK

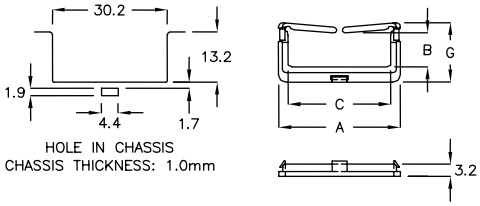

PART NO	A	B	C	G	PACKAGE
DS-27	32.0	9.0	27.0	15.6	500

方型护线环 EDGE SADDLE 2-17-3

- MATERIAL: NYLON 66(UL)
- FLAME CLASS: 94V-0/94V-2
- COLOR: BLACK

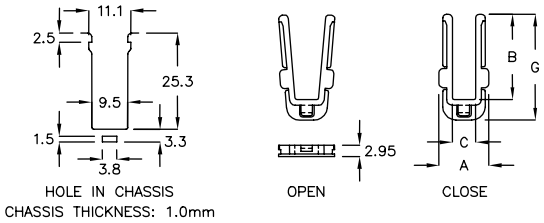

PART NO	A	B	C	G	PACKAGE
DSC-6FN	12.7	22.5	6.2	28.0	500

方型护线环 EDGE SADDLE 2-17-4

- MATERIAL: NYLON 66(UL)
- FLAME CLASS: 94V-0/94V-2
- COLOR: BLACK

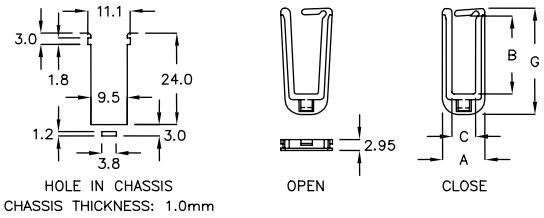

PART NO	A	B	C	G	PACKAGE
DSC-6GM	11.1	20.0	6.3	27.8	500

方型护线环 EDGE SADDLE 2-17-5

- MATERIAL: NYLON 66(UL)
- FLAME CLASS: 94V-0/94V-2
- COLOR: BLACK

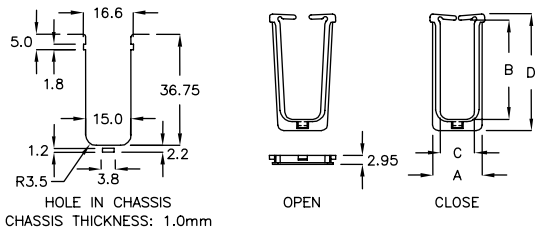

PART NO	A	B	C	D	PACKAGE
DSC-12NT	16.4	32.7	11.8	38.7	500

返回图片索引

方型护线环 EDGE SADDLE 2-18-1

- MATERIAL: NYLON 66(UL)
- FLAME CLASS: 94V-0/94V-2
- COLOR: NATURAL

PART NO	A	B	C	T CHASSIS THICKNESS	PACKAGE
CT-16	27.9	6.8	16.0	2.0	500

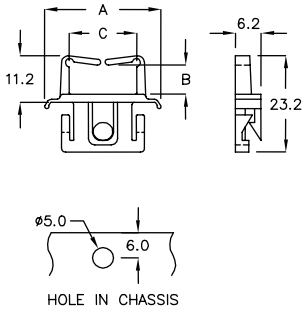

保护盖 HOLE PROTECT COVER 2-18-2

- MATERIAL: NYLON 66(UL)
- FLAME CLASS: 94V-0 / 94V-2
- COLOR: NATURAL

PART NO	A	B	C	D	T CHASSIS THICKNESS	PACKAGE
BH-8	25.0	10.0	20.0	ø3.2	1.0	1000
BH-9	46.0	12.0	34.0	ø3.5	0.8	
BH-10	35.0	16.0	25.0	ø3.1	1.6	
BH-10A	35.0	16.0	25.0	ø3.1	2.6	
BH-10C	42.0	16.0	32.0	ø3.2	3.6	
BH-51A	51.0	10.0	46.0	ø3.2	0.8	200

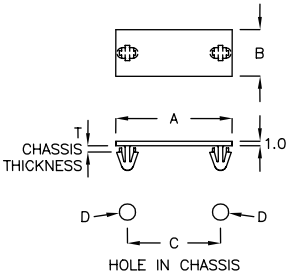

保护盖 HOLE PROTECT COVER 2-18-3

- MATERIAL: NYLON 66(UL)
- FLAME CLASS: 94V-0/94V-2
- COLOR: BLACK

PART NO	A	B	C	D	PACKAGE
BHA-03	21.3	15.2	2.0	8.0	500

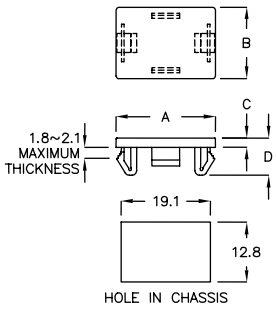

保护盖 HOLE PROTECT COVER 2-18-4

- MATERIAL: NYLON 66(UL)
- FLAME CLASS: 94V-0/94V-2
- COLOR: BLACK

PART NO	A	B	C	D	PACKAGE
BHA-01	21.0	15.0	2.0	6.0	500

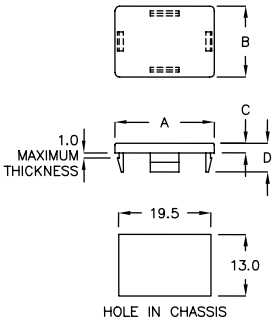

返回图片索引

保护盖 HOLE PROTECT COVER 2-19-1

- MATERIAL: NYLON 66(UL)
- FLAME CLASS: 94V-0/94V-2
- COLOR: NATURAL

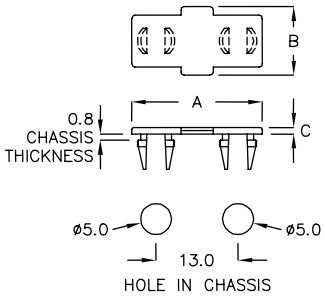

PART NO	A	B	C	PACKAGE
BH-011	20.3	10.6	1.0	1000

保护盖 HOLE PROTECT COVER 2-19-2

- MATERIAL: NYLON 66(UL)
- FLAME CLASS: 94V-0/94V-2
- COLOR: BLACK,NATURAL

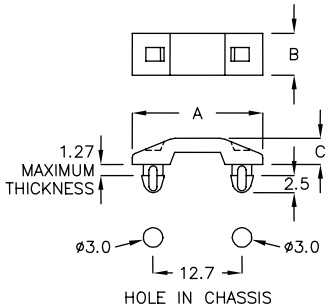

PART NO	A	B	C	PACKAGE
BH-019	18.7	6.0	3.7	1000

端子保护盖 CONNECTOR COVER 2-19-3

- MATERIAL: NYLON 66(UL)
- FLAME CLASS: 94V-0/94V-2
- COLOR: NATURAL

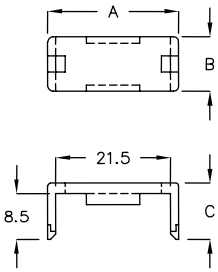

PART NO	A	B	C	PACKAGE
BH-012	24.5	10.2	10.5	500

护线套 EDGING 2-19-4

- MATERIAL: NYLON 66(UL)
- FLAME CLASS: 94V-0/94V-2
- COLOR: BLACK

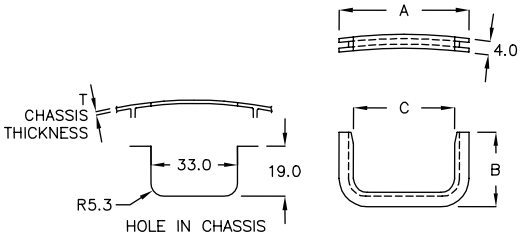

PART NO	A	B	C	T CHASSIS THICKNESS	PACKAGE
DDS-04	37.9	21.65	29.5	1.3	500

返回图片索引

护线套 EDGING 2-20-1

- MATERIAL: NYLON 66(UL)
- FLAME CLASS: 94V-0/94V-2
- COLOR: BLACK

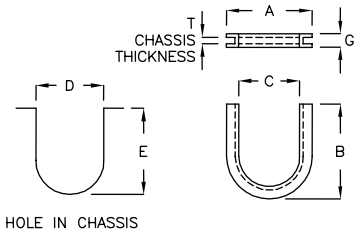

PART NO	A	B	C	D	E	G	T CHASSIS THICKNESS	PACKAGE
UST-01	24.2	26.8	17.2	19.2	25.0	3.85	1.6	500
UST-02	24.0	21.0	16.0	18.0	18.0	3.8	1.7	
UST-03	21.4	29.7	16.0	17.8	27.9	3.0	0.8	
UST-04	16.0	16.0	10.0	12.0	14.0	3.4	1.3	
UST-05	21.4	27.5	16.0	17.8	25.7	3.0	1.0	
UST-06	31.3	36.5	21.3	26.0	35.0	3.8	1.6	
UST-07	31.3	36.8	21.3	26.1	34.2	4.3	1.7	
UST-08	28.3	29.5	20.7	22.0	26.7	4.0	1.6~1.8	
UST-12	24.0	21.0	16.0	18.0	18.0	3.3	1.0	

护线套 EDGING 2-20-2

- MATERIAL：NYLON 66(UL)
- FLAME CLASS：94V-0/94V-2
- COLOR：BLACK

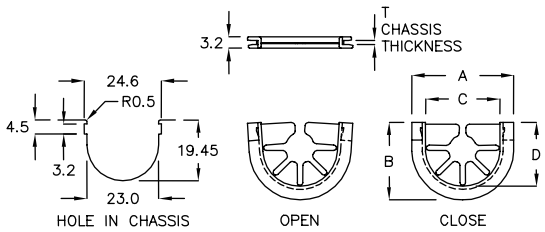

PART NO	A	B	C	D	T CHASSIS THICKNESS	PACKAGE
USK-21A	29.0	22.1	21.2	18.0	1.0	500

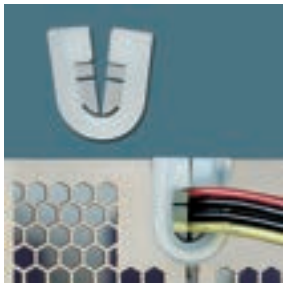

方型护线环 EDGE SADDLE 2-20-3

- MATERIAL: NYLON 66(UL)
- FLAME CLASS: 94V-0/94V-2
- COLOR: NATURAL

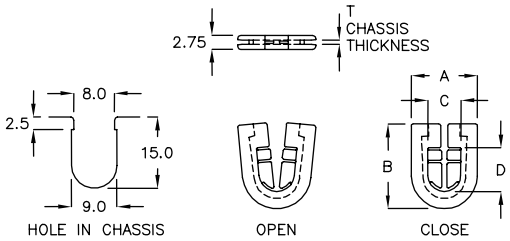

PART NO	A	B	C	D	T CHASSIS THICKNESS	PACKAGE
USM-6KP	13.0	16.8	6.4	8.7	0.6	1000

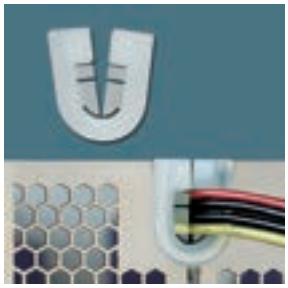

方型护线环 EDGE SADDLE 2-20-4

- MATERIAL: NYLON 66(UL)
- FLAME CLASS: 94V-0/94V-2
- COLOR: NATURAL

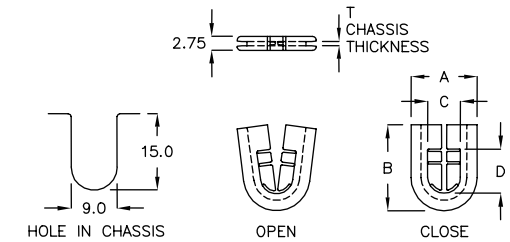

PART NO	A	B	C	D	T CHASSIS THICKNESS	PACKAGE
USM-6M	13.0	16.8	6.4	8.7	0.6	1000

返回图片索引

方型护线环 EDGE SADDLE 2-21-1

- MATERIAL: TPE
- COLOR: BLACK

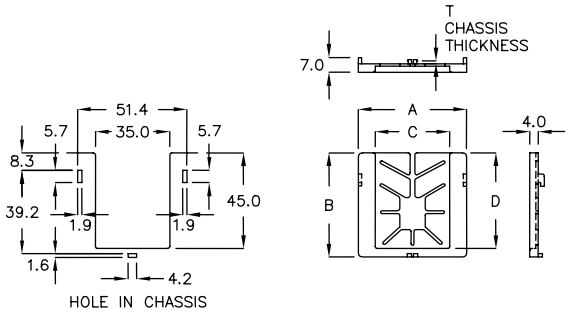

PART NO	A	B	C	D	T CHASSIS THICKNESS	PACKAGE
USCF-51G	51.0	49.0	35.0	45.0	1.0	200

护线套 EDGING 2-21-2

- MATERIAL: NYLON 66(UL)
- FLAME CLASS:94V-0/94V-2
- COLOR: BLACK

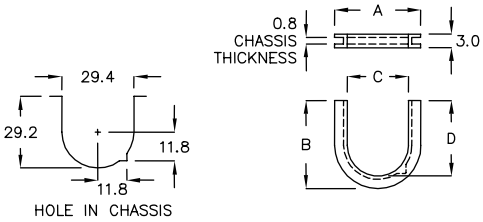

PART NO	A	B	C	D	PACKAGE
UST-27Q	35.1	31.7	27.4	27.8	500

方型护线环 EDGE SADDLE 2-21-3

- MATERIAL: NYLON 66(UL)
- FLAME CLASS: 94V-0/94V-2
- COLOR: BLACK

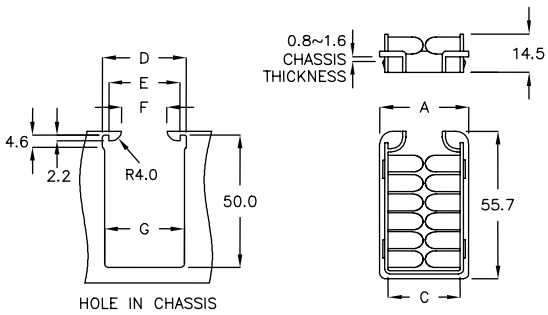

PART NO	A	C	D	E	F	G	PACKAGE
USC-27KH	33.6	27.2	31.6	26.8	17.0	30.0	100
USC-37FG	43.6	37.2	41.6	36.8	29.2	40.0	

返回图片索引

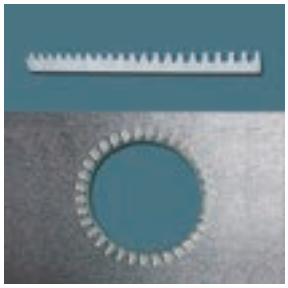

活动护线套 MOVABLE BUSHING 2-22-1

- MATERIAL: NYLON 66(UL)
- FLAME CLASS: 94V-0/94V-2
- COLOR: NATURAL

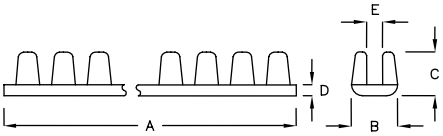

PART NO	A	B	C	D	E	SUITABLE THICKNESS	PACKAGE
US-12.31	31.2	3.2	4.0	1.2	1.1	1.2	2000
US-116.7	66.5	3.7	3.9	1.0	1.0	1.2	
US-127.9	79.0	3.2	4.3	1.3	1.2	1.3	1000
US-2010	100.0	4.4	4.3	1.3	2.0	2.0	
US-0725	255.0	3.2	4.6	1.7	0.7	0.7	
US-0926	260.0	3.1	3.8	0.8	0.9	1.0	
US-1125	256.0	3.4	4.4	1.6	1.0	1.1	
US-1126	265.0	3.5	4.4	1.6	0.9	1.0	
US-1225	256.0	3.2	4.2	1.4	1.2	1.3	
US-1317	176.0	3.7	4.3	1.3	1.3	1.5	
US-1325	256.0	3.7	4.3	1.3	1.3	1.5	
US-1725	256.0	4.2	4.4	1.4	1.6	1.7	500
US-2025	256.0	4.4	4.3	1.4	2.0	2.1	
US-2425	256.0	5.2	4.6	1.7	2.4	2.4	
US-3025	255.0	5.8	4.5	1.25	3.0	3.2	
US-3525	256.0	6.2	5.5	2.3	3.4	3.6	200

塞环 HOLE PLUG 2-22-2

- MATERIAL: NYLON 66(UL)
- FLAME CLASS: 94V-0 / 94V-2
- COLOR: BLACK

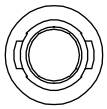

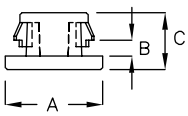

PART NO	CHASSIS THICKNESS	HOLE IN CHASSIS	A	B	C	PACKAGE
M-8A	1.6	ø8.5	ø11.5	1.8	6.6	1000

返回图片索引

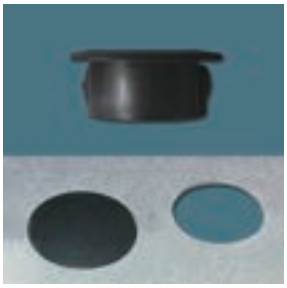

塞环 HOLE PLUG 2-23-1

- MATERIAL: NYLON 66(UL)
- FLAME CLASS: 94V-0/94V-2
- COLOR: BLACK

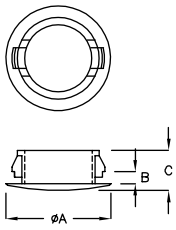

PART NO	MAXIMUM THICKNESS	HOLE IN CHASSIS	A	B	C	PACKAGE
M-3K	1.6	ø3.0~ø3.1	5.2	1.65	4.3	2000
M-3LM	1.6	ø3.4~ø3.6	5.6	1.8	4.3	
M-4DR	1.6	ø3.9~ø4.1	5.8	1.65	5.0	
M-4MF	1.6	ø4.4~ø4.6	6.0	1.65	5.0	
M-4	1.6	ø4.7~ø4.9	6.0	1.8	5.2	
M-5	1.0	ø4.95~ø5.0	7.5	1.3	5.7	
M-6	1.6	ø6.3~ø6.5	7.6	1.8	5.6	
M-6A	1.6	ø6.2~ø6.5	8.0	1.85	8.0	1000
M-7	1.6	ø7.0~ø7.1	11.0	1.9	7.0	
M-8	1.6	ø7.6~ø8.0	9.5	1.8	6.0	
M-9	1.2	ø9.5~ø9.6	13.0	2.0	6.5	
M-10	1.4	ø9.6~ø10.0	13.0	1.8	6.0	
M-11A	1.4	ø11.45~ø11.55	18.6	2.0	7.0	
M-11DC	0.8	ø11.2~ø11.25	15.0	1.35	6.9	
M-13	2.1	ø12.7~ø13.0	17.0	2.3	8.0	
M-16	2.0	ø15.9~ø16.0	20.0	2.3	7.7	500

塞环 HOLE PLUG 2-23-2

- MATERIAL: NYLON 66(UL)
- FLAME CLASS: 94V-0 / 94V-2
- COLOR: BLACK

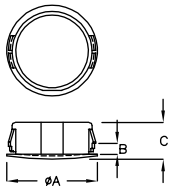

PART NO	MAXIMUM THICKNESS	HOLE IN CHASSIS	A	B	C	PACKAGE
M-15	1.6	ø15.0~ø15.1	16.8	1.8	7.0	500
M-19	3.2	ø18.9~ø19.0	23.5	3.5	10.5	
M-22	3.0	ø21.9~ø22.0	26.0	3.4	9.6	
M-22C	3.5	ø21.9~ø22.0	25.8	3.7	11.7	200
M-25	3.2	ø25.4~ø25.6	28.0	4.0	12.7	
M-28A	3.5	ø28.3~ø28.4	32.0	3.9	13.1	
M-30	3.2	ø30.5~ø30.6	34.0	4.0	13.0	
M-32	2.2	ø32.0~ø32.1	35.7	2.6	13.0	

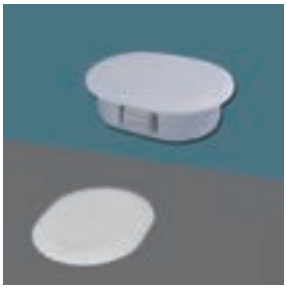

塞环 HOLE PLUG 2-23-3

- MATERIAL: NYLON 66(UL)
- FLAME CLASS: 94V-0/94V-2
- COLOR: NATURAL,BLACK

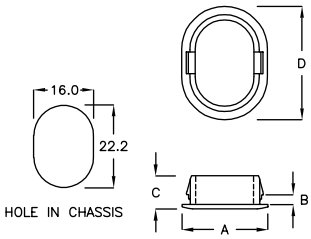

PART NO	MAXIMUM THICKNESS	A	B	C	D	PACKAGE
M-22A	2.0	19.4	2.2	7.5	25.6	200

返回图片索引

塞头 HOLE PLUG 2-24-1

- MATERIAL: NYLON 66(UL)
- FLAME CLASS: 94V-0/94V-2
- COLOR: BLACK

PART NO	MAXIMUM THICKNESS	A	B	PACKAGE
MU-9JP	3.4	ø12.0	10.5	1000

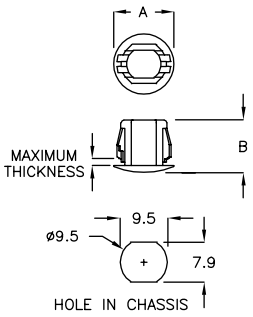

保护盖 HOLE PROTECTOR 2-24-2

- MATERIAL: NYLON 66(UL)
- FLAME CLASS: 94V-0/94V-2
- COLOR: BLACK

PART NO	A	B	PACKAGE
MBF-01	ø8.9	4.9	1000

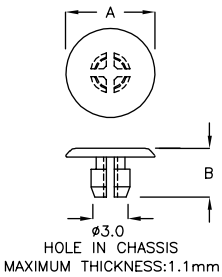

塞头 HOLE PLUG 2-24-3

- MATERIAL: NYLON 66(UL)
- FLAME CLASS: 94V-0/94V-2
- COLOR: NATURAL

PART NO	A	B	PACKAGE
MHG-1A	ø6.2	5.0	2000

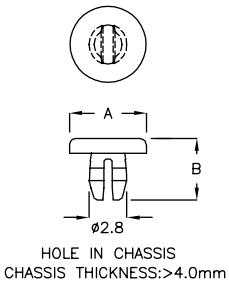

塞头 HOLE PLUG 2-24-4

- MATERIAL: NYLON 66(UL)
- FLAME CLASS: 94V-0/94V-2
- COLOR: BLACK

PART NO	A	B	PACKAGE
MHG-02	ø6.0	6.0	2000

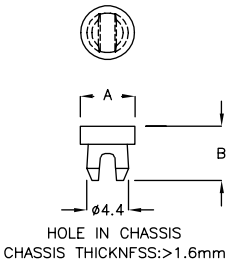

塞头 HOLE PLUG 2-24-5

- MATERIAL: NYLON 66(UL)
- FLAME CLASS: 94V-0/94V-2
- COLOR: BLACK

PART NO	A	B	PACKAGE
MMD-01	14.4	7.5	1000

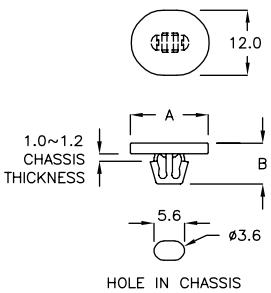

返回图片索引

塞头 HOLE PLUG 2-25-1

- MATERIAL: NYLON 66(UL)
- FLAME CLASS:94V-0/94V-2
- COLOR: BLACK

PART NO	A	B	PACKAGE
MHG-04	ø13.4	7.9	2000

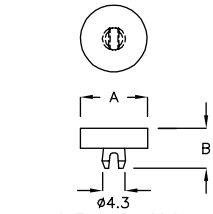

HOLE IN CHASSIS
CHASSIS THICKNESS: >4.0mm

塞头 HOLE PLUG 2-25-2

- MATERIAL: NYLON 66(UL)
- FLAME CLASS: 94V-0 / 94V-2
- COLOR: NATURAL

PART NO	A	B	PACKAGE
MHG-4A	ø9.5	8.0	2000

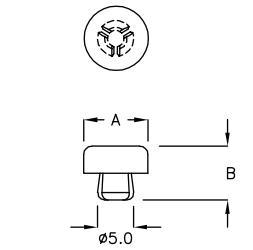

HOLE IN CHASSIS
CHASSIS THICKNFSS: >4.0mm

塞头 HOLE PLUG 2-25-3

- MATERIAL: TPE
- COLOR: BLACK

PART NO	A	B	PACKAGE
MPL-05	ø5.0	4.0	2000

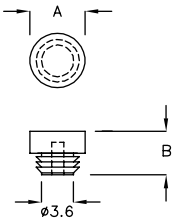

HOLE IN CHASSIS:
CHASSIS THICKNESS: >2.0mm

塞头 HOLE PLUG 2-25-4

- MATERIAL: TPE
- COLOR: BLACK

PART NO	A	B	PACKAGE
MPL-21Q	ø21.8	12.0	100

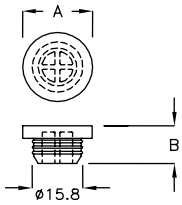

HOLE IN CHASSIS
CHASSIS THICKNESS: >8.0mm

塞头 HOLE PLUG 2-25-5

- MATERIAL: TPE
- COLOR: BLACK

PART NO	A	B	PACKAGE
MPZ-6Q	ø6.0	4.7	2000

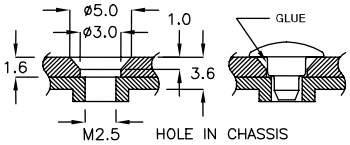

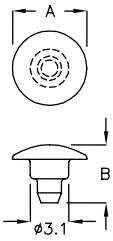

返回图片索引

塞头 HOLE PLUG 2-26-1

- MATERIAL: SILICONE
- COLOR: BLACK

PART NO	A	PACKAGE
MHG-5F	ø7.7	1000

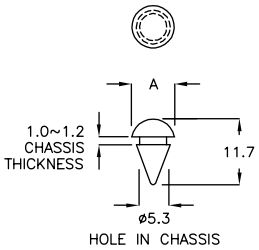

塞头 HOLE PLUG 2-26-2

- MATERIAL: TPE
- COLOR: BLACK

PART NO	A	PACKAGE
MAF-4D	ø12.0	1000

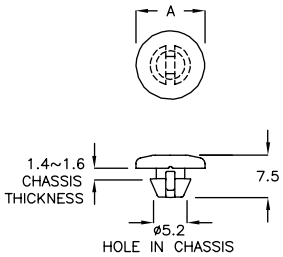

固定座 MOUNT 2-26-3

- MATERIAL: SILICONE
- COLOR: BLACK

PART NO	A	B	PACKAGE
MMQ-01	ø7.0	4.0	2000

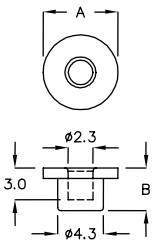

固定座 MOUNT 2-26-4

- MATERIAL: NYLON 66(UL)
- FLAME CLASS: 94V-0/94V-2
- COLOR: NATURAL

PART NO	A	B	PACKAGE
MMQ-02	ø3.0	2.0	2000

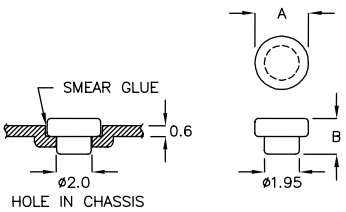

塞头 HOLE PLUG 2-26-5

- MATERIAL: TPE
- COLOR: BLACK

PART NO	A	B	PACKAGE
MXR-7BK	11.75	4.4	1000

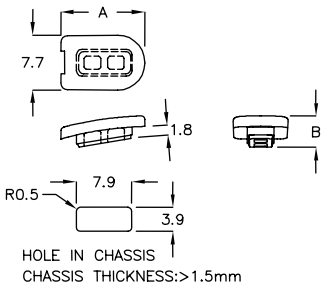

返回图片索引

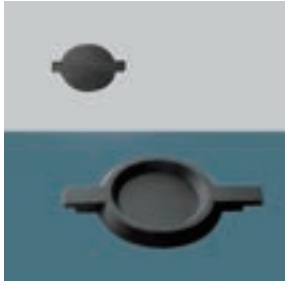

塞头 HOLE PLUG 2-27-1

- MATERIAL: TPE
- COLOR: BLACK

PART NO	A	B	PACKAGE
MXT-12GR	20.3	1.5	1000

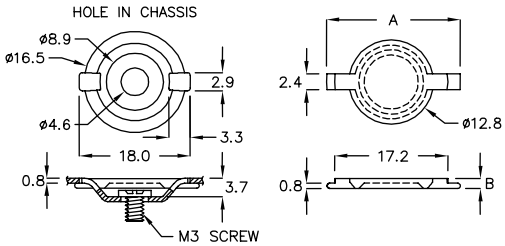

塞头 HOLE PLUG 2-27-2

- MATERIAL: NYLON 66(UL)
- FLAME CLASS: 94V-0/94V-2
- COLOR: BLACK

PART NO	A	B	PACKAGE
MBF-6A	ø7.0	5.4	2000

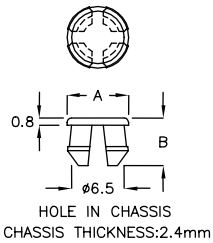

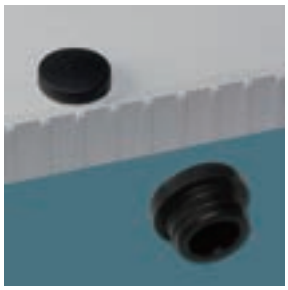

ANT3 RFID 塞头 ANT3 RFID HOLE PLUG 2-27-3

- MATERIAL: TPE
- COLOR: BLACK

PART NO	A	B	PACKAGE
MPL-9A	ø9.0	5.7	2000

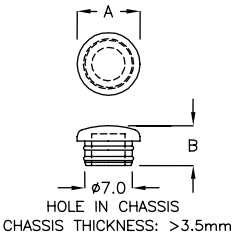

护线套 EDGING 2-27-4

- MATERIAL: NYLON 66(UL)
- FLAME CLASS: 94V-0/94V-2
- COLOR: NATURAL

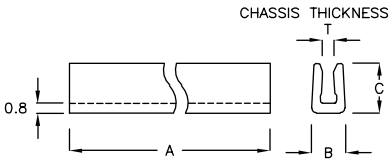

PART NO	A	B	C	T	PACKAGE
VTU-14	14.0	2.4	3.2	0.8	1000
VTU-20DM	20.0	2.8	5.5	1.0	

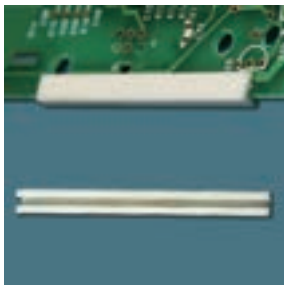

护线套 EDGING 2-27-5

- MATERIAL: NYLON 66(UL)
- FLAME CLASS: 94V-0/94V-2
- COLOR: NATURAL

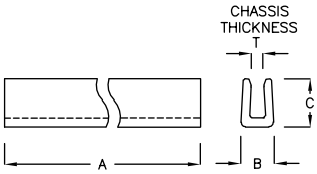

PART NO	A	B	C	T CHASSIS THICKNESS	PACKAGE
VTU-20A	20.0	4.8	5.0	2.5	1000
VTU-30C	30.0	4.4	5.0	1.6	
VTU-47	47.0	4.4	5.0	1.6	

返回图片索引

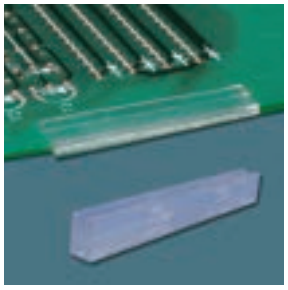

护线套 EDGING 2-28-1

- MATERIAL: PC(UL)
- FLAME CLASS: 94V-2
- COLOR: CLEAR

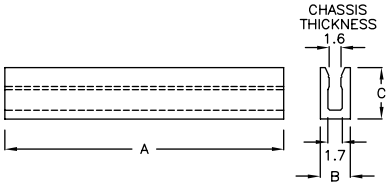

PART NO	A	B	C	PACKAGE
UTU-30	30.0	3.6	6.0	1000
UTU-60	60.0	3.6	6.0	500
UTU-60A	59.0	5.5	8.0	
UTU120	120.0	5.5	8.0	100

护线套 EDGING 2-28-2

- MATERIAL: NYLON 66(UL)
- FLAME CLASS: 94V-0/94V-2
- COLOR: BLACK
- ADHESIVE TAPE: 3M

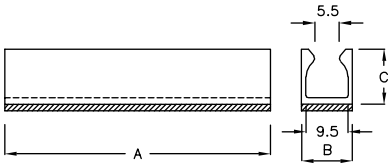

PART NO	A	B	C	PACKAGE
UTU-60C	60.0	11.5	12.5	100

返回图片索引

03

P.C.板间隔柱
SPACER SUPPORT

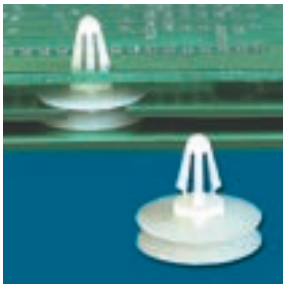

P.C. 板间隔柱 SPACER SUPPORT 3-2-1

- MATERIAL: NYLON 66(UL)
- FLAME CLASS: 94V-0/94V-2
- COLOR: NATURAL

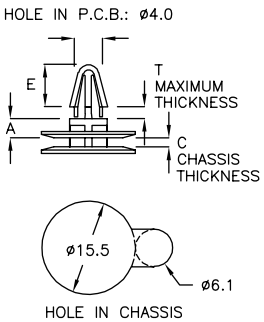

PART NO	A	T MAXIMUM THICKNESS	C CHASSIS THICKNESS	E	PACKAGE
LSA−2A	3.0	1.6	1.2	6.8	500

P.C. 板间隔柱 SPACER SUPPORT 3-2-2

- MATERIAL: NYLON 66(UL)
- FLAME CLASS: 94V-0/94V-2
- COLOR: NATURAL

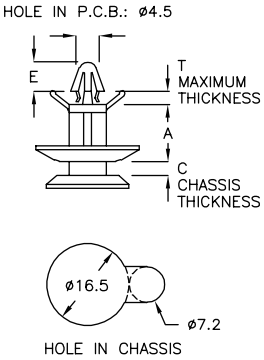

PART NO	A	T MAXIMUM THICKNESS	C CHASSIS THICKNESS	E	PACKAGE
LSD−9B	8.6	4.0	2.5	5.8	500
LSD−11A	11.1	2.0	2.5	5.8	
LSD−12	12.1	1.6	2.5	5.8	
LSD−12A	12.1	2.0	2.5	5.8	
LSD−14	14.0	1.6	2.5	5.8	

P.C. 板间隔柱 SPACER SUPPORT 3-2-3

- MATERIAL: NYLON 66(UL)
- FLAME CLASS: 94V-0/94V-2
- COLOR: NATURAL

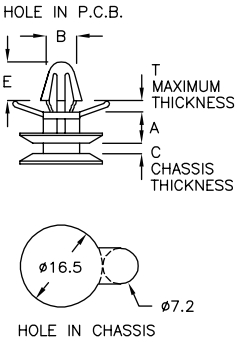

PART NO	A	B	T MAXIMUM THICKNESS	C CHASSIS THICKNESS	E	PACKAGE
LSD−4A	4.5	ø4.5	2.0	2.5	5.8	500
LSD−6	6.0	ø6.0	1.6	1.8	7.6	
LSD−9A	9.5	ø4.5	1.6	1.8	5.8	
LSD−9C	8.6	ø6.0	1.6	1.8	7.6	
LSD−13A	13.3	ø6.0	1.6	1.8	7.6	

P.C. 板间隔柱 SPACER SUPPORT 3-2-4

- MATERIAL: NYLON 66(UL)
- FLAME CLASS: 94V-0/94V-2
- COLOR: NATURAL

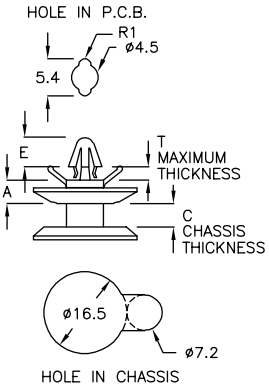

PART NO	A	T MAXIMUM THICKNESS	C CHASSIS THICKNESS	E	PACKAGE
LSD−8	3.3	2.0	2.5	6.5	500
LSD−8C	3.2	2.0	5.0	6.5	

返回图片索引

P.C. 板间隔柱 SPACER SUPPORT 3-3-1

- MATERIAL: NYLON 66(UL)
- FLAME CLASS: 94V-0/94V-2
- COLOR: NATURAL

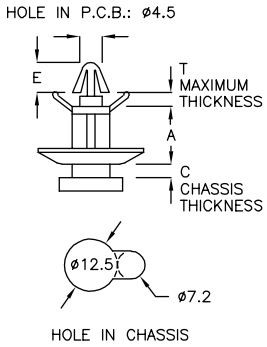

PART NO	A	T MAXIMUM THICKNESS	C CHASSIS THICKNESS	E	PACKAGE
LSD−11	11.0	2.0	2.2	5.8	500

P.C. 板间隔柱 SPACER SUPPORT 3-3-2

- MATERIAL: NYLON 66(UL)
- FLAME CLASS: 94V-0/94V-2
- COLOR: NATURAL

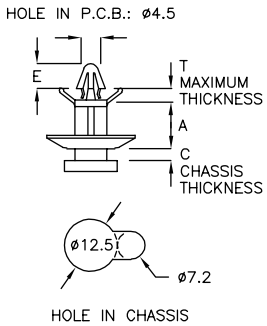

PART NO	A	T MAXIMUM THICKNESS	C CHASSIS THICKNESS	E	PACKAGE
LSD−11C	11.0	2.0	2.1	5.8	500

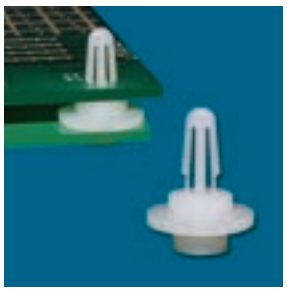

P.C. 板间隔柱 SPACER SUPPORT 3-3-3

- MATERIAL: NYLON 66(UL)
- FLAME CLASS: 94V-0/94V-2
- COLOR: NATURAL

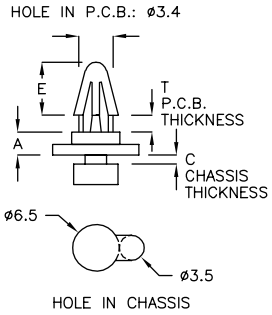

PART NO	A	T P.C.B. THICKNESS	C CHASSIS THICKNESS	E	PACKAGE
ACBS−3C	3.5	1.4~1.8	0.8~1.0	7.1	1000

P.C. 板间隔柱 SPACER SUPPORT 3-3-4

- MATERIAL: NYLON 66(UL)
- FLAME CLASS: 94V-0/94V-2
- COLOR: NATURAL

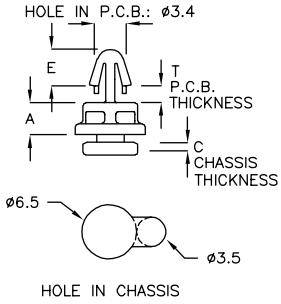

PART NO	A	T P.C.B. THICKNESS	C CHASSIS THICKNESS	E	PACKAGE
ACMS−3RK	3.5	1.6	0.6	4.0	1000

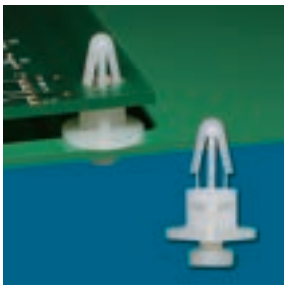

P.C. 板间隔柱 SPACER SUPPORT 3-4-1

- MATERIAL: NYLON 66(UL)
- FLAME CLASS: 94V-0/94V-2
- COLOR: NATURAL

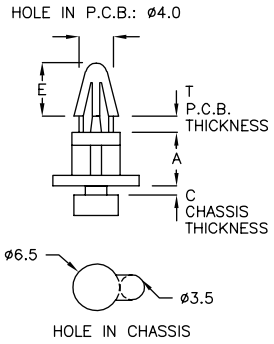

PART NO	A	T P.C.B. THICKNESS	C CHASSIS THICKNESS	E	PACKAGE
ACBS−2	2.5	1.4~1.7	0.8~1.4	7.1	1000
ACBS−3A	3.5	1.4~1.7	0.8~1.0	7.1	
ACBS−5	5.0	1.2~1.7	0.8~1.4	7.1	
ACBS−6	6.5	1.2~1.7	0.8~1.2	7.3	
ACBS−6B	6.35	1.4~1.9	0.8~1.4	7.1	
ACBS−6C	6.35	1.4~2.0	0.8~1.4	7.2	
ACBS−6M	6.85	1.2~1.6	0.5~0.8	7.0	
ACBS−8	8.0	1.4~1.8	0.8~1.4	7.1	
ACBS−10	10.0	1.4~1.8	0.8~1.5	7.1	
ACBS−12	12.7	1.4~1.8	1.0~1.6	7.1	

P.C. 板间隔柱 SPACER SUPPORT 3-4-2

- MATERIAL: NYLON 66(UL)
- FLAME CLASS: 94V-0/94V-2
- COLOR: NATURAL

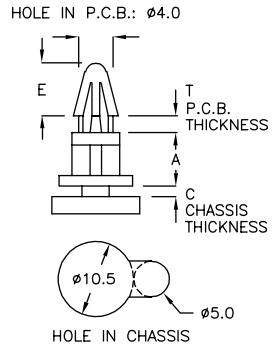

PART NO	A	T P.C.B. THICKNESS	C CHASSIS THICKNESS	E	PACKAGE
ACBS−8A	8.0	1.4~1.9	1.6~2.2	7.1	1000

P.C. 板间隔柱 SPACER SUPPORT 3-4-3

- MATERIAL: NYLON 66(UL)
- FLAME CLASS: 94V-0/94V-2
- COLOR: NATURAL

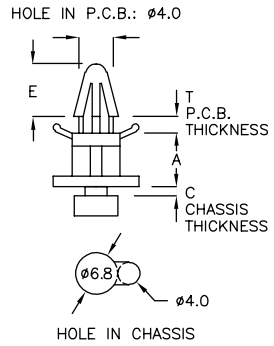

PART NO	A	T P.C.B. THICKNESS	C CHASSIS THICKNESS	E	PACKAGE
ACBS−6K	6.5	1.8~2.3	0.6~0.8	7.1	1000

P.C. 板间隔柱 SPACER SUPPORT 3-4-4

- MATERIAL: NYLON 66(UL)
- FLAME CLASS: 94V-0/94V-2
- COLOR: NATURAL

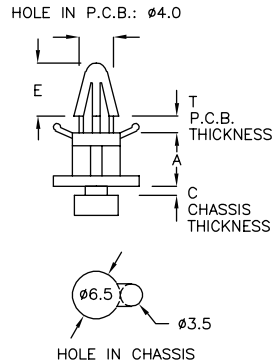

PART NO	A	T P.C.B. THICKNESS	C CHASSIS THICKNESS	E	PACKAGE
ACBS−6T	6.4	1.5~2.3	0.8~1.5	7.1	1000
ACBS−17T	17.0	1.4~1.8	0.6~0.8	7.1	500
ACBS−74T	74.0	1.4~1.6	1.0~1.2	7.3	200

返回图片索引

P.C. 板间隔柱 SPACER SUPPORT 3-5-1

- MATERIAL: NYLON 66(UL)
- FLAME CLASS: 94V-0/94V-2
- COLOR: NATURAL

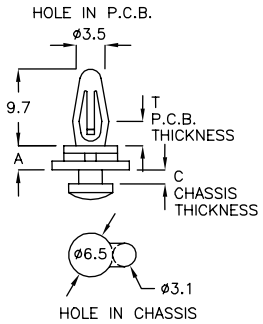

PART NO	A	T P.C.B. THICKNESS	C CHASSIS THICKNESS	PACKAGE
AF-003	3.2	1.6	1.0~1.7	1000

P.C. 板间隔柱 SPACER SUPPORT 3-5-2

- MATERIAL: NYLON 66(UL)
- FLAME CLASS: 94V-0/94V-2
- COLOR: NATURAL

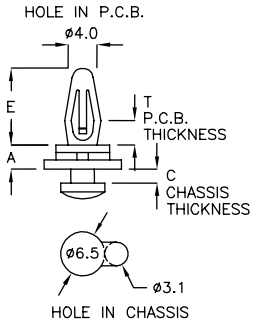

PART NO	A	T P.C.B. THICKNESS	C CHASSIS THICKNESS	E	PACKAGE
AC-003	3.2	1.6	1.0~1.7	10.3	1000
AC-006	6.4	1.6	1.0~1.7	10.2	

P.C. 板间隔柱 SPACER SUPPORT 3-5-3

- MATERIAL: NYLON 66(UL)
- FLAME CLASS: 94V-0/94V-2
- COLOR: NATURAL

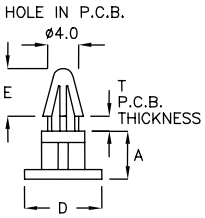

PART NO	A	T P.C.B. THICKNESS	D	E	PACKAGE
ACBS-6Y	6.4	1.2~1.6	ø11.8	7.2	1000
ACBS-8X	8.0	1.2~1.7	ø15.0	7.2	
ACBS-8Y	8.0	1.2~1.7	ø11.6	7.2	
ACBS-8K	8.0	1.2~1.7	ø18.0	7.1	
ACT-17	17.0	1.4~1.8	ø11.3	7.0	

P.C. 板间隔柱 SPACER SUPPORT 3-5-4

- MATERIAL: NYLON 66(UL)
- FLAME CLASS: 94V-0/94V-2
- COLOR: NATURAL

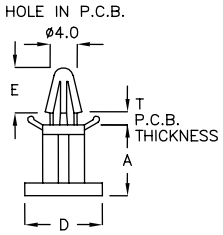

PART NO	A	T P.C.B. THICKNESS	D	E	PACKAGE
ACBS-8D	8.0	1.2~1.6	ø11.8	7.5	1000
ACBS-9K	8.5	1.6~2.2	ø12.0	6.0	
ACBS-9Y	9.0	1.2~1.6	ø12.0	7.1	
ACBS-10Y	10.0	1.2~1.6	ø12.0	7.1	
ACBS-11Y	11.0	1.2~1.6	ø11.9	7.1	

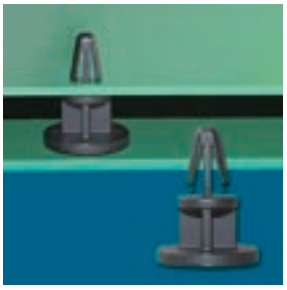

P.C. 板间隔柱 SPACER SUPPORT 3-5-5

- MATERIAL: NYLON 66(UL)
- FLAME CLASS: 94V-0/94V-2
- COLOR: BLACK

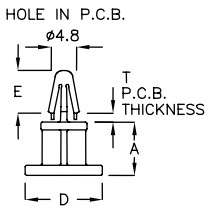

PART NO	A	T P.C.B. THICKNESS	D	E	PACKAGE
ACBK-9HG	9.6	1.6	ø15.0	8.3	1000

返回图片索引

P.C. 板间隔柱 SPACER SUPPORT 3-6-1

- MATERIAL: NYLON 66(UL)
- FLAME CLASS: 94V-0/94V-2
- COLOR: NATURAL

PART NO	A	T MAXIMUM THICKNESS	E	PACKAGE
LSD−13	13.3	2.0	5.8	500

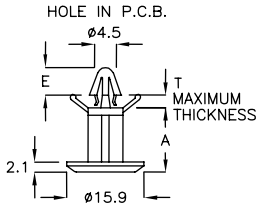

P.C. 板间隔柱 SPACER SUPPORT 3-6-2

- MATERIAL: NYLON 66(UL)
- FLAME CLASS: 94V-0/94V-2
- COLOR: NATURAL

PART NO	A	T MAXIMUM THICKNESS	E	PACKAGE
LSD−21	19.0	2.0	5.8	200

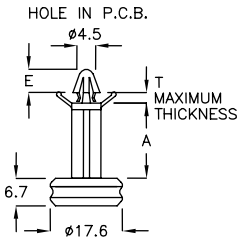

P.C. 板间隔柱 SPACER SUPPORT 3-6-3

- MATERIAL: NYLON 66(UL)
- FLAME CLASS: 94V-0/94V-2
- COLOR: NATURAL

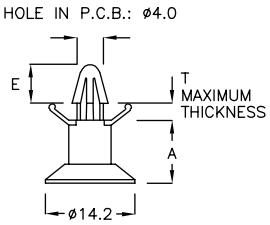

PART NO	A	T MAXIMUM THICKNESS	E	PACKAGE
LTD−10	9.9	2.0	5.4	500

P.C. 板间隔柱 SPACER SUPPORT 3-6-4

- MATERIAL: NYLON 66(UL)
- FLAME CLASS: 94V-0/94V-2
- COLOR: NATURAL

PART NO	A	T MAXIMUM THICKNESS	E	F	PACKAGE
LTD−11	11.0	2.0	5.8	2.0	500
LTD−14	14.0	2.0	5.8	2.0	

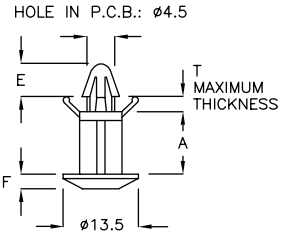

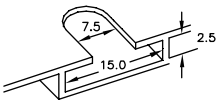

HOLE IN CHASSIS

P.C. 板间隔柱 SPACER SUPPORT 3-6-5

- MATERIAL: NYLON 66(UL)
- FLAME CLASS: 94V-0/94V-2
- COLOR: NATURAL

PART NO	A	T MAXIMUM THICKNESS	E	F	PACKAGE
LTD−18	18.0	1.8	5.8	3.5	500
LTD−18A	18.0	1.8	5.8	3.0	

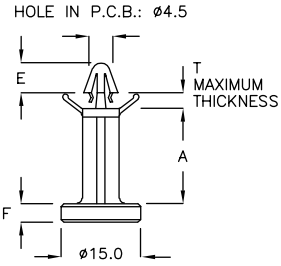

返回图片索引

P.C. 板间隔柱 SPACER SUPPORT 3-7-1

- MATERIAL: NYLON 66(UL)
- FLAME CLASS: 94V-0/94V-2
- COLOR: NATURAL

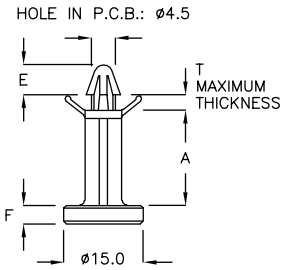

PART NO	A	T MAXIMUM THICKNESS	E	F	PACKAGE
LTD−18C	18.0	1.7	6.0	3.0	500

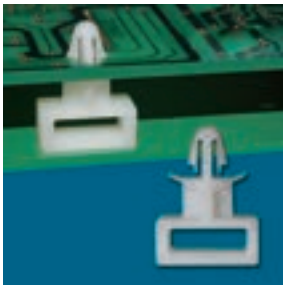

P.C. 板间隔柱 SPACER SUPPORT 3-7-2

- MATERIAL: NYLON 66(UL)
- FLAME CLASS: 94V-0/94V-2
- COLOR: NATURAL

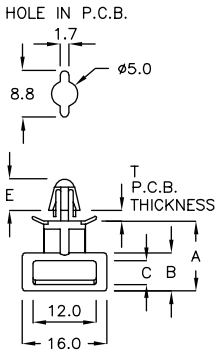

PART NO	A	B	C	T P.C.B. THICKNESS	E	PACKAGE
LTX−13	13.2	7.2	3.7	1.6	6.0	1000

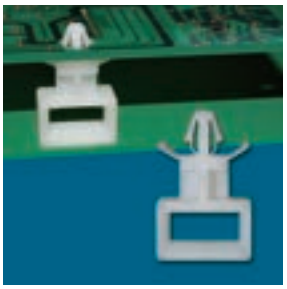

P.C. 板间隔柱 SPACER SUPPORT 3-7-3

- MATERIAL: NYLON 66(UL)
- FLAME CLASS: 94V-0/94V-2
- COLOR: NATURAL

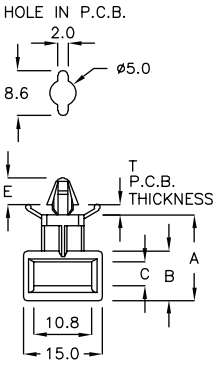

PART NO	A	B	C	T P.C.B. THICKNESS	E	PACKAGE
LTX−16A	16.2	9.4	4.5	1.6	5.0	500

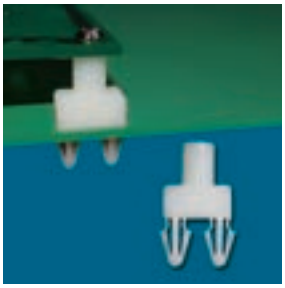

P.C. 板间隔柱 SPACER SUPPORT 3-7-4

- MATERIAL: NYLON 66(UL)
- FLAME CLASS: 94V-0/94V-2
- COLOR: NATURAL

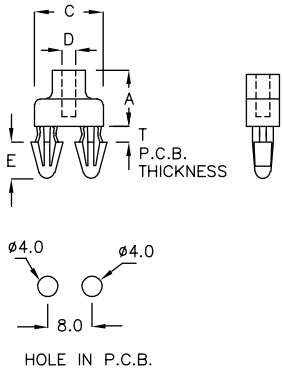

PART NO	A	T P.C.B. THICKNESS	C	D TAPPING SCREW	E	PACKAGE
TAA−01	13.8	2.0	12.5	M3X8	6.7	500
TAA−03	21.0	1.6	12.5	M3X8	6.7	
TAA−04	15.0	2.0	12.5	M3X8	6.7	
TAA−05	5.0	1.6	12.5	M3X4	6.7	
TAA−06	14.1	2.5	12.5	M3X8	6.7	

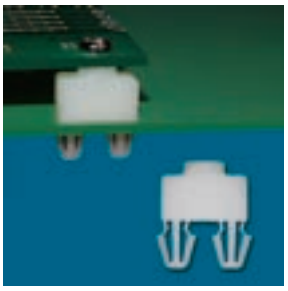

P.C. 板间隔柱 SPACER SUPPORT 3-8-1

- MATERIAL: NYLON 66(UL)
- FLAME CLASS: 94V-0/94V-2
- COLOR: NATURAL

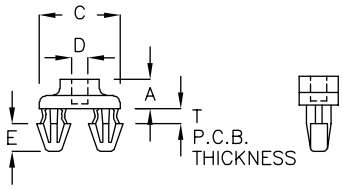

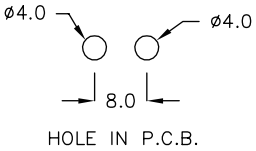

PART NO	A	T P.C.B. THICKNESS	C	D TAPPING SCREW	E	PACKAGE
TAA-07	4.5	2.0	12.5	M3X4	4.3	500
TAA-4A	8.5	1.6	12.5	M3X6	4.8	

P.C. 板间隔柱 SPACER SUPPORT 3-8-2

- MATERIAL: NYLON 66(UL)
- FLAME CLASS: 94V-0/94V-2
- COLOR: NATURAL

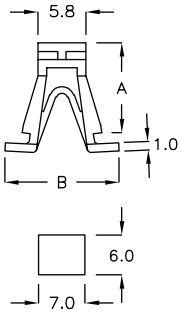

HOLE IN CHASSIS
CHASSIS THICKNESS:1.0mm

PART NO	A	B	PACKAGE
FK-011	11.0	13.0	1000

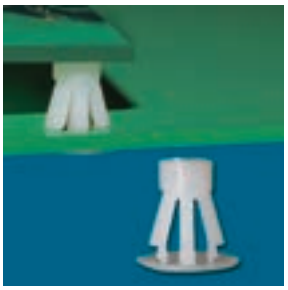

P.C. 板间隔柱 SPACER SUPPORT 3-8-3

- MATERIAL: NYLON 66(UL)
- FLAME CLASS: 94V-0/94V-2
- COLOR: NATURAL
- HOLE IN CHASSIS: Φ5.5

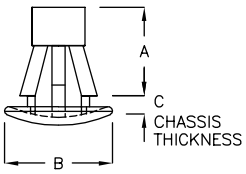

PART NO	A	B	C CHASSIS THICKNESS	PACKAGE
FCB-4M	4.5	ø9.8	0.8~1.2	1000
FCB-5	5.0	ø11.5	1.4~2.0	
FCB-6	6.35	ø10.4	1.0~2.0	
FCB-6A	6.35	ø10.0	1.5~2.3	
FCB-7	7.0	ø10.4	1.3~1.9	
FCB-8	8.0	ø9.8	1.0~1.4	
FCB-10	10.0	ø9.8	1.0~1.4	
FCB-10A	10.0	ø11.5	1.4~2.0	
FCB-12	12.7	ø9.8	1.0~1.4	
FCB-12A	12.7	ø9.9	1.2~2.2	
FCB-14	13.9	ø9.9	1.5~2.0	500
FCB-15	15.7	ø9.8	1.6~2.2	

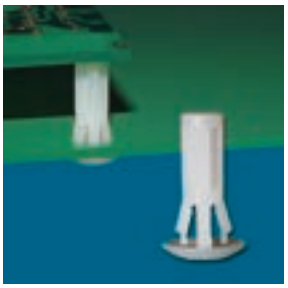

P.C. 板间隔柱 SPACER SUPPORT 3-8-4

- MATERIAL: NYLON 66(UL)
- FLAME CLASS: 94V-0/94V-2
- COLOR: NATURAL
- HOLE IN CHASSIS: Φ5.5

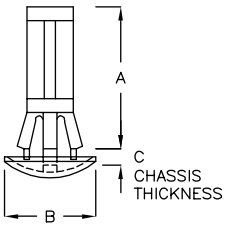

PART NO	A	B	C CHASSIS THICKNESS	PACKAGE
FCT-14	14.0	ø9.8	1.0~2.0	1000
FCT-19A	19.0	ø10.0	0.8~1.6	

返回图片索引

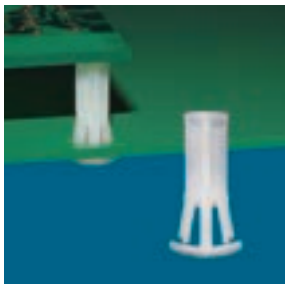

P.C. 板间隔柱 SPACER SUPPORT 3-9-1

- MATERIAL: NYLON 66(UL)
- FLAME CLASS: 94V-0/94V-2
- COLOR: NATURAL
- HOLE IN CHASSIS: Φ5.5

NEW

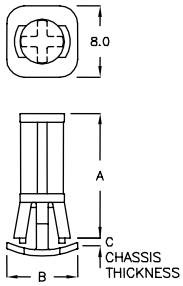

PART NO	A	B	C CHASSIS THICKNESS	PACKAGE
★ FCTA−14A	14.0	8.0	0.5~1.0	500

P.C. 板间隔柱 SPACER SUPPORT 3-9-2

- MATERIAL: NYLON 66(UL)
- FLAME CLASS: 94V-0/94V-2
- COLOR: NATURAL
- HOLE IN CHASSIS: Φ4.8

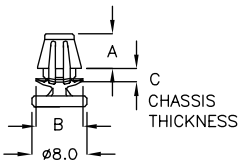

FORM.1

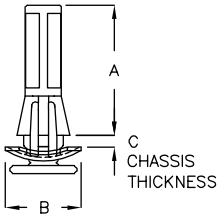

FORM.2

PART NO	A	B	C CHASSIS THICKNESS	FORM	PACKAGE
FFR−05	5.0	ø6.75	1.4~1.6	1	1000
FFR−15H	15.5	ø9.0	1.4~1.6	2	

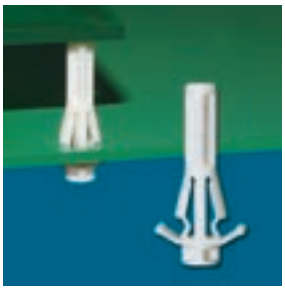

P.C. 板间隔柱 SPACER SUPPORT 3-9-3

- MATERIAL: NYLON 66(UL)
- FLAME CLASS: 94V-0/94V-2
- COLOR: NATURAL
- HOLE IN CHASSIS: Φ4.0

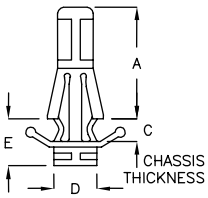

PART NO	A	C CHASSIS THICKNESS	D	E	PACKAGE
KDD−11	11.0	1.6	ø4.2	4.6	500
KDD−12C	12.5	1.6	ø4.2	4.1	
KDD−12MK	12.5	1.6	ø5.0	4.7	
KDD−12TS	12.5	1.6	ø5.0	5.5	
KDD−14C	14.6	1.6	ø4.2	5.1	
KDD−15A	15.0	1.6	ø5.0	4.6	
KDD−19	19.0	1.6	ø4.2	5.2	
KDD−22A	22.3	1.6	ø4.2	5.2	
KDD−24	24.0	1.6	ø5.0	4.6	

P.C. 板间隔柱 SPACER SUPPORT 3-9-4

- MATERIAL: NYLON 66(UL)
- FLAME CLASS: 94V-0/94V-2
- COLOR: NATURAL
- HOLE IN CHASSIS: Φ5.6

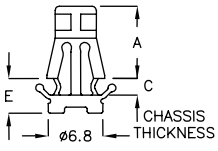

PART NO	A	C CHASSIS THICKNESS	E	PACKAGE
KDH−09	9.0	0.8~1.6	4.3	1000

返回图片索引

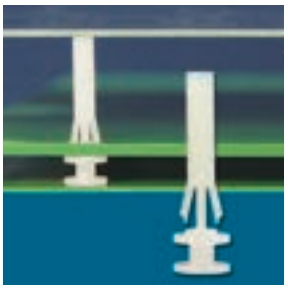

P.C. 板间隔柱 SPACER SUPPORT 3-10-1

- MATERIAL: NYLON 66(UL)
- FLAME CLASS: 94V-0/94V-2
- COLOR: NATURAL
- HOLE IN CHASSIS: Φ3.5

PART NO	A	C CHASSIS THICKNESS	D	E	PACKAGE
KDM−14K	15.0	1.4~1.6	ø6.0	5.8	500
KDM−16	16.0	1.4~1.6	ø6.0	5.8	2000
KDM−21C	21.6	1.4~1.6	ø7.5	12.8	500

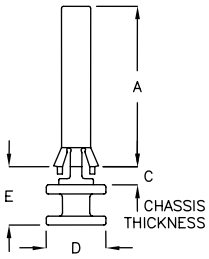

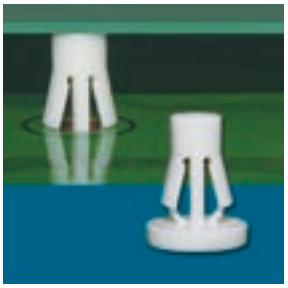

P.C. 板间隔柱 SPACER SUPPORT 3-10-2

- MATERIAL: NYLON 66(UL)
- FLAME CLASS: 94V-0/94V-2
- COLOR: NATURAL
- HOLE IN CHASSIS: Φ5.6

PART NO	A	B	C CHASSIS THICKESS	PACKAGE
SCQ−09	9.0	ø10.0	1.6	1000

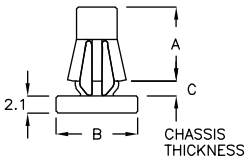

P.C. 板间隔柱 SPACER SUPPORT 3-10-3

- MATERIAL: NYLON 66(UL)
- FLAME CLASS: 94V-0/94V-2
- COLOR: NATURAL

PART NO	A	T P.C.B. THICKNESS	PACKAGE
SK−011	11.0	1.6	1000

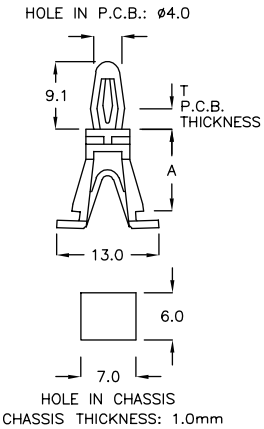

P.C. 板间隔柱 SPACER SUPPORT 3-10-4

- MATERIAL: NYLON 66(UL)
- FLAME CLASS: 94V-0/94V-2
- COLOR: NATURAL
- HOLE IN CHASSIS: Φ4.0

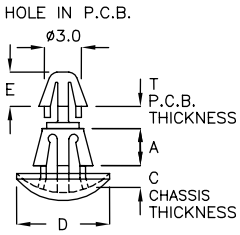

PART NO	A	T P.C.B. THICKNESS	C CHASSIS THICKNESS	D	E	PACKAGE
SCK−2C	2.5	1.4~1.6	0.8~1.0	ø5.8	2.7	2000
SCK−2K	2.5	1.6~1.9	0.8~1.0	ø5.8	2.65	
SCK−3A	3.2	1.4~1.6	0.8~1.6	ø8.0	3.0	1000
SCK−04	4.0	1.4~1.6	0.8~1.6	ø8.2	3.1	
SCK−4AM	4.5	1.4~1.6	0.8~1.6	ø8.2	3.1	
SCK−05	5.0	1.4~1.6	0.8~1.2	ø5.8	3.1	
SCK−5QN	5.5	1.4~1.6	1.4~1.6	ø8.2	3.1	
SCK−06	6.0	1.4~1.6	0.8~1.6	ø8.2	2.95	
SCK−07	7.0	1.4~1.6	1.4~1.6	ø8.2	3.1	
SCK−08	8.0	1.4~1.6	0.8~1.6	ø8.2	3.1	
SCK−10	10.0	1.4~1.6	0.8~1.6	ø8.2	3.1	
SCK−12	12.0	1.4~1.6	0.8~1.6	ø8.0	2.95	
SCK−16YT	16.0	1.4~1.6	1.4~1.6	ø8.0	2.9	

返回图片索引

P.C. 板间隔柱 SPACER SUPPORT 3-11-1

- MATERIAL: NYLON 66(UL)
- FLAME CLASS: 94V-0/94V-2
- COLOR: NATURAL
- HOLE IN CHASSIS: Φ5.5

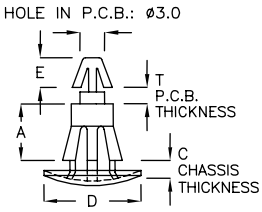

PART NO	A	T P.C.B. THICKNESS	C CHASSIS THICKNESS	D	E	PACKAGE
SCE−3A	3.5	1.2~1.7	1.1~1.7	ø11.45	3.6	1000
SCE−4KD	4.8	1.2~1.7	1.1~1.6	ø11.45	3.6	
SCE−6	6.35	1.2~1.7	1.1~1.6	ø11.45	3.6	
SCE−07	7.0	1.2~1.7	1.1~1.6	ø11.45	3.6	
SCE−8	8.0	1.2~1.7	1.1~1.6	ø11.45	3.6	
SCE−10	9.7	1.2~1.7	1.1~1.6	ø11.45	3.6	500
SCE−10A	10.5	1.2~1.7	1.1~1.6	ø11.45	3.6	
SCE−10C	9.7	1.2~1.7	1.1~1.6	ø7.0	3.6	
SCE−11	11.0	1.2~1.7	1.1~1.6	ø11.45	3.6	

P.C. 板间隔柱 SPACER SUPPORT 3-11-2

- MATERIAL: NYLON 66(UL)
- FLAME CLASS: 94V-0/94V-2
- COLOR: NATURAL
- HOLE IN CHASSIS: Φ4.0

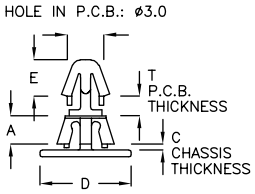

PART NO	A	T P.C.B. THICKNESS	C CHASSIS THICKNESS	D	E	PACKAGE
SCG−2A	2.5	1.6	0.5	ø8.0	3.2	2000
SCG−3D	3.8	1.6	0.8	ø8.0	3.2	
SCG−05	5.0	1.6	0.5	ø8.0	3.2	

P.C. 板间隔柱 SPACER SUPPORT 3-11-3

- MATERIAL: NYLON 66(UL)
- FLAME CLASS: 94V-0/94V-2
- COLOR: NATURAL

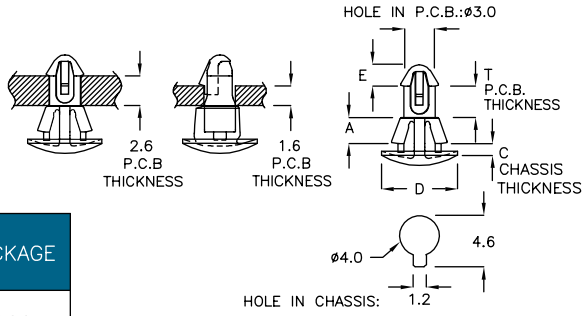

PART NO	A	T P.C.B. THICKNESS	C CHASSIS THICKNESS	D	E	PACKAGE
SCZ−2M	2.5	1.6	0.8~1.0	ø7.0	2.0	2000
		2.6				

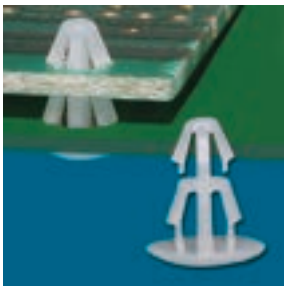

P.C. 板间隔柱 SPACER SUPPORT 3-11-4

- MATERIAL: NYLON 66(UL)
- FLAME CLASS: 94V-0/94V-2
- COLOR: NATURAL
- HOLE IN CHASSIS: Φ4.0

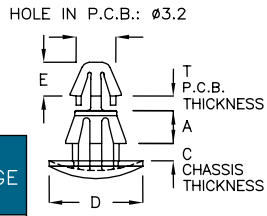

PART NO	A	T P.C.B. THICKNESS	C CHASSIS THICKNESS	D	E	PACKAGE
SCK−2DM	2.8	0.8~1.0	1.8	ø8.0	3.0	2000

返回图片索引

P.C. 板间隔柱 SPACER SUPPORT 3-12-1

- MATERIAL: NYLON 66(UL)
- FLAME CLASS: 94V-0/94V-2
- COLOR: NATURAL
- HOLE IN CHASSIS: Φ4.0

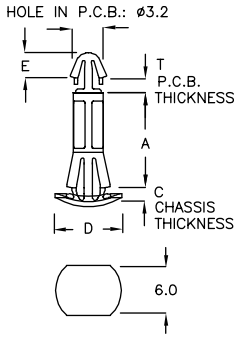

PART NO	A	T P.C.B. THICKNESS	C CHASSIS THICKNESS	D	E	PACKAGE
SCX-15	15.0	1.6	1.0	ø8.0	3.0	1000
SCX-35C	35.3	1.6	1.0	ø8.0	3.0	500

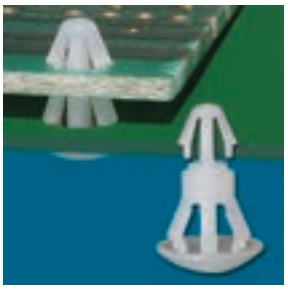

P.C. 板间隔柱 SPACER SUPPORT 3-12-2

- MATERIAL: NYLON 66(UL)
- FLAME CLASS: 94V-0/94V-2
- COLOR: NATURAL
- HOLE IN CHASSIS: Φ5.5

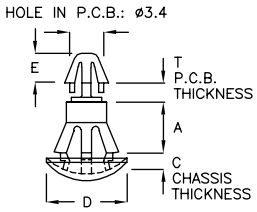

PART NO	A	T P.C.B. THICKNESS	C CHASSIS THICKNESS	D	E	PACKAGE
SCW-05	5.0	1.2~1.6	0.6~1.2	ø8.0	3.0	1000

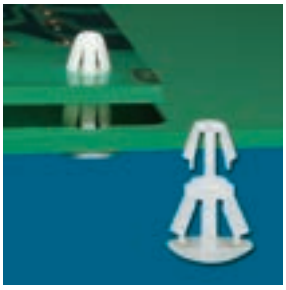

P.C. 板间隔柱 SPACER SUPPORT 3-12-3

- MATERIAL: NYLON 66(UL)
- FLAME CLASS: 94V-0/94V-2
- COLOR: NATURAL
- HOLE IN CHASSIS: Φ5.5

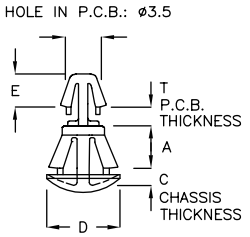

PART NO	A	T P.C.B. THICKNESS	C CHASSIS THICKNESS	D	E	PACKAGE
SCS-4KP	4.5	1.6~1.8	0.8~1.0	ø7.8	3.5	1000
SCU-11K	11.0	1.4~1.6	0.8~1.2	ø9.5	2.8	

P.C. 板间隔柱 SPACER SUPPORT 3-12-4

- MATERIAL: NYLON 66(UL)
- FLAME CLASS: 94V-0/94V-2
- COLOR: NATURAL
- HOLE IN CHASSIS: Φ5.5

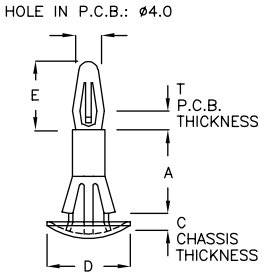

PART NO	A	T P.C.B. THICKNESS	C CHASSIS THICKNESS	D	E	PACKAGE
SCD-10S	10.0	0.8~1.9	1.0~1.6	ø11.5	9.65	500
SCD-12S	11.8	0.8~1.9	1.2~2.0	ø11.5	9.65	

返回图片索引

P.C. 板间隔柱 SPACER SUPPORT 3-13-1

- MATERIAL: NYLON 66(UL)
- FLAME CLASS: 94V-0/94V-2
- COLOR: NATURAL

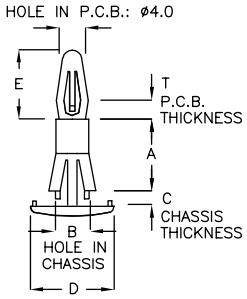

PART NO	A	B HOLE IN CHASSIS	T P.C.B. THICKNESS	C CHASSIS THICKNESS	D	E	PACKAGE
SCD−10	10.0	ø5.5	1.2~1.7	1.0~1.6	ø11.4	10.6	500
SCD−12	12.7	ø5.5	1.2~1.7	1.0~1.5	ø12.8	10.6	
SCD−15K	15.9	ø5.4	1.2~1.6	1.5~1.6	ø12.7	9.6	

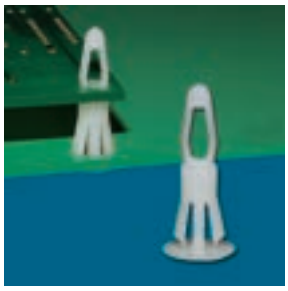

P.C. 板间隔柱 SPACER SUPPORT 3-13-2

- MATERIAL: NYLON 66(UL)
- FLAME CLASS: 94V-0/94V-2
- COLOR: NATURAL
- HOLE IN CHASSIS: Φ5.5

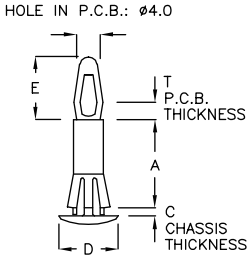

PART NO	A	T P.C.B. THICKNESS	C CHASSIS THICKNESS	D	E	PACKAGE
SCD−10A	10.0	1.2~1.6	1.0~1.1	ø10.0	10.8	500
SCD−25	25.0	1.2~1.6	1.0~1.1	ø10.0	10.6	

P.C. 板间隔柱 SPACER SUPPORT 3-13-3

- MATERIAL: NYLON 66(UL)
- FLAME CLASS: 94V-0/94V-2
- COLOR: BLACK
- HOLE IN CHASSIS: Φ5.5

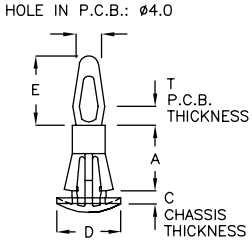

PART NO	A	T P.C.B. THICKNESS	C CHASSIS THICKNESS	D	E	PACKAGE
SCY−10	10.0	1.2~1.6	1.2~1.6	ø9.85	10.6	1000

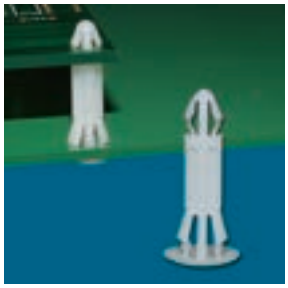

P.C. 板间隔柱 SPACER SUPPORT 3-13-4

- MATERIAL: NYLON 66(UL)
- FLAME CLASS: 94V-0/94V-2
- COLOR: NATURAL
- HOLE IN CHASSIS: Φ5.5

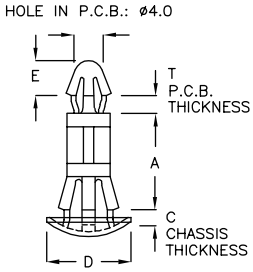

PART NO	A	T P.C.B. THICKNESS	C CHASSIS THICKNESS	D	E	PACKAGE
SCT−06	6.0	1.2~1.6	1.2~1.6	ø10.0	4.0	1000
SCT−7	7.0	1.2~1.6	1.3~2.0	ø11.2	4.0	
SCT−12A	12.0	1.2~1.6	1.1~2.0	ø9.9	4.0	
SCT−13A	13.5	1.2~1.6	0.8~1.6	ø9.9	4.0	
SCT−14	14.0	1.2~1.6	1.3~2.0	ø9.9	4.0	
SCT−21A	21.7	1.2~1.6	0.8~1.6	ø9.9	4.0	500

返回图片索引

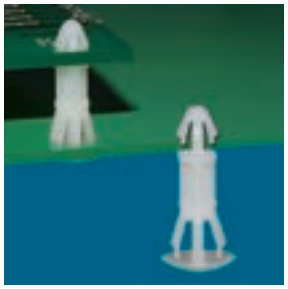

P.C. 板间隔柱 SPACER SUPPORT 3-14-1

- MATERIAL: NYLON 66(UL)
- FLAME CLASS: 94V-0/94V-2
- COLOR: NATURAL
- HOLE IN CHASSIS: Φ5.5

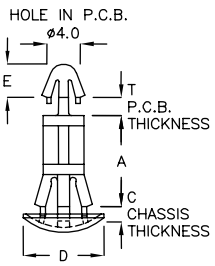

PART NO	A	D	E	C CHASSIS THICKNESS	T P.C.B. THICKNESS	PACKAGE
SCT−3	3.0	ø9.8	4.0	0.8~1.6	1.2~1.6	1000
SCT−3A	3.5	ø9.8	3.6	0.8~1.0	1.2~1.6	
SCT−10	10.0	ø9.8	4.5	1.4~2.0	1.2~1.6	

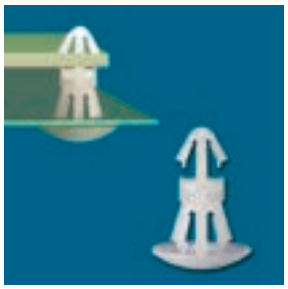

P.C. 板间隔柱 SPACER SUPPORT 3-14-2

- MATERIAL: NYLON 66(UL)
- FLAME CLASS: 94V-0/94V-2
- COLOR: NATURAL
- HOLE IN CHASSIS: Φ5.5

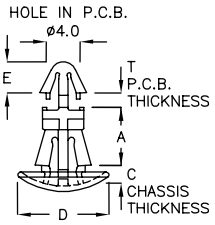

PART NO	A	D	E	C CHASSIS THICKNESS	T P.C.B. THICKNESS	PACKAGE
SCT−7AF	7.05	ø11.1	3.8	1.3~2.2	1.2~1.6	1000

P.C. 板间隔柱 SPACER SUPPORT 3-14-3

- MATERIAL: NYLON 66(UL)
- FLAME CLASS: 94V-0/94V-2
- COLOR: NATURAL
- HOLE IN CHASSIS: Φ5.5

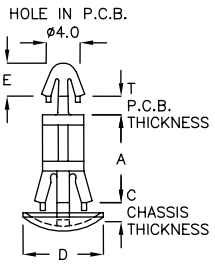

PART NO	A	D	E	C CHASSIS THICKNESS	T P.C.B. THICKNESS	PACKAGE
SCT−05	5.0	ø9.8	3.8	1.4~2.0	1.2~1.6	1000
SCT−6KT	6.35	ø9.8	3.8	1.4~2.0	1.2~1.6	
SCT−08	8.0	ø9.8	3.8	1.2~1.6	1.2~1.6	
SCT−8C	7.9	ø9.6	4.0	1.1~1.8	1.2~1.6	
SCT−12C	11.9	ø9.7	4.0	1.1~1.8	1.2~1.6	
SCT−18	18.0	ø9.8	4.0	1.0~2.0	1.2~1.6	
SCT−18K	18.0	ø9.8	4.0	1.8~2.2	1.2~1.6	

P.C. 板间隔柱 SPACER SUPPORT 3-14-4

- MATERIAL: NYLON 66(UL)
- FLAME CLASS: 94V-0/94V-2
- COLOR: NATURAL
- HOLE IN CHASSIS: Φ5.5

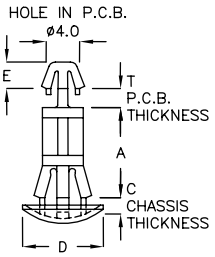

PART NO	A	D	E	C CHASSIS THICKNESS	T P.C.B. THICKNESS	PACKAGE
SCT−10A	10.0	ø10.0	3.2	0.8~1.6	1.2~1.6	1000
SCT−19	19.0	ø10.0	3.2	0.8~1.6	1.2~1.6	
SCT−19A	19.0	ø10.0	3.4	0.6	1.2~1.6	

返回图片索引

P.C. 板间隔柱 SPACER SUPPORT 3-15-1

- MATERIAL: NYLON 66(UL)
- FLAME CLASS: 94V-0/94V-2
- COLOR: NATURAL
- HOLE IN CHASSIS: Φ5.5

NEW

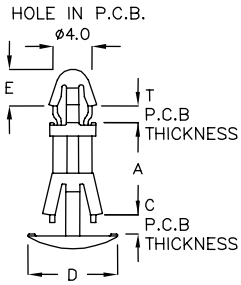

	PART NO	A	B	E	C P.C.B THICKNESS	T P.C.B THICKNESS	PACKAGE
★	SCTA−10	10.0	ø9.6	4.0	1.6	2.0	1000

P.C. 板间隔柱 SPACER SUPPORT 3-15-2

- MATERIAL: NYLON 66(UL)
- FLAME CLASS: 94V-0/94V-2
- COLOR: NATURAL
- HOLE IN CHASSIS: Φ5.5

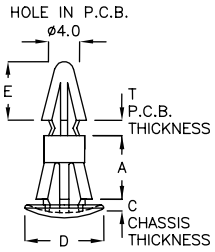

PART NO	A	D	E	C CHASSIS THICKNESS	T P.C.B. THICKNESS	PACKAGE
SCB−5	5.0	ø10.0	7.4	0.8~1.4	1.2~1.6	1000
SCB−5.5	5.5	ø10.0	7.1	0.8~1.7	1.2~1.6	
SCB−6	6.35	ø10.0	7.5	0.8~1.2	1.2~1.6	
SCB−6A	6.5	ø10.2	7.1	0.8~1.7	1.4~1.8	
SCB−6F	6.5	ø10.0	4.9	1.0~1.7	1.2~1.6	
SCB−8	8.0	ø9.9	7.1	0.8~1.4	1.2~1.6	
SCB−8A	8.0	ø10.1	7.4	0.8~1.1	1.2~1.6	
SCB−9A	9.0	ø9.9	7.3	0.8~1.4	1.2~1.8	
SCB−10	10.0	ø10.0	7.6	0.8~1.2	1.2~1.6	
SCB−10A	10.0	ø10.0	7.1	1.0~1.4	1.5~2.4	
SCB−11F	11.0	ø9.9	7.3	0.8~1.2	1.2~1.6	
SCB−12	12.4	ø9.9	7.2	0.8~1.4	1.2~1.6	
SCB−15	15.7	ø9.8	7.3	0.8~1.4	1.2~1.6	
SCB−16	16.2	ø9.8	6.6	0.7~1.2	1.2~1.6	500
SCB−19	19.0	ø9.9	7.5	0.8~1.4	1.2~1.6	
SCB−24	24.1	ø9.8	7.5	0.8~1.4	1.2~1.6	
SCB−28A	28.2	ø9.9	6.4	0.8~1.0	1.4~1.8	

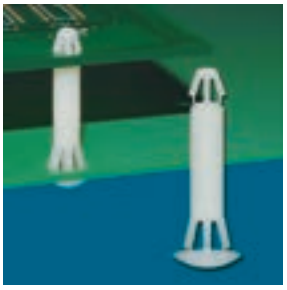

P.C. 板间隔柱 SPACER SUPPORT 3-15-3

- MATERIAL: NYLON 66(UL)
- FLAME CLASS: 94V-0/94V-2
- COLOR: NATURAL
- HOLE IN CHASSIS: Φ5.5

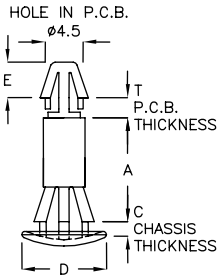

PART NO	A	D	E	C CHASSIS THICKNESS	T P.C.B. THICKNESS	PACKAGE
SCC−21	21.0	ø10.0	4.0	0.8~1.0	1.4~1.6	1000

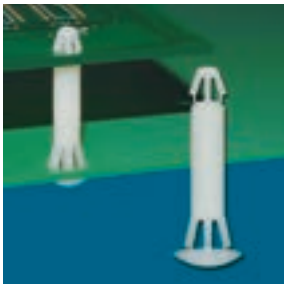

P.C. 板间隔柱 SPACER SUPPORT 3-16-1

- MATERIAL: NYLON 66(UL)
- FLAME CLASS: 94V-0/94V-2
- COLOR: NATURAL
- HOLE IN CHASSIS: Φ5.5

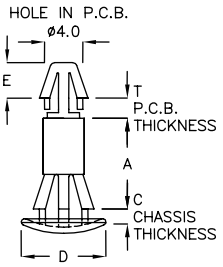

PART NO	A	D	E	C CHASSIS THICKNESS	T P.C.B. THICKNESS	PACKAGE
SCC-3	3.5	ø11.4	4.0	1.6~2.2	1.2~1.6	1000
SCC-3A	3.2	ø11.4	4.0	1.8~2.2	1.5~1.7	
SCC-3C	3.5	ø11.4	4.0	1.8~2.3	1.8~2.2	
SCC-5	5.0	ø11.4	4.0	1.6~2.2	1.2~1.6	
SCC-6	6.35	ø11.5	4.0	1.6~2.2	1.4~1.9	
SCC-8	8.2	ø11.4	4.0	1.6~2.2	1.3~1.7	
SCC-8D	7.9	ø11.5	4.0	1.6~2.2	1.3~1.7	
SCC-10	10.0	ø11.5	4.0	1.6~2.2	1.4~1.8	
SCC-10A	10.1	ø11.5	4.0	1.6~2.2	1.8~2.2	
SCC-10C	10.0	ø11.5	4.0	1.6~2.2	2.8~3.2	
SCC-12	12.8	ø11.4	4.0	1.6~2.2	1.2~1.6	
SCC-15	15.7	ø11.4	4.0	1.6~2.2	1.3~1.7	
SCC-19	19.1	ø11.4	4.0	1.6~1.8	1.3~1.7	
SCC-19A	19.1	ø11.4	4.0	1.6~2.2	1.6~2.0	
SCC-20	20.0	ø11.5	4.0	1.6~2.2	1.2~1.6	500
SCC-24	23.8	ø11.4	4.0	1.6~2.0	1.3~1.7	
SCC-26A	25.8	ø11.4	4.0	1.7~2.3	1.4~1.6	
SCC-32	32.0	ø11.4	4.0	1.7~2.3	1.4~1.6	

P.C. 板间隔柱 SPACER SUPPORT 3-16-2

- MATERIAL: NYLON 66(UL)
- FLAME CLASS: 94V-0/94V-2
- COLOR: NATURAL
- HOLE IN CHASSIS: Φ5.6

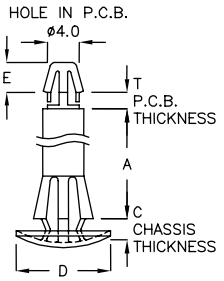

PART NO	A	D	E	C CHASSIS THICKNESS	T P.C.B. THICKNESS	PACKAGE
SCC-34	34.0	ø11.4	3.6	1.6~1.8	1.4~1.6	500

P.C. 板间隔柱 SPACER SUPPORT 3-16-3

- MATERIAL: NYLON 66(UL)
- FLAME CLASS: 94V-0/94V-2
- COLOR: NATURAL
- HOLE IN CHASSIS: Φ6.0

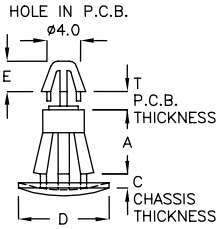

PART NO	A	D	E	C CHASSIS THICKNESS	T P.C.B. THICKNESS	PACKAGE
SCF-5	5.3	ø11.5	4.0	0.8~1.6	1.2~1.7	1000
SCF-06	6.35	ø11.6	4.1	0.8~1.6	1.2~1.7	
SCF-8	8.2	ø11.6	4.0	0.8~1.6	1.2~1.7	500
SCF-10	10.0	ø11.6	4.1	0.8~1.6	1.2~1.7	
SCF-12	12.7	ø11.6	4.0	0.8~1.6	1.2~1.7	
SCF-15AP	15.9	ø11.0	3.0	0.8~2.0	1.2~1.7	
SCF-21J	21.6	ø11.5	4.0	0.6~0.8	1.2~1.6	

返回图片索引

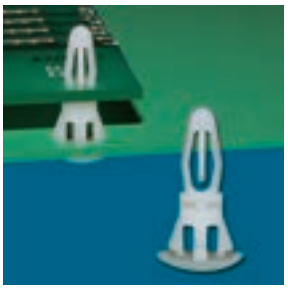

P.C. 板间隔柱 SPACER SUPPORT 3-17-1

- MATERIAL: NYLON 66(UL)
- FLAME CLASS: 94V-0/94V-2
- COLOR: NATURAL
- HOLE IN CHASSIS: Φ6.0

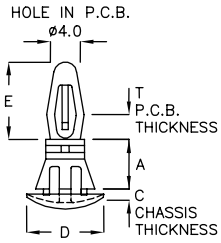

PART NO	A	D	E	C CHASSIS THICKNESS	T P.C.B. THICKNESS	PACKAGE
SCD−6A	6.4	ø10.0	10.0	0.8~1.2	1.2~1.7	1000

P.C. 板间隔柱 SPACER SUPPORT 3-17-2

- MATERIAL: NYLON 66(UL)
- FLAME CLASS: 94V-0/94V-2
- COLOR: NATURAL
- HOLE IN CHASSIS: Φ6.0

NEW

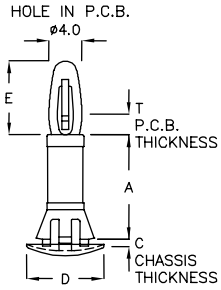

	PART NO	A	D	E	C P.C.B THICKNESS	T P.C.B. THICKNESS	PACKAGE
★	SCD−14K	14.0	ø10.0	10.0	0.8~1.2	1.2~1.7	500

P.C. 板间隔柱 SPACER SUPPORT 3-17-3

- MATERIAL: NYLON 66(UL)
- FLAME CLASS: 94V-0/94V-2
- COLOR: NATURAL
- HOLE IN CHASSIS: Φ5.5

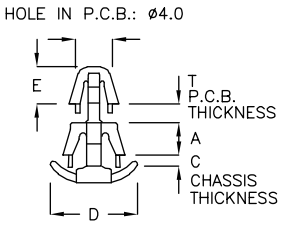

PART NO	A	T P.C.B. THICKNESS	C CHASSIS THICKNESS	D	E	PACKAGE
SCP−3A	3.5	1.4~1.6	0.5~0.8	ø9.5	4.0	2000

P.C. 板间隔柱 SPACER SUPPORT 3-17-4

- MATERIAL: NYLON 66(UL)
- FLAME CLASS: 94V-0/94V-2
- COLOR: NATURAL
- HOLE IN CHASSIS: Φ5.5

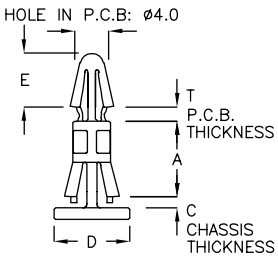

PART NO	A	T P.C.B. THICKNESS	C CHASSIS THICKNESS	D	E	PACKAGE
SDA−10	10.0	1.2~1.6	0.8~1.2	ø10.0	7.1	1000

返回图片索引

P.C. 板间隔柱 SPACER SUPPORT 3-18-1

- MATERIAL: NYLON 66(UL)
- FLAME CLASS: 94V-0/94V-2
- COLOR: NATURAL
- HOLE IN CHASSIS: Φ5.5

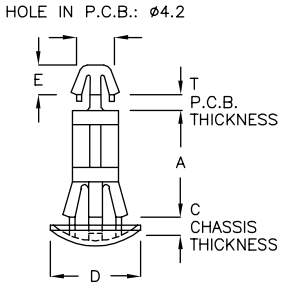

PART NO	A	T P.C.B. THICKNESS	C CHASSIS THICKNESS	D	E	PACKAGE
SCM−19	19.0	1.0	0.6~0.8	ø10.0	3.3	500
SCM−25	25.0	1.6	0.6~0.8	ø10.0	2.7	

P.C. 板间隔柱 SPACER SUPPORT 3-18-2

- MATERIAL: NYLON 66(UL)
- FLAME CLASS: 94V-0/94V-2
- COLOR: NATURAL
- HOLE IN CHASSIS: Φ5.5

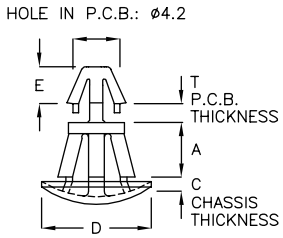

PART NO	A	T P.C.B. THICKNESS	C CHASSIS THICKNESS	D	E	PACKAGE
SCM−05	5.0	1.6	0.6	ø10.0	3.3	1000

P.C. 板间隔柱 SPACER SUPPORT 3-18-3

- MATERIAL: NYLON 66(UL)
- FLAME CLASS: 94V-0/94V-2
- COLOR: NATURAL
- HOLE IN CHASSIS: Φ5.5

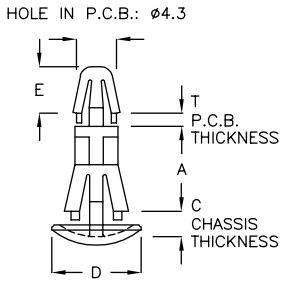

PART NO	A	T P.C.B. THICKNESS	C CHASSIS THICKNESS	D	E	PACKAGE
SCL−9	9.0	1.1	1.5~1.8	ø9.5	5.1	500

P.C. 板间隔柱 SPACER SUPPORT 3-18-4

- MATERIAL: NYLON 66(UL)
- FLAME CLASS: 94V-0/94V-2
- COLOR: NATURAL
- HOLE IN CHASSIS: Φ5.5

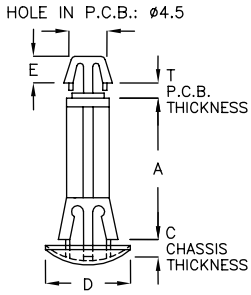

PART NO	A	T P.C.B. THICKNESS	C CHASSIS THICKNESS	D	E	PACKAGE
SCA−19	19.0	1.6	0.8	ø10.0	3.1	1000

返回图片索引

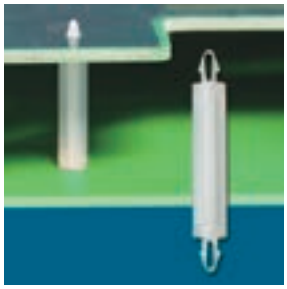

P.C. 板间隔柱 SPACER SUPPORT 3-19-1

- MATERIAL: NYLON 66(UL)
- FLAME CLASS: 94V-0/94V-2
- COLOR: NATURAL

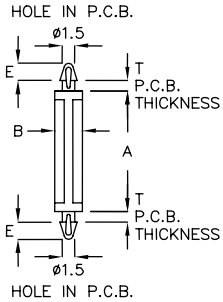

PART NO	A	B	E	T P.C.B. THICKNESS	PACKAGE
MCL−14	14.0	ø3.2	2.0	1.0	2000

P.C. 板间隔柱 SPACER SUPPORT 3-19-2

- MATERIAL: NYLON 66(UL)
- FLAME CLASS: 94V-0/94V-2
- COLOR: NATURAL

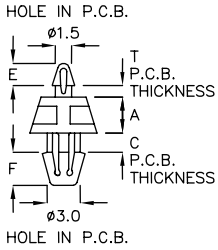

PART NO	A	E	F	C P.C.B. THICKNESS	T P.C.B. THICKNESS	PACKAGE
KHA−3A	3.2	2.0	2.95	1.6	0.8	2000

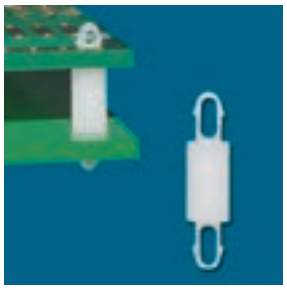

P.C. 板间隔柱 SPACER SUPPORT 3-19-3

- MATERIAL: NYLON 66(UL)
- FLAME CLASS: 94V-0/94V-2
- COLOR: NATURAL

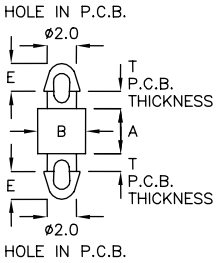

PART NO	A	B	E	T P.C.B. THICKNESS	PACKAGE
MCS−2A	2.2	ø3.2	1.85	1.0	2000
MCS−2F	2.2	ø3.2	1.85	1.6	
MCS−03	3.0	ø3.2	1.95	1.0	
MCS−3DF	3.5	ø3.2	1.85	1.0	
MCS−04	4.0	ø3.2	1.85	1.0	
MCS−4GW	4.1	ø3.2	1.9	0.9	
MCS−4A	4.5	ø3.2	1.85	1.0	
MCS−4C	4.0	ø3.2	1.85	1.6	
MCS−4F	4.5	ø3.2	1.85	1.6	
MCS−05	5.0	ø3.2	1.85	1.0	
MCS−5A	5.5	ø3.2	1.85	1.0	

PART NO	A	B	E	T P.C.B. THICKNESS	PACKAGE
MCS−5C	5.0	ø3.2	1.85	1.6	2000
MCS−5F	5.5	ø3.2	1.85	1.6	
MCS−06	6.0	ø3.2	1.85	1.0	
MCS−6A	6.5	ø3.2	1.85	1.0	
MCS−6C	6.0	ø3.2	1.85	1.6	
MCS−6F	6.5	ø3.2	1.85	1.6	
MCS−08	8.0	ø3.2	1.85	1.0	
MCS−8C	8.0	ø3.2	1.85	1.6	
MCS−10A	10.5	ø3.2	2.1	1.6	
MCS−18	18.2	ø3.0	1.5	1.0	
MCS−22	22.0	ø3.2	2.0	1.6	

P.C. 板间隔柱 SPACER SUPPORT 3-19-4

- MATERIAL: NYLON 66(UL)
- FLAME CLASS: 94V-0/94V-2
- COLOR: NATURAL

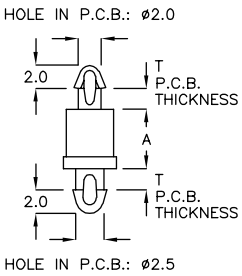

PART NO	A	T P.C.B. THICKNESS	PACKAGE
MEA−2M	2.5	1.6	2000
MEA−4M	4.5	1.6	
MEA−05	5.0	1.6	
MEA−5M	5.5	1.6	
MEA−6M	6.5	1.6	

返回图片索引

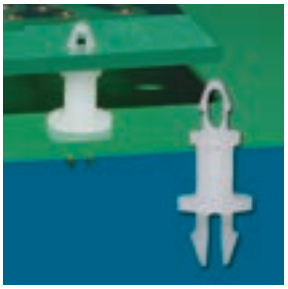

P.C. 板间隔柱 SPACER SUPPORT 3-20-1

- MATERIAL: NYLON 66(UL)
- FLAME CLASS: 94V-0/94V-2
- COLOR: NATURAL

PART NO	A	T P.C.B. THICKNESS	PACKAGE
MCJ-6	6.0	1.6	2000

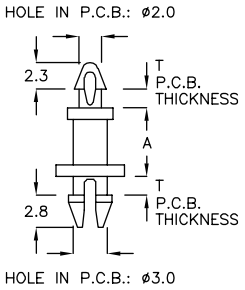

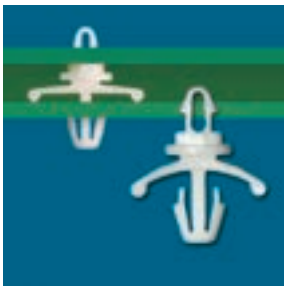

P.C. 板间隔柱 SPACER SUPPORT 3-20-2

- MATERIAL: NYLON 66(UL)
- FLAME CLASS: 94V-0/94V-2
- COLOR: NATURAL

PART NO	A	T P.C.B THICKNESS	C P.C.B THICKNESS	PACKAGE
LBK-04	3.0	0.8~1.0	0.8~1.6	2000

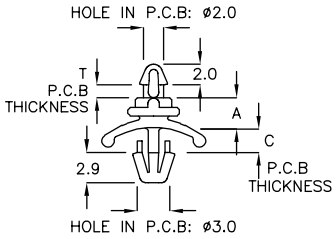

P.C. 板间隔柱 SPACER SUPPORT 3-20-3

- MATERIAL: NYLON 66(UL)
- FLAME CLASS: 94V-0/94V-2
- COLOR: NATURAL

PART NO	A	B	T P.C.B. THICKNESS	E	PACKAGE
MCK-3A	3.5	ø4.4	1.7	2.2	2000

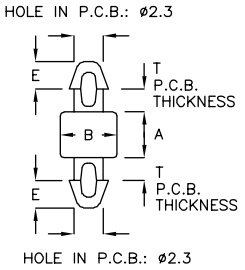

P.C. 板间隔柱 SPACER SUPPORT 3-20-4

- MATERIAL: NYLON 66(UL)
- FLAME CLASS: 94V-0/94V-2
- COLOR: NATURAL

PART NO	A	T P.C.B. THICKNESS	E	F	PACKAGE
MCA-4	3.8	0.8~1.6	5.8	1.5	2000
MCA-06	6.0	0.8~1.6	5.8	1.4	

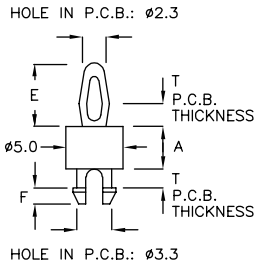

P.C. 板间隔柱 SPACER SUPPORT 3-20-5

- MATERIAL: NYLON 66(UL)
- FLAME CLASS: 94V-0/94V-2
- COLOR: NATURAL

PART NO	A	T P.C.B. THICKNESS	C P.C.B. THICKNESS	PACKAGE
MEG-03	3.0	0.9	1.6	2000
MEG-06	6.0	1.6	2.3	

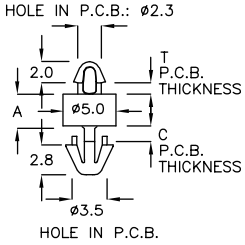

返回图片索引

P.C. 板间隔柱 SPACER SUPPORT 3-21-1

- MATERIAL: NYLON 66(UL)
- FLAME CLASS: 94V-0/94V-2
- COLOR: NATURAL

NEW

PART NO	A	C CHASSIS THICKNESS	T CHASSIS THICKNESS	PACKAGE
★ MEG−04A	4.0	0.8	0.5	2000

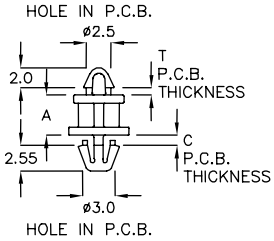

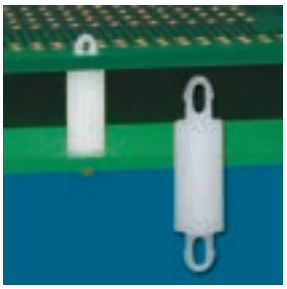

P.C. 板间隔柱 SPACER SUPPORT 3-21-2

- MATERIAL: NYLON 66(UL)
- FLAME CLASS: 94V-0/94V-2
- COLOR: NATURAL

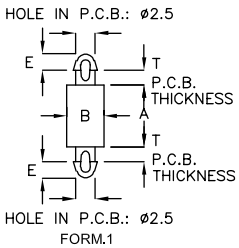

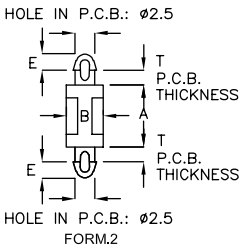

PART NO	A	B	E	T	FORM	PACKAGE
MCD2−2	2.0	ø4.5	2.2	1.2~1.6	1	2000
MCD2−2M	2.5	ø4.5	2.0	1.2~1.6	1	
MCD2−3	3.0	ø4.5	2.2	1.2~1.6	1	
MCD2−3A	3.2	ø4.3	2.2	1.2~1.6	1	
MCD2−3M	3.5	ø4.5	2.0	1.2~1.6	1	
MCD2−4	4.0	ø4.5	2.2	1.2~1.6	1	
MCD2−4M	4.5	ø4.5	2.1	1.2~1.6	1	
MCD2−5	5.0	ø4.5	2.2	1.2~1.6	1	
MCD2−5M	5.5	ø4.5	2.0	1.2~1.6	1	

PART NO	A	B	E	T	FORM	PACKAGE
MCD2−6	6.0	ø4.6	2.2	1.2~1.6	1	2000
MCD2−6M	6.5	ø4.5	2.0	1.2~1.6	1	
MCD2−7	7.0	ø4.5	2.4	1.2~1.6	1	
MCD2−7A	7.5	ø4.5	2.2	1.6~1.8	2	
MCD2−8	8.0	ø4.5	2.2	1.2~1.6	1	
MCD2−9M	9.5	ø4.5	2.0	1.2~1.6	1	1000
MCD2−10	10.0	ø4.5	2.2	1.2~1.6	1	
MCD2−12	12.0	ø4.5	2.2	1.2~1.6	1	
MCD2−20	20.0	ø4.5	2.0	1.2~1.6	2	

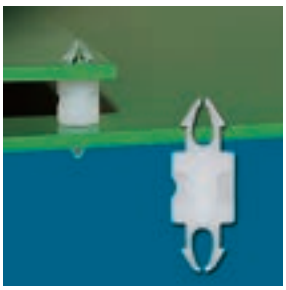

P.C. 板间隔柱 SPACER SUPPORT 3-21-3

- MATERIAL: NYLON 66(UL)
- FLAME CLASS: 94V-0/94V-2
- COLOR: NATURAL

PART NO	A	B	E	T P.C.B. THICKNESS	PACKAGE
UCX−5K	5.0	ø4.5	2.0	1.2~1.6	2000

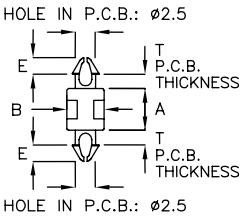

P.C. 板间隔柱 SPACER SUPPORT 3-21-4

- MATERIAL: NYLON 66(UL)
- FLAME CLASS: 94V-0/94V-2
- COLOR: NATURAL

PART NO	A	T P.C.B. THICKNESS	PACKAGE
MQD−2DK	2.8	1.4~1.6	2000

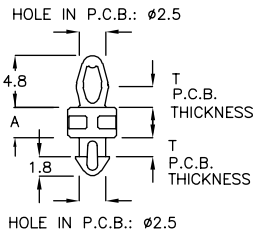

返回图片索引

P.C. 板间隔柱 SPACER SUPPORT 3-22-1

- MATERIAL: NYLON 66(UL)
- FLAME CLASS: 94V-0/94V-2
- COLOR: NATURAL

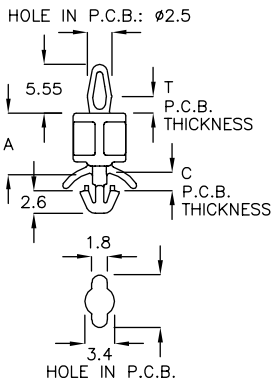

PART NO	A	T P.C.B. THICKNESS	C P.C.B. THICKNESS	PACKAGE
LCY-7MR	7.0	1.6	1.0~1.6	1000

P.C. 板间隔柱 SPACER SUPPORT 3-22-2

- MATERIAL: NYLON 66(UL)
- FLAME CLASS: 94V-0/94V-2
- COLOR: NATURAL

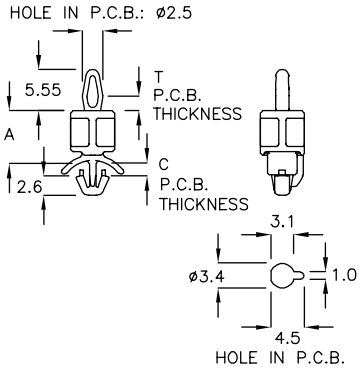

PART NO	A	T P.C.B. THICKNESS	C P.C.B. THICKNESS	PACKAGE
LCY-7SA	7.0	1.6	1.0~1.6	1000

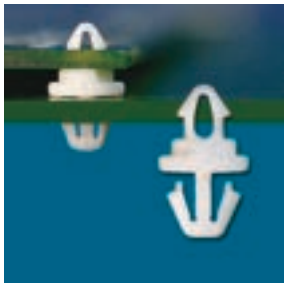

P.C. 板间隔柱 SPACER SUPPORT 3-22-3

- MATERIAL: NYLON 66(UL)
- FLAME CLASS: 94V-0/94V-2
- COLOR: NATURAL

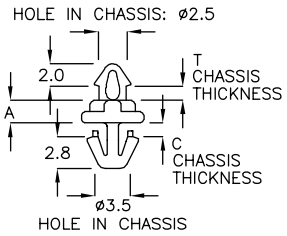

PART NO	A	T CHASSIS THICKNESS	C CHASSIS THICKNESS	PACKAGE
MEH-02	2.0	1.0	1.0	2000

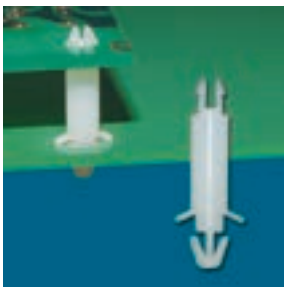

P.C. 板间隔柱 SPACER SUPPORT 3-22-4

- MATERIAL: NYLON 66(UL)
- FLAME CLASS: 94V-0/94V-2
- COLOR: NATURAL

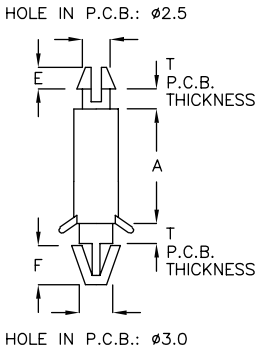

PART NO	A	T P.C.B. THICKNESS	E	F	PACKAGE
LCA2-5	5.0	1.0~1.7	1.7	3.3	2000
LCA2-8	7.7	1.0~1.7	1.7	3.3	
LCA2-9	9.0	1.0~1.7	1.7	3.3	
LCA2-10	9.9	1.0~1.7	1.7	3.3	
LCA2-12	11.6	1.0~1.7	1.7	3.3	
LCA2-14	13.6	1.0~1.7	1.6	3.3	
LCA2-16	15.7	1.0~1.7	1.7	3.3	

返回图片索引

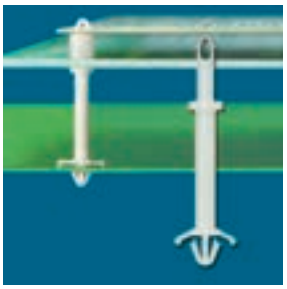

P.C. 板间隔柱 SPACER SUPPORT 3-23-1

- MATERIAL: NYLON 66(UL)
- FLAME CLASS: 94V-0/94V-2
- COLOR: NATURAL

PART NO	A	T P.C.B. THICKNESS	C CHASSIS THICKNESS	PACKAGE
LCJ-19	19.0	7.4	0.3~0.6	500

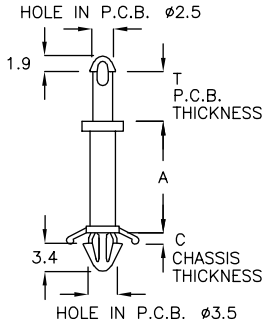

P.C. 板间隔柱 SPACER SUPPORT 3-23-2

- MATERIAL: NYLON 66(UL)
- FLAME CLASS: 94V-0/94V-2
- COLOR: NATURAL

PART NO	A	T P.C.B. THICKNESS	C P.C.B. THICKNESS	PACKAGE
LCR-11A	11.6	1.6	2.0	1000

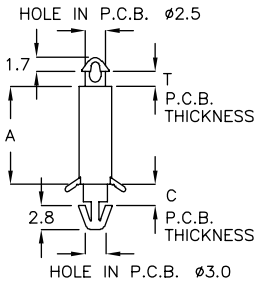

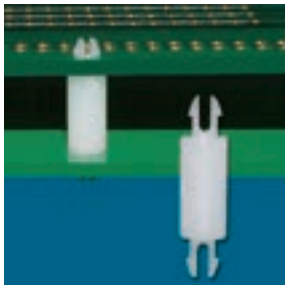

P.C. 板间隔柱 SPACER SUPPORT 3-23-3

- MATERIAL: NYLON 66(UL)
- FLAME CLASS: 94V-0/94V-2
- COLOR: NATURAL

PART NO	A	B	T P.C.B. THICKNESS	E	PACKAGE
UCF-03	3.0	ø3.0	0.8	1.5	2000
UCF-9H	9.5	ø4.5	1.6	1.8	1000

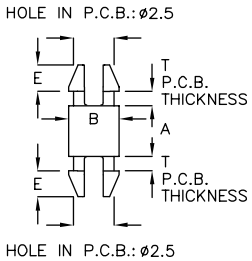

P.C. 板间隔柱 SPACER SUPPORT 3-23-4

- MATERIAL: NYLON 66(UL)
- FLAME CLASS: 94V-0/94V-2
- COLOR: NATURAL

PART NO	A	T P.C.B. THICKNESS	C P.C.B. THICKNESS	E	PACKAGE
UCC-05	5.0	0.8	1.0	1.6	2000

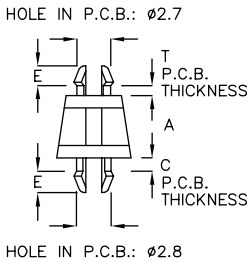

P.C. 板间隔柱 SPACER SUPPORT 3-23-5

- MATERIAL: NYLON 66(UL)
- FLAME CLASS: 94V-0/94V-2
- COLOR: NATURAL

PART NO	A	T P.C.B. THICKNESS	E	F	PACKAGE
MCM-2A	1.4	1.4~1.6	5.4	2.4	2000
MCM-02	2.0	1.4~1.6	5.3	2.4	

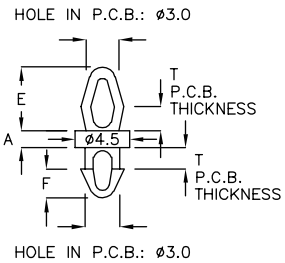

返回图片索引

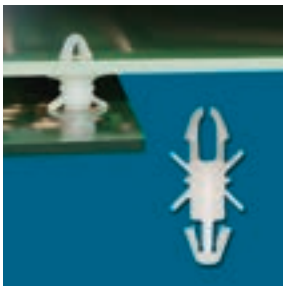

P.C. 板间隔柱 SPACER SUPPORT 3-24-1

- MATERIAL: NYLON 66(UL)
- FLAME CLASS: 94V-0/94V-2
- COLOR: NATURAL

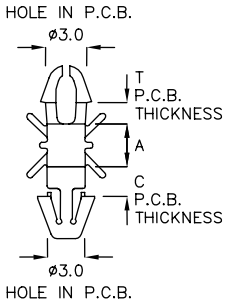

PART NO	A	C P.C.B. THICKNESS	T P.C.B. THICKNESS	PACKAGE
LCX−3A	3.25	1.4~1.6	0.8~1.0	2000

P.C. 板间隔柱 SPACER SUPPORT 3-24-2

- MATERIAL: NYLON 66(UL)
- FLAME CLASS: 94V-0/94V-2
- COLOR: NATURAL

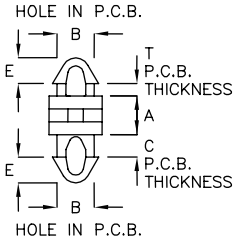

PART NO	A	E	B HOLE IN P.C.B.	C P.C.B. THICKNESS	T P.C.B. THICKNESS	PACKAGE
MCL−03	3.0	2.1	ø3.0	1.6	0.8	2000
MCL−18	18.0	2.2	ø1.5	1.0	1.0	

P.C. 板间隔柱 SPACER SUPPORT 3-24-3

- MATERIAL: NYLON 66(UL)
- FLAME CLASS: 94V-0/94V-2
- COLOR: NATURAL

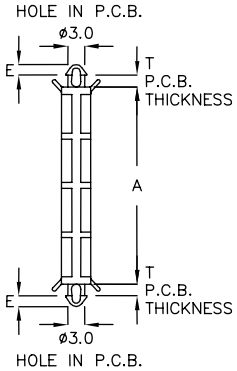

PART NO	A	E	T P.C.B. THICKNESS	PACKAGE
DMK−49J	49.6	1.8	1.6	500

P.C. 板间隔柱 SPACER SUPPORT 3-24-4

- MATERIAL: NYLON 66(UL)
- FLAME CLASS: 94V-0/94V-2
- COLOR: NATURAL

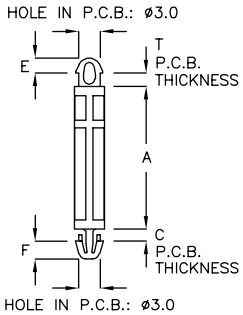

PART NO	A	T P.C.B. THICKNESS	C P.C.B. THICKNESS	E	F	PACKAGE
MCY−25	25.0	1.4 ~ 1.6	1.0~ 1.2	2.0	2.4	500
MCY−26A	26.8	1.4 ~ 1.6	1.0~ 1.2	2.0	2.4	

返回图片索引

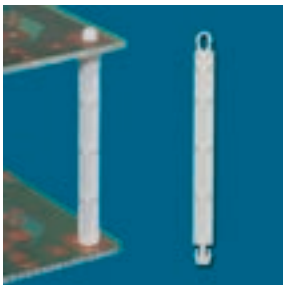

P.C. 板间隔柱 SPACER SUPPORT 3-25-1

- MATERIAL: NYLON 66(UL)
- FLAME CLASS: 94V-0/94V-2
- COLOR: NATURAL

PART NO	A	T P.C.B. THICKNESS	C P.C.B. THICKNESS	E	F	PACKAGE
MCY-36P	36.5	1.6	1.2	2.0	2.4	500

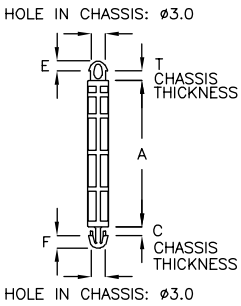

P.C. 板间隔柱 SPACER SUPPORT 3-25-2

- MATERIAL: NYLON 66(UL)
- FLAME CLASS: 94V-0/94V-2
- COLOR: NATURAL

PART NO	A	T P.C.B. THICKNESS	C P.C.B. THICKNESS	E	PACKAGE
MCH-28A	28.2	1.0 ~ 1.2	1.4 ~ 1.6	1.9	500

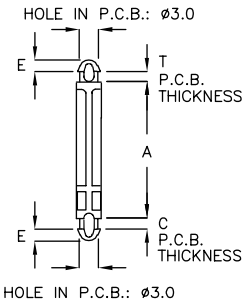

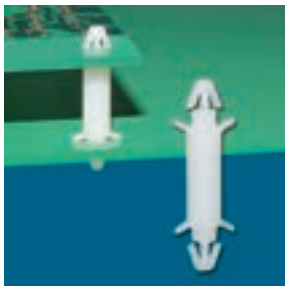

P.C. 板间隔柱 SPACER SUPPORT 3-25-3

- MATERIAL: NYLON 66(UL)
- FLAME CLASS: 94V-0/94V-2
- COLOR: NATURAL

PART NO	A	T P.C.B. THICKNESS	E	PACKAGE
LCA3-3A	3.1	1.0~1.7	3.2	2000
LCA3-3	3.2	1.0~1.7	3.2	
LCA3-7	6.8	1.6~1.9	3.2	
LCA3-11	11.5	1.0~1.6	3.2	1000
LCA3-15	15.2	1.0~1.6	3.2	
LCA3-20	19.8	1.0~1.8	3.2	
LCA3-25	25.0	1.6~1.7	3.2	500

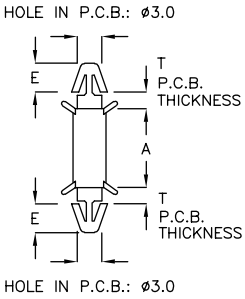

P.C. 板间隔柱 SPACER SUPPORT 3-25-4

- MATERIAL: NYLON 66(UL)
- FLAME CLASS: 94V-0/94V-2
- COLOR: NATURAL

PART NO	A	T P.C.B. THICKNESS	E	F	PACKAGE
MCB3-6	6.35	1.2~1.7	9.1	3.3	2000
MCB3-12	12.7	1.2~1.7	9.1	3.3	1000

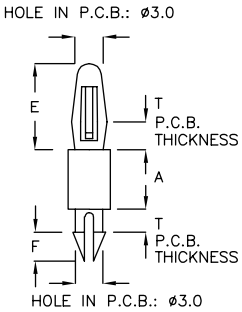

P.C. 板间隔柱 SPACER SUPPORT 3-25-5

- MATERIAL: NYLON 66(UL)
- FLAME CLASS: 94V-0/94V-2
- COLOR: NATURAL

NEW

	PART NO	A	E	T P.C.B. THICKNESS	PACKAGE
★	MCFA-2A	2.5	2.6	0.7~0.9	2000

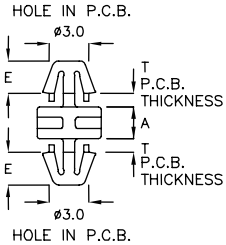

返回图片索引

P.C. 板间隔柱 SPACER SUPPORT 3-26-1

- MATERIAL: NYLON 66(UL)
- FLAME CLASS: 94V-0/94V-2
- COLOR: NATURAL

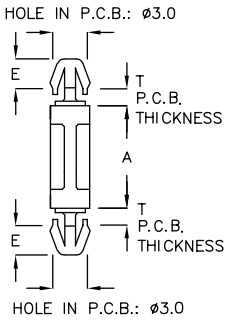

PART NO	A	T P.C.B. THICKNESS	E	PACKAGE
MCF−2A	2.5	1.2~1.8	3.6	2000
MCF−03	3.0	1.2~1.8	3.7	
MCF−3M	3.5	1.2~1.8	3.6	
MCF−04	4.0	1.2~1.8	3.7	
MCF−4M	4.5	1.2~1.8	3.6	
MCF−05	5.0	1.2~1.8	3.7	
MCF−5M	5.5	1.2~1.8	3.6	
MCF−6	6.35	1.2~1.8	3.7	
MCF−07	7.0	1.2~1.8	3.7	
MCF−8	8.0	1.2~1.8	3.7	
MCF−09	9.0	1.2~2.0	3.6	
MCF−10	9.7	1.2~1.8	3.7	
MCF−12	12.7	1.2~1.8	3.7	1000
MCF−57	57.0	1.4~1.6	3.5	500

P.C. 板间隔柱 SPACER SUPPORT 3-26-2

- MATERIAL: NYLON 66(UL)
- FLAME CLASS: 94V-0/94V-2
- COLOR: NATURAL

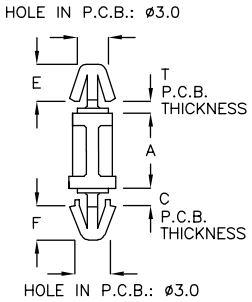

PART NO	A	T P.C.B. THICKNESS	C P.C.B. THICKNESS	E	F	PACKAGE
MCF−6A	6.0	0.8~1.0	1.2~1.7	3.6	3.6	2000
MCF−3RK	3.1	1.0~1.35	1.5~1.7	3.5	2.5	

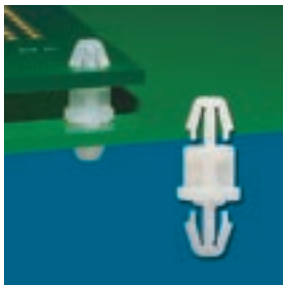

P.C. 板间隔柱 SPACER SUPPORT 3-26-3

- MATERIAL: NYLON 66(UL)
- FLAME CLASS: 94V-0/94V-2
- COLOR: NATURAL

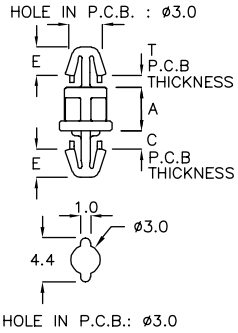

PART NO	A	T P.C.B THICKNESS	C P.C.B THICKNESS	E	PACKAGE
MQY−4MA	4.3	0.8～1.0	1.4 ～ 1.6	2.8	2000

返回图片索引

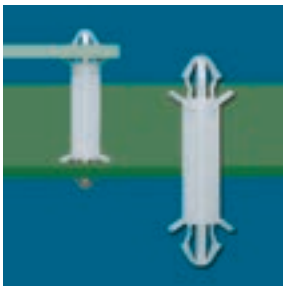

P.C. 板间隔柱 SPACER SUPPORT 3-27-1

- MATERIAL: NYLON 66(UL)
- FLAME CLASS: 94V-0/94V-2
- COLOR: NATURAL

PART NO	A	T P.C.B. THICKNESS	E	PACKAGE
LTA3−10M	10.5	1.2~1.6	2.5	1000
LTA3−12	12.0	1.2~1.6	2.5	
LTA3−13	13.0	1.2~1.6	2.5	
LTA3−18M	18.3	1.2~1.6	2.5	
LTA3−36A	36.8	0.8~1.8	2.5	500
LTA3−40	40.0	1.2~1.6	2.5	

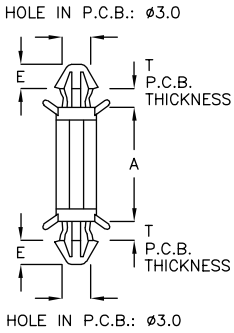

P.C. 板间隔柱 SPACER SUPPORT 3-27-2

- MATERIAL: NYLON 66(UL)
- FLAME CLASS: 94V-0/94V-2
- COLOR: NATURAL

PART NO	A	T P.C.B. THICKNESS	C P.C.B. THICKNESS	E	PACKAGE
LTA3−40A	40.8	1.2~1.6	1.4~1.6	2.4	1000
LTA3−41A	41.5	1.2~1.6	1.4~1.8	2.4	

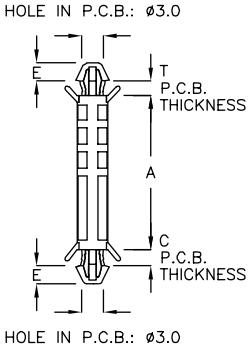

P.C. 板间隔柱 SPACER SUPPORT 3-27-3

- MATERIAL: NYLON 66(UL)
- FLAME CLASS: 94V-0/94V-2
- COLOR: NATURAL

PART NO	A	T P.C.B. THICKNESS	C P.C.B. THICKNESS	E	F	PACKAGE
LBD−7A	7.65	0.8～1.0	1.4 ～ 1.6	4.0	2.7	1000

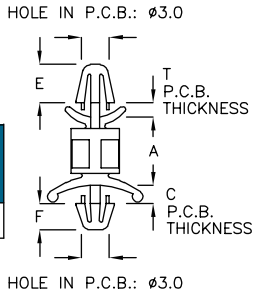

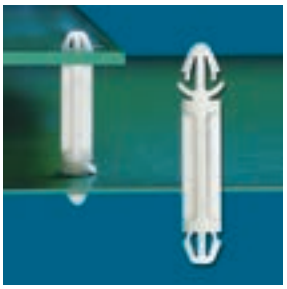

P.C. 板间隔柱 SPACER SUPPORT 3-27-4

- MATERIAL: NYLON 66(UL)
- FLAME CLASS: 94V-0/94V-2
- COLOR: NATURAL

PART NO	A	T P.C.B. THICKNESS	C P.C.B. THICKNESS	E	F	PACKAGE
MQF−14DC	14.4	1.2~1.6	0.6	3.05	2.35	1000

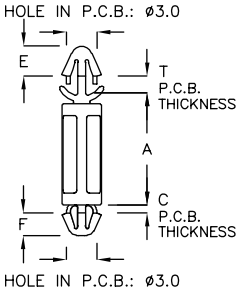

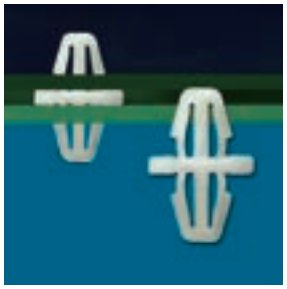

P.C. 板间隔柱 SPACER SUPPORT 3-28-1

- MATERIAL: NYLON 66(UL)
- FLAME CLASS: 94V-0/94V-2
- COLOR: NATURAL

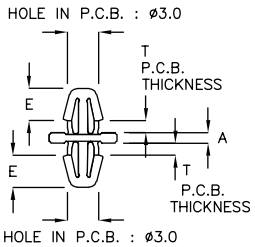

PART NO	A	T CHASSIS THICKNESS	E	PACKAGE
MCQ−1AT	1.0	1.0	3.1	2000

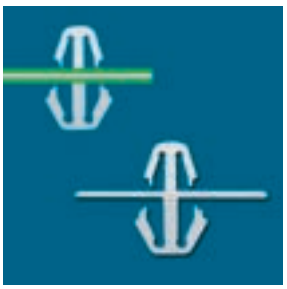

P.C. 板间隔柱 SPACER SUPPORT 3-28-2

- MATERIAL: NYLON 66(UL)
- FLAME CLASS: 94V-0/94V-2
- COLOR: NATURAL

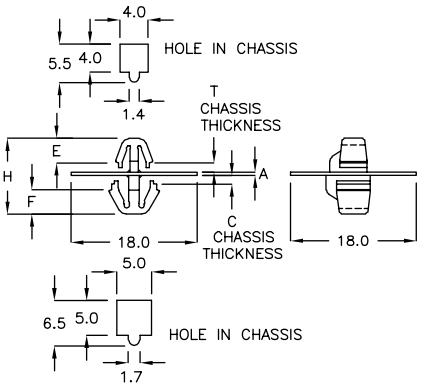

PART NO	A	T CHASSIS THICKNESS	C CHASSIS THICKNESS	E	F	H	PACKAGE
MCI−1GS	0.5	1.0	1.0~1.5	3.5	3.5	10.8	1000
MCI−1JR	0.5	0.5	1.0~1.5	3.5	3.5	10.1	

P.C. 板间隔柱 SPACER SUPPORT 3-28-3

- MATERIAL: NYLON 66(UL)
- FLAME CLASS: 94V-0/94V-2
- COLOR: NATURAL

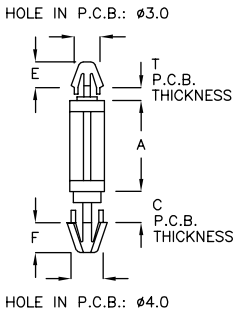

PART NO	A	T P.C.B. THICKNESS	C P.C.B. THICKNESS	E	F	PACKAGE
MCN−31	31.0	1.2~1.6	3.6~4.0	3.5	4.1	1000

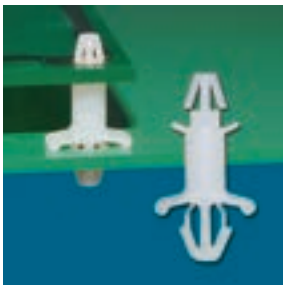

P.C. 板间隔柱 SPACER SUPPORT 3-28-4

- MATERIAL: NYLON 66(UL)
- FLAME CLASS: 94V-0/94V-2
- COLOR: NATURAL

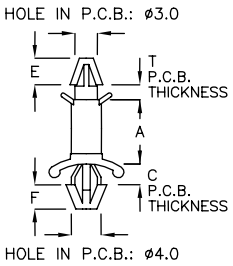

PART NO	A	T P.C.B. THICKNESS	C P.C.B. THICKness	E	F	PACKAGE
LCB3−8	7.4	0.8~1.7	0.8~2.0	3.5	3.5	1000
LCB3−10	10.0	0.8~1.7	0.8~2.0	3.5	3.5	
LCB3−13	13.0	1.2~1.6	0.8~1.8	3.5	3.3	

返回图片索引

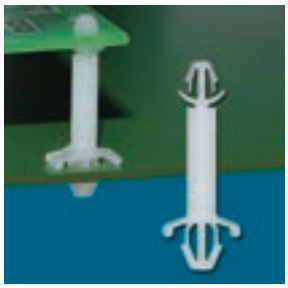

P.C. 板间隔柱 SPACER SUPPORT 3-29-1

- MATERIAL: NYLON 66(UL)
- FLAME CLASS: 94V-0/94V-2
- COLOR: NATURAL

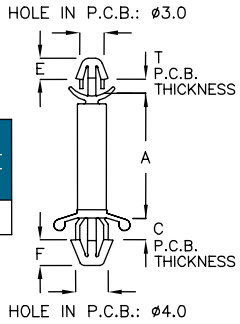

PART NO	A	T P.C.B. THICKNESS	C P.C.B. THICKNESS	E	F	PACKAGE
LCBA-15L	16.4	0.8~1.8	1.2~2.0	2.8	3.4	1000

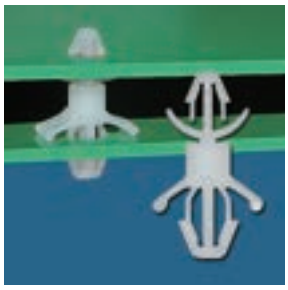

P.C. 板间隔柱 SPACER SUPPORT 3-29-2

- MATERIAL: NYLON 66(UL)
- FLAME CLASS: 94V-0/94V-2
- COLOR: NATURAL

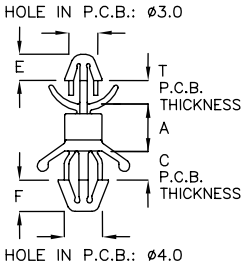

PART NO	A	T P.C.B. THICKNESS	C P.C.B. THICKNESS	E	F	PACKAGE
LBCM-5GA	5.0	0.8~2.0	1.2~2.6	2.8	3.4	1000

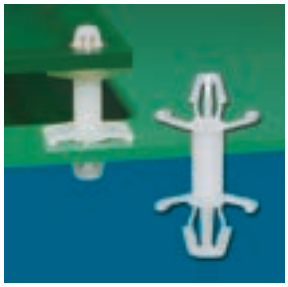

P.C. 板间隔柱 SPACER SUPPORT 3-29-3

- MATERIAL: NYLON 66(UL)
- FLAME CLASS: 94V-0/94V-2
- COLOR: NATURAL

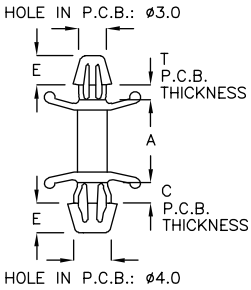

PART NO	A	T P.C.B. THICKNESS	C P.C.B. THICKNESS	E	PACKAGE
LCH-6A	6.6	0.6~1.0	1.6~1.8	3.1	1000
LCH-8A	8.6	0.6~1.0	1.6~1.8	3.1	

P.C. 板间隔柱 SPACER SUPPORT 3-29-4

- MATERIAL: NYLON 66(UL)
- FLAME CLASS: 94V-0/94V-2
- COLOR: NATURAL

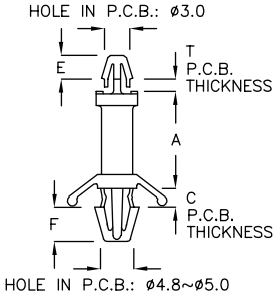

PART NO	A	T P.C.B. THICKNESS	C P.C.B. THICKNESS	E	F	PACKAGE
MQC-14	13.9	1.4~1.6	0.8~2.0	3.5	5.1	1000

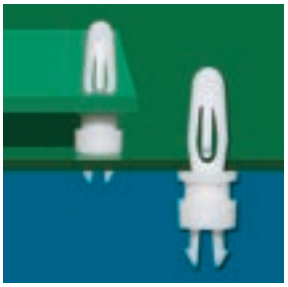

P.C. 板间隔柱 SPACER SUPPORT 3-30-1

- MATERIAL: NYLON 66(UL)
- FLAME CLASS: 94V-0/94V-2
- COLOR: NATURAL

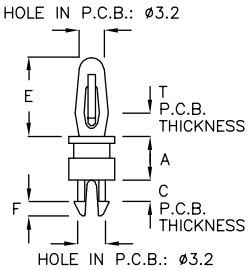

PART NO	A	T P.C.B. THICKNESS	C P.C.B. THICKNESS	E	F	PACKAGE
MCX−4A	4.8	1.4~1.6	1.4~1.6	8.7	1.6	2000
MCX−4GR	4.0	1.4~1.6	0.8~1.0	8.7	1.6	

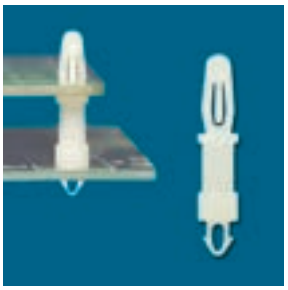

P.C. 板间隔柱 SPACER SUPPORT 3-30-2

- MATERIAL: NYLON 66(UL)
- FLAME CLASS: 94V-0/94V-2
- COLOR: NATURAL

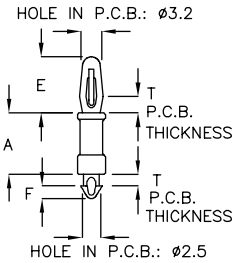

PART NO	A	T P.C.B. THICKNESS	E	F	PACKAGE
MCX−9C	9.5	1.4 ~ 1.6	8.7	2.0	2000

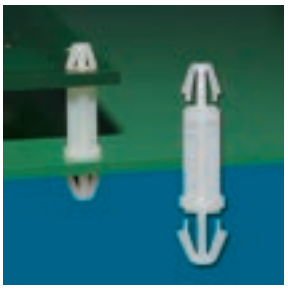

P.C. 板间隔柱 SPACER SUPPORT 3-30-3

- MATERIAL: NYLON 66(UL)
- FLAME CLASS: 94V-0/94V-2
- COLOR: NATURAL

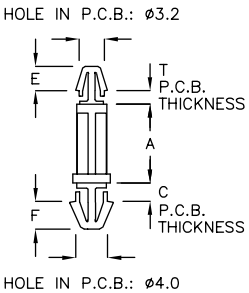

PART NO	A	T P.C.B. THICKNESS	C P.C.B. THICKNESS	E	F	PACKAGE
MCZ−10A	10.5	1.4~1.6	2.1~2.3	3.3	3.7	2000
MCZ−10MR	10.45	1.4~1.6	1.8~2.0	3.1	2.7	

P.C. 板间隔柱 SPACER SUPPORT 3-30-4

- MATERIAL: NYLON 66(UL)
- FLAME CLASS: 94V-0/94V-2
- COLOR: NATURAL

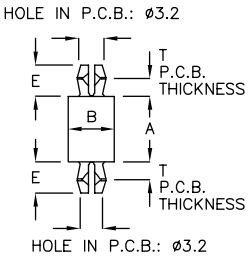

PART NO	A	B	T P.C.B. THICKNESS	E	PACKAGE
MCP−7A	7.9	ø5.6	1.4 ~ 1.6	3.8	2000

返回图片索引

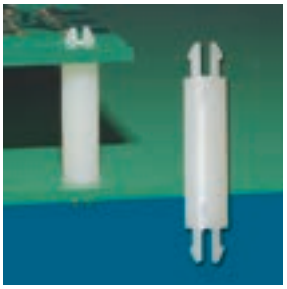

P.C. 板间隔柱 SPACER SUPPORT 3-31-1

- MATERIAL: NYLON 66(UL)
- FLAME CLASS: 94V-0/94V-2
- COLOR: NATURAL

PART NO	A	T P.C.B. THICKNESS	E	PACKAGE
UCD-10A	10.1	1.4 ~ 1.6	1.9	2000
UCD-11A	11.1	1.4 ~ 1.6	1.9	
UCD-16A	15.9	1.4 ~ 1.6	1.9	1000

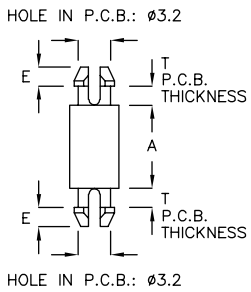

P.C. 板间隔柱 SPACER SUPPORT 3-31-2

- MATERIAL: NYLON 66(UL)
- FLAME CLASS: 94V-0/94V-2
- COLOR: NATURAL,BLACK

PART NO	A	T P.C.B. THICKNESS	E	PACKAGE
UCK-10F	10.1	1.4 ~ 1.6	1.9	2000

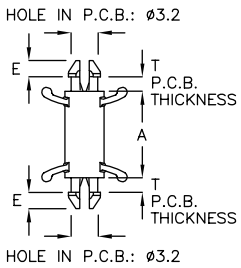

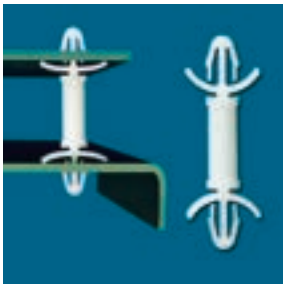

P.C. 板间隔柱 SPACER SUPPORT 3-31-3

- MATERIAL: NYLON 66(UL)
- FLAME CLASS: 94V-0/94V-2
- COLOR: NATURAL

PART NO	A	T P.C.B. THICKNESS	E	PACKAGE
LCS-14D	14.3	0.8~2.0	4.0	1000

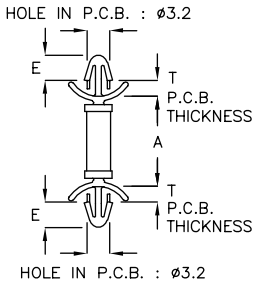

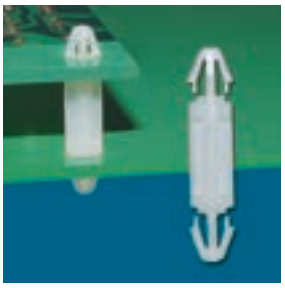

P.C. 板间隔柱 SPACER SUPPORT 3-31-4

- MATERIAL: NYLON 66(UL)
- FLAME CLASS: 94V-0/94V-2
- COLOR: NATURAL

PART NO	A	T P.C.B. THICKNESS	E	PACKAGE
MCU-10	10.3	1.4 ~ 1.6	3.4	2000

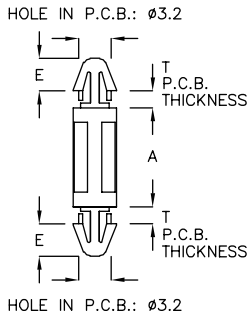

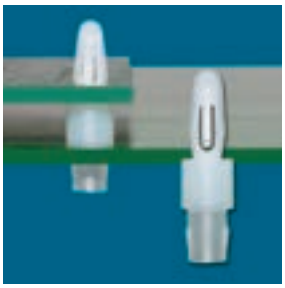

P.C. 板间隔柱 SPACER SUPPORT 3-31-5

- MATERIAL: NYLON 66(UL)
- FLAME CLASS: 94V-0/94V-2
- COLOR: NATURAL

PART NO	A	T P.C.B. THICKNESS	E	F	PACKAGE
TCU-4A	4.8	1.4 ~ 1.6	8.7	3.3	2000

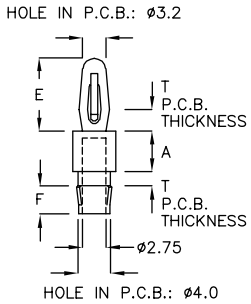

返回图片索引

P.C. 板间隔柱 SPACER SUPPORT 3-32-1

- MATERIAL: NYLON 66(UL)
- FLAME CLASS: 94V-0/94V-2
- COLOR: NATURAL

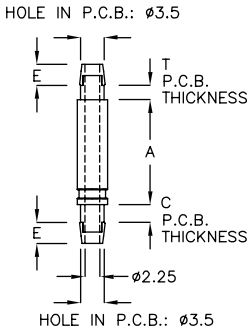

PART NO	A	T P.C.B. THICKNESS	C P.C.B. THICKNESS	E	PACKAGE
LCQ−15A	15.6	1.8～2.0	2.3～2.5	3.1	1000

P.C. 板间隔柱 SPACER SUPPORT 3-32-2

- MATERIAL: NYLON 66(UL)
- FLAME CLASS: 94V-0/94V-2
- COLOR: NATURAL

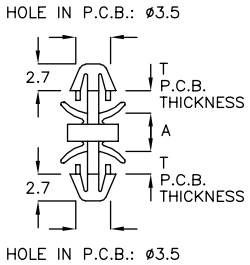

PART NO	A	T P.C.B. THICKNESS	PACKAGE
LBC−4A	5.0	1.2~1.6	1000

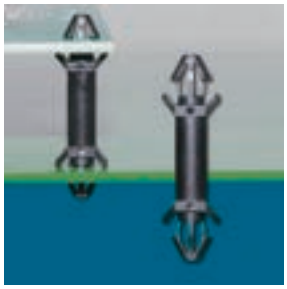

P.C. 板间隔柱 SPACER SUPPORT 3-32-3

- MATERIAL: NYLON 66(UL)
- FLAME CLASS: 94V-0/94V-2
- COLOR: NATURAL,BLACK

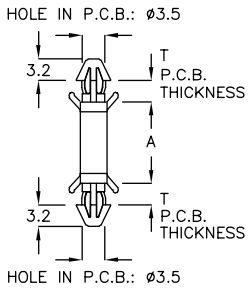

PART NO	A	T P.C.B. THICKNESS	PACKAGE
LCA35−13C	13.6	2.0~2.75	1000

P.C. 板间隔柱 SPACER SUPPORT 3-32-3

- MATERIAL: NYLON 66(UL)
- FLAME CLASS: 94V-0/94V-2
- COLOR: NATURAL

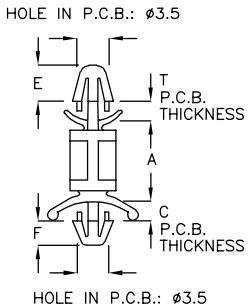

PART NO	A	T P.C.B. THICKNESS	C P.C.B. THICKNESS	E	F	PACKAGE
LBC−03	3.0	1.0~1.6	0.8~1.6	4.0	2.8	1000
LBC−04	4.0	1.0~1.6	0.8~1.6	4.0	2.8	
LBC−5A	5.0	1.0~1.6	0.8~1.6	4.0	2.8	
LBC−05	5.35	1.0~1.6	0.8~1.6	4.0	2.8	
LBC−6A	6.35	1.0~1.6	0.8~1.6	4.0	2.8	
LBC−06	6.75	1.0~1.6	0.8~1.6	4.0	2.8	
LBC−07	7.0	1.0~1.6	0.8~1.6	4.0	2.8	
LBC−7A	7.5	1.2~1.7	0.8~1.6	4.0	2.5	
LBC−8A	8.0	1.0~1.6	0.8~1.6	4.0	2.8	
LBC−08	8.35	1.0~1.6	0.8~1.6	4.0	2.8	
LBC−09	9.60	1.0~1.6	0.8~2.0	4.0	2.4	
LBC−11	11.2	1.0~1.6	0.8~2.0	4.0	2.4	
LBC−12	12.7	1.0~1.6	0.8~2.0	4.0	2.4	
LBC−16	16.0	1.0~1.6	0.8~2.0	4.0	2.4	

返回图片索引

P.C. 板间隔柱 SPACER SUPPORT 3-33-1

- MATERIAL: NYLON 66(UL)
- FLAME CLASS: 94V-0/94V-2
- COLOR: NATURAL

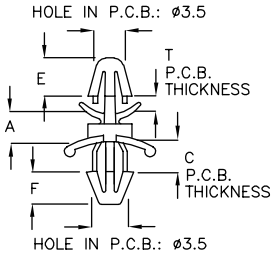

PART NO	A	T P.C.B. THICKNESS	C P.C.B. THICKNESS	E	F	PACKAGE
LBC−3A	3.4	1.0~1.6	2.0~2.4	4.0	3.4	1000

P.C. 板间隔柱 SPACER SUPPORT 3-33-2

- MATERIAL: NYLON 66(UL)
- FLAME CLASS: 94V-0/94V-2
- COLOR: NATURAL

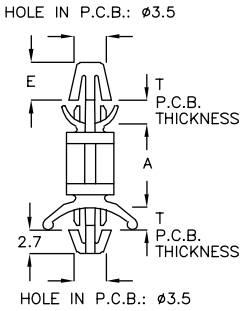

PART NO	A	T P.C.B. THICKNESS	E	PACKAGE
LBC−10	9.6	0.8~1.6	4.0	1000

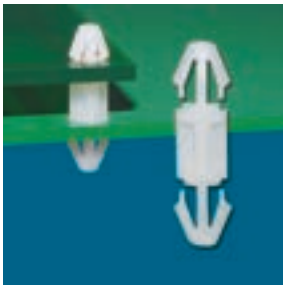

P.C. 板间隔柱 SPACER SUPPORT 3-33-3

- MATERIAL: NYLON 66(UL)
- FLAME CLASS: 94V-0/94V-2
- COLOR: NATURAL

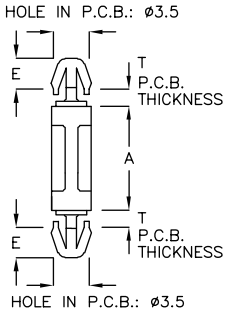

PART NO	A	T P.C.B. THICKNESS	E	PACKAGE
MCE−2A	2.5	1.4~1.8	3.75	2000
MCE−03	3.0	1.4~1.8	3.7	
MCE−3A	3.5	1.4~1.8	3.75	
MCE−4	4.0	1.4~1.8	3.7	
MCE−4A	4.5	1.4~1.8	3.75	
MCE−05	5.0	1.4~1.8	3.7	
MCE−5A	5.5	1.4~1.8	3.75	
MCE−6A	6.0	1.4~1.8	3.75	
MCE−6	6.35	1.4~1.8	3.7	
MCE−07	7.0	1.4~1.8	3.7	
MCE−7A	7.0	1.4~1.8	2.8	
MCE−8	8.0	1.4~1.8	3.7	
MCE−10	9.7	1.4~1.8	3.7	1000
MCE−12	12.7	1.4~1.8	3.7	
MCE−15A	15.0	1.4~1.6	2.8	

P.C. 板间隔柱 SPACER SUPPORT 3-33-4

- MATERIAL: NYLON 66(UL)
- FLAME CLASS: 94V-0/94V-2
- COLOR: NATURAL

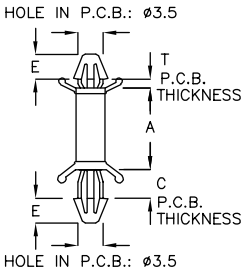

PART NO	A	E	T P.C.B. THICKNESS	C P.C.B. THICKNESS	PACKAGE
LMA−3A	3.6	3.2	0.8~1.6	2.0~2.6	1000
LMA−27	27.5	3.5	0.4~1.1	2.5~3.6	500

返回图片索引

P.C. 板间隔柱 SPACER SUPPORT 3-34-1

- MATERIAL: NYLON 66(UL)
- FLAME CLASS: 94V-0/94V-2
- COLOR: NATURAL

PART NO	A	T P.C.B. THICKNESS	E	PACKAGE
MCW-20	20.0	1.2~1.6	3.4	1000

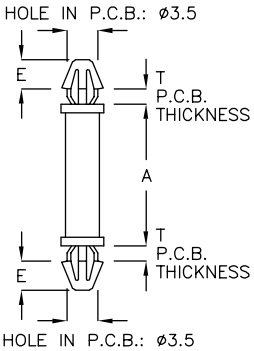

P.C. 板间隔柱 SPACER SUPPORT 3-34-2

- MATERIAL: NYLON 66(UL)
- FLAME CLASS: 94V-0/94V-2
- COLOR: NATURAL

PART NO	A	T P.C.B. THICKNESS	E	PACKAGE
LCA35-3	2.1	0.8~2.0	3.5	1000
LCA35-3A	3.0	0.8~2.0	3.4	
LCA35-3M	3.5	0.8~2.0	3.4	
LCA35-4	4.0	0.8~2.0	3.4	
LCA35-5	4.8	0.8~2.0	3.5	
LCA35-5M	5.5	0.8~2.0	3.4	
LCA35-7	7.0	0.8~2.0	3.5	
LCA35-10	10.0	0.8~2.0	3.5	
LCA35-18	18.0	1.1~1.7	3.5	
LCA35-20	20.0	1.0~1.6	3.5	
LCA35-21	20.8	1.2~1.6	3.5	
LCA35-25	25.0	1.4~1.6	3.4	500

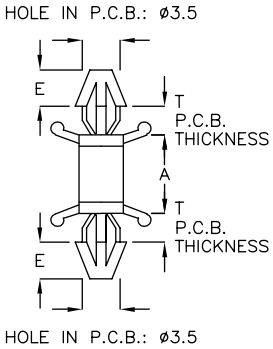

P.C. 板间隔柱 SPACER SUPPORT 3-34-3

- MATERIAL: NYLON 66(UL)
- FLAME CLASS: 94V-0/94V-2
- COLOR: NATURAL,BLACK

PART NO	A	T P.C.B. THICKNESS	E	PACKAGE
LCA35-3H	3.05	0.3~0.6	3.4	1000

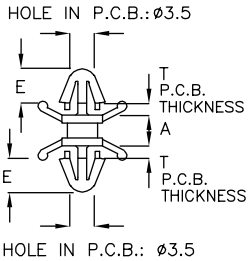

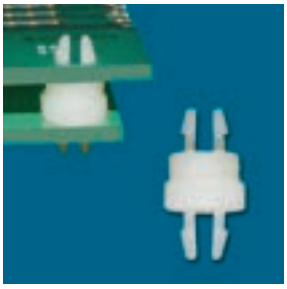

P.C. 板间隔柱 SPACER SUPPORT 3-34-4

- MATERIAL: NYLON 66(UL)
- FLAME CLASS: 94V-0/94V-2
- COLOR: NATURAL

PART NO	A	T P.C.B. THICKNESS	E	PACKAGE
UCB-5A	4.8	1.4 ~ 1.6	2.6	2000

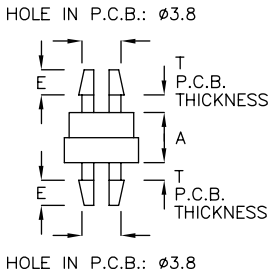

返回图片索引

P.C. 板间隔柱 SPACER SUPPORT 3-35-1

- MATERIAL: NYLON 66(UL)
- FLAME CLASS: 94V-0/94V-2
- COLOR: NATURAL

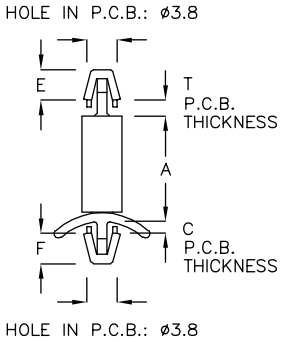

PART NO	A	T P.C.B. THICKNESS	C P.C.B. THICKNESS	E	F	PACKAGE
LCF−18A	17.8	1.4 ~ 1.6	0.6~1.0	3.5	3.6	1000

P.C. 板间隔柱 SPACER SUPPORT 3-35-2

- MATERIAL: NYLON 66(UL)
- FLAME CLASS: 94V-0/94V-2
- COLOR: NATURAL

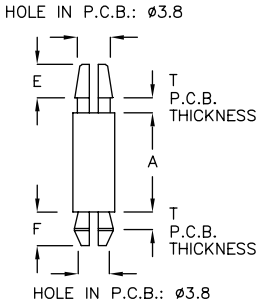

PART NO	A	T P.C.B. THICKNESS	E	F	PACKAGE
MCB−19K	19.0	1.4~1.6	4.0	3.8	1000

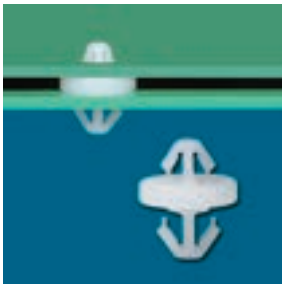

P.C. 板间隔柱 SPACER SUPPORT 3-35-3

- MATERIAL: NYLON 66(UL)
- FLAME CLASS: 94V-0/94V-2
- COLOR: NATURAL

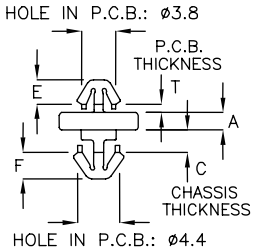

PART NO	A	T P.C.B. THICKNESS	C CHASSIS THICKNESS	E	F	PACKAGE
MCQA−2HC	2.0	0.8	2.2	2.8	3.0	2000

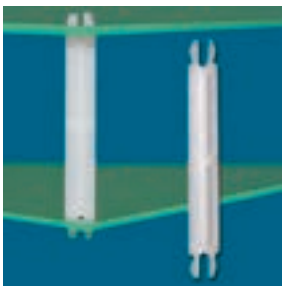

P.C. 板间隔柱 SPACER SUPPORT 3-35-4

- MATERIAL: NYLON 66(UL)
- FLAME CLASS: 94V-0/94V-2
- COLOR: NATURAL

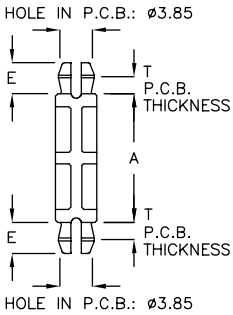

PART NO	A	T P.C.B. THICKNESS	E	PACKAGE
UCH−29AM	29.0	1.0~1.6	3.6	500

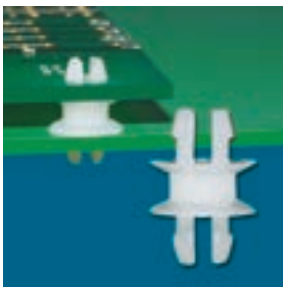

P.C. 板间隔柱 SPACER SUPPORT 3-35-5

- MATERIAL: NYLON 66(UL)
- FLAME CLASS: 94V-0/94V-2
- COLOR: NATURAL

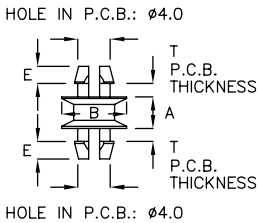

PART NO	A	B	T P.C.B. THICKNESS	E	PACKAGE
MCR−3A	3.6	ø7.4	1.4 ~ 1.6	2.0	2000

返回图片索引

P.C. 板间隔柱 SPACER SUPPORT 3-36-1

- MATERIAL: NYLON 66(UL)
- FLAME CLASS: 94V-0/94V-2
- COLOR: NATURAL

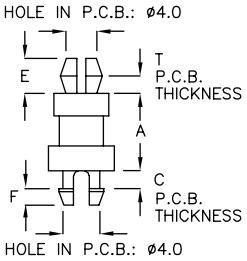

PART NO	A	T P.C.B. THICKNESS	C P.C.B. THICKNESS	E	F	PACKAGE
MCB−8A	7.9	1.0~1.6	1.4~1.6	3.6	2.0	2000

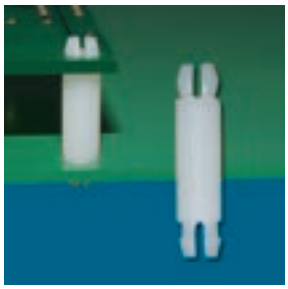

P.C. 板间隔柱 SPACER SUPPORT 3-36-2

- MATERIAL: NYLON 66(UL)
- FLAME CLASS: 94V-0/94V-2
- COLOR: NATURAL

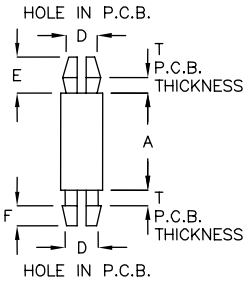

PART NO	A	D HOLE IN CHASSIS	E	F	T P.C.B. THICKNESS	PACKAGE
MCB−3	3.2	ø4.0	3.6~3.8	2.1	0.8~1.6	2000
MCB−6	6.35	ø4.0	3.6~3.8	2.2	0.8~1.6	
MCB−8	8.2	ø4.0	3.6~3.8	2.2	0.8~1.6	
MCB−10	10.5	ø4.0	3.6~3.8	2.1	0.8~1.6	
MCB−12	12.7	ø4.0	3.6~3.8	2.2	0.8~1.6	
MCB−15	15.7	ø4.0	3.6~3.8	2.2	0.8~1.6	1000
MCB−19	19.1	ø4.0	3.6~3.8	2.2	0.8~1.6	
MCB−28	28.5	ø3.85	3.6~3.8	1.9	1.4~1.6	
MCB−30A	30.7	ø3.85	3.6~3.8	1.8	0.8~1.6	

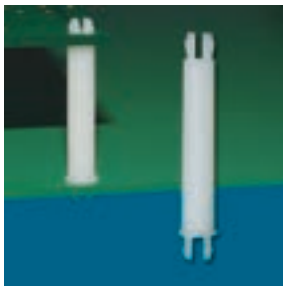

P.C. 板间隔柱 SPACER SUPPORT 3-36-3

- MATERIAL: NYLON 66(UL)
- FLAME CLASS: 94V-0/94V-2
- COLOR: NATURAL

PART NO	A	T P.C.B. THICKNESS	E	F	PACKAGE
MCB−24	24.1	1.2~1.6	3.6	1.9	1000

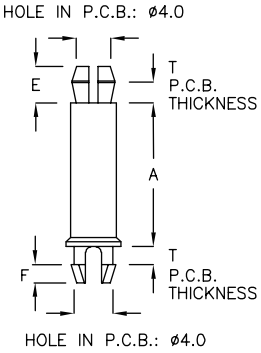

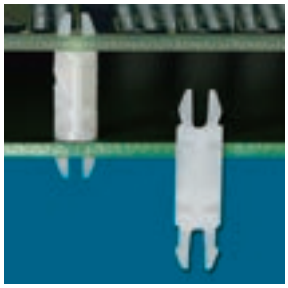

P.C. 板间隔柱 SPACER SUPPORT 3-36-4

- MATERIAL: NYLON 66(UL)
- FLAME CLASS: 94V-0/94V-2
- COLOR: NATURAL

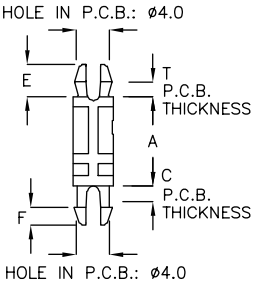

PART NO	A	T P.C.B. THICKNESS	C P.C.B. THICKNESS	E	F	PACKAGE
MCB−10K	10.5	0.8	2.2~2.3	3.8	2.1	2000

返回图片索引

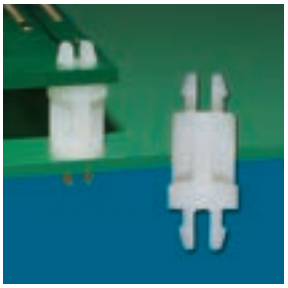

P.C. 板间隔柱 SPACER SUPPORT 3-37-1

- MATERIAL: NYLON 66(UL)
- FLAME CLASS: 94V-0/94V-2
- COLOR: NATURAL

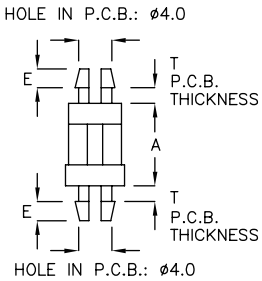

PART NO	A	T P.C.B. THICKNESS	E	PACKAGE
UCB-9M	9.5	1.2~1.6	2.4	1000

P.C. 板间隔柱 SPACER SUPPORT 3-37-2

- MATERIAL: NYLON 66(UL)
- FLAME CLASS: 94V-0/94V-2
- COLOR: NATURAL

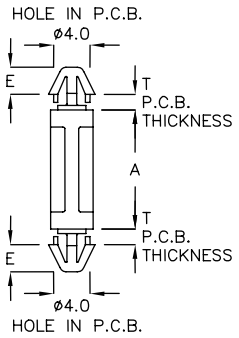

PART NO	A	E	T P.C.B. THICKNESS	PACKAGE
KCA-2M	2.5	3.0	1.4~1.6	2000
KCA-3	3.2	3.6	1.4~1.6	
KCA-04	4.0	3.8	1.4~1.6	
KCA-4A	4.5	3.6	1.4~1.6	
KCA-5	5.0	3.6	1.4~1.6	1000
KCA-5A	5.5	3.6	1.4~1.6	
KCA-6	6.35	3.6	1.4~1.6	
KCA-07	7.0	3.0	1.2~1.7	
KCA-7A	7.5	3.6	1.4~1.6	
KCA-8	8.0	3.6	1.4~1.6	
KCA-9	9.5	3.6	1.4~1.6	
KCA-10	10.5	3.6	1.4~1.6	
KCA-11	11.0	3.6	1.4~1.6	
KCA-12	12.7	3.6	1.4~1.6	
KCA-12S	12.7	3.2	1.4~1.6	

PART NO	A	E	T P.C.B. THICKNESS	PACKAGE
KCA-14	14.0	3.0	1.4~1.6	1000
KCA-15	15.7	3.6	1.4~1.6	
KCA-15L	15.9	3.0	1.2~1.7	
KCA-19	19.0	3.6	1.4~1.6	
KCA-20	19.9	3.6	1.4~1.6	
KCA-25	25.0	3.7	1.4~1.6	
KCA-28A	28.5	3.5	1.4~1.6	500
KCA-30	30.0	3.7	1.4~1.6	
KCA-34	34.0	3.6	1.4~1.6	
KCA-34A	34.0	3.6	1.4~1.6	
KCA-40A	40.4	3.6	1.4~1.6	
KCA-47	47.0	3.25	1.4~1.6	200
KCA-69	69.0	3.7	1.4~1.6	
KCA-80	80.0	3.0	1.4~1.6	

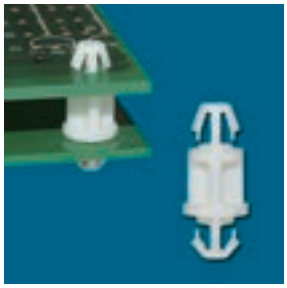

P.C. 板间隔柱 SPACER SUPPORT 3-37-3

- MATERIAL: NYLON 66(UL)
- FLAME CLASS: 94V-0/94V-2
- COLOR: NATURAL

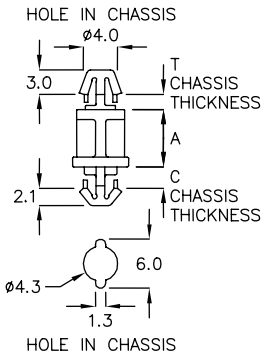

Built-In Anti-Spin Function

PART NO	A	C CHASSIS THICKNESS	T CHASSIS THICKNESS	PACKAGE
MQT-7CL	7.0	2.36	1.6	2000

返回图片索引

P.C. 板间隔柱 SPACER SUPPORT 3-38-1

- MATERIAL: NYLON 66(UL)
- FLAME CLASS: 94V-0/94V-2
- COLOR: NATURAL

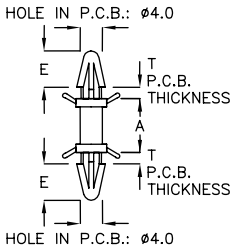

FORM. 1

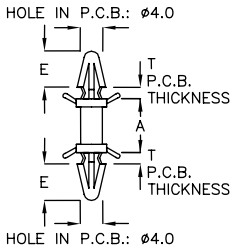

FORM. 2

PART NO	A	T P.C.B. THICKNESS	E	FORM	PACKAGE
LCAS−3	3.5	0.8~1.8	7.0	1	1000
LCAS−10	10.5	0.8~1.8	7.0	1	
LCAS−15	14.8	0.8~1.8	7.0	2	
LCAS−16M	16.6	0.8~1.8	7.0	2	
LCAS−44	44.0	0.8~1.8	6.0	2	200
LCBS−48	47.8	0.8~1.8	7.0	2	

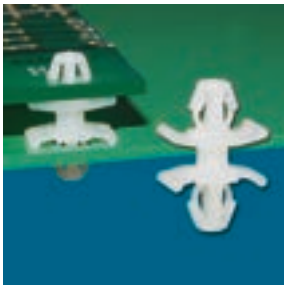

P.C. 板间隔柱 SPACER SUPPORT 3-38-2

- MATERIAL: NYLON 66(UL)
- FLAME CLASS: 94V-0/94V-2
- COLOR: NATURAL

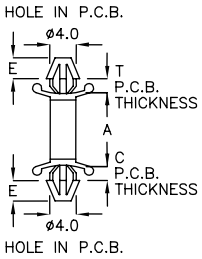

PART NO	A	T P.C.B. THICKNESS	C P.C.B. THICKNESS	E	PACKAGE
LCA4−4	4.0	1.0~1.6	1.0~1.6	3.4	1000
LCA4−5	4.8	1.6~1.9	1.6~1.9	3.0	
LCA4−6	6.0	1.0~1.6	1.0~1.6	3.4	
LCA4−7	7.0	1.0~1.6	1.0~1.6	3.4	
LCA4−8	7.1	1.2~1.8	1.2~1.8	3.6	
LCA4−8A	7.6	2.5~3.0	2.5~3.0	2.6	
LCA4−9	8.8	1.6~2.0	1.6~2.0	3.0	
LCA4−10	10.0	1.2~2.0	1.2~2.0	3.6	
LCA4−10A	10.4	1.1~1.8	1.6~3.1	3.6	
LCA4−12	13.1	1.1~2.0	1.1~2.0	3.6	
LCA4−15	15.9	1.1~2.0	1.1~2.0	3.6	
LCA4−16	16.2	1.3~2.2	1.3~2.2	3.6	

PART NO	A	T P.C.B. THICKNESS	C P.C.B. THICKNESS	E	PACKAGE
LCA4−17	17.2	1.1~2.0	1.1~2.0	3.6	1000
LCA4−20A	19.6	1.1~2.0	1.7~3.5	3.6	500
LCA4−29M	29.8	1.0~1.7	1.0~1.7	3.6	
LCA4−31	30.8	1.0~1.7	1.0~1.7	3.6	
LCA4−34A	34.0	1.1~1.9	1.6~3.1	3.6	
LCA4−34C	34.0	0.8~2.0	1.7~3.5	3.6	
LCA4−36	36.0	2.0~3.0	2.0~3.0	3.6	
LCA4−36A	35.3	2.5~3.8	2.5~3.8	3.6	
LCA4−44	43.6	0.8~1.9	0.8~1.9	3.6	
LCA4−55	55.0	0.8~1.8	0.8~1.8	3.6	200
LCA4−56	56.4	1.0~1.6	1.0~1.6	3.6	

P.C. 板间隔柱 SPACER SUPPORT 3-38-3

- MATERIAL: NYLON 66(UL)
- FLAME CLASS: 94V-0/94V-2
- COLOR: NATURAL

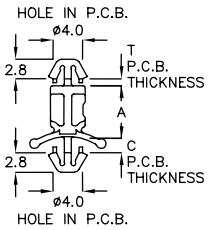

PART NO	A	C P.C.B. THICKNESS	T P.C.B. THICKNESS	PACKAGE
LCFA−7K	7.6	0.8~1.2	0.8	1000

返回图片索引

P.C. 板间隔柱 SPACER SUPPORT 3-39-1

- MATERIAL: NYLON 66(UL)
- FLAME CLASS: 94V-0/94V-2
- COLOR: NATURAL

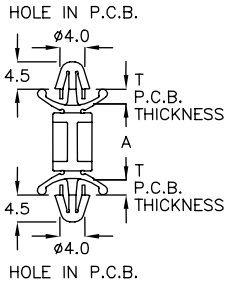

PART NO	A	T P.C.B. THICKNESS	PACKAGE
LTQB−12CH	12.7	0.8~1.7	1000

P.C. 板间隔柱 SPACER SUPPORT 3-39-2

- MATERIAL: NYLON 66(UL)
- FLAME CLASS: 94V-0/94V-2
- COLOR: NATURAL,BLACK

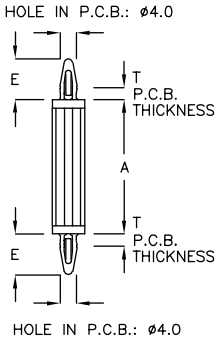

PART NO	A	T P.C.B. THICKNESS	E	PACKAGE
LCD−151	151.8	1.8~2.0	10.0	100

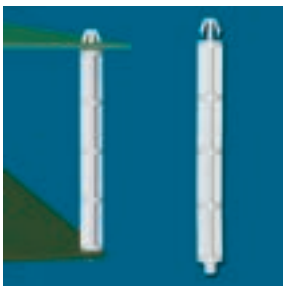

P.C. 板间隔柱 SPACER SUPPORT 3-39-3

- MATERIAL: NYLON 66(UL)
- FLAME CLASS: 94V-0/94V-2
- COLOR: NATURAL

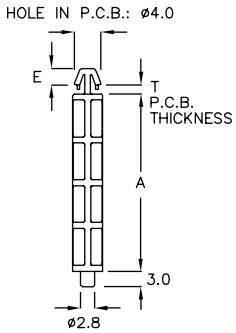

PART NO	A	T P.C.B. THICKNESS	E	PACKAGE
MQW−51A	51.7	1.6	3.3	500

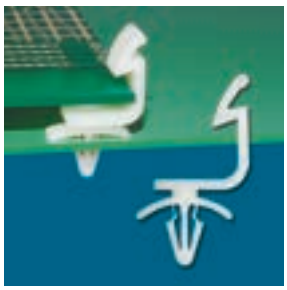

P.C. 板间隔柱 SPACER SUPPORT 3-39-4

- MATERIAL: NYLON 66(UL)
- FLAME CLASS: 94V-0/94V-2
- COLOR: NATURAL

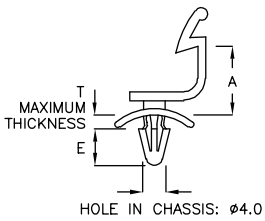

PART NO	A	T MAXIMUM THICKNESS	E	PACKAGE
LLS−12	12.6	2.0	6.6	500

返回图片索引

P.C. 板间隔柱 SPACER SUPPORT 3-40-1

- MATERIAL: NYLON 66(UL)
- FLAME CLASS: 94V-0/94V-2
- COLOR: NATURAL

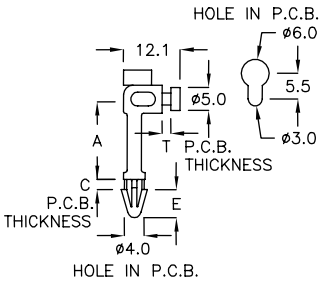

PART NO	A	T P.C.B. THICKNESS	C P.C.B. THICKNESS	E	PACKAGE
LTU−20	20.0	1.7	1.7	6.0	500
LTU−20A	20.0	1.7	2.0	6.0	

P.C. 板间隔柱 SPACER SUPPORT 3-40-2

- MATERIAL: NYLON 66(UL)
- FLAME CLASS: 94V-0/94V-2
- COLOR: NATURAL

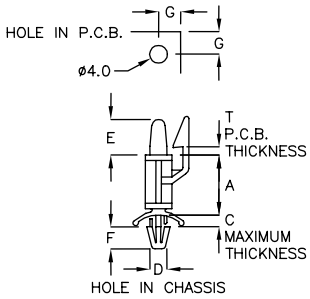

PART NO	A	B	C MAXIMUM THICKNESS	D HOLE IN CHASSIS	E	F	G	T P.C.B. THICKNESS	PACKAGE
LT−10	9.2	5.5	2.0	ø4.0	7.4	5.2	5.0	0.8~2.0	500
LT−12	11.9	5.5	2.0	ø4.0	7.35	4.5	5.0	0.8~2.0	
LT−15	15.1	5.5	2.0	ø4.0	7.4	5.2	5.0	0.8~2.0	
LT−18	17.2	5.5	2.0	ø4.0	7.35	5.2	5.0	0.8~2.0	
LT−26	26.2	6.4	2.0	ø5.0	15.0	5.2	6.0	0.8~2.0	

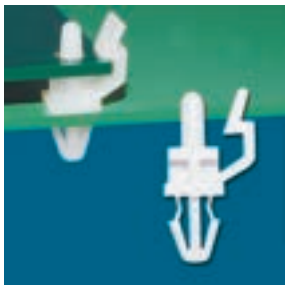

P.C. 板间隔柱 SPACER SUPPORT 3-40-3

- MATERIAL: NYLON 66(UL)
- FLAME CLASS: 94V-0/94V-2
- COLOR: NATURAL

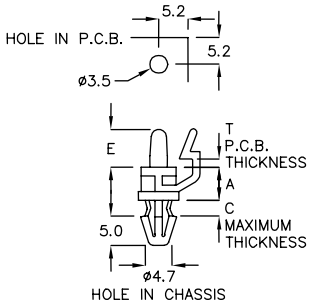

PART NO	A	C MAXIMUM THICKNESS	E	T P.C.B. THICKNESS	PACKAGE
LTG−5A	5.7	2.4	6.5	0.8~1.0	1000

P.C. 板间隔柱 SPACER SUPPORT 3-40-4

- MATERIAL: NYLON 66(UL)
- FLAME CLASS: 94V-0/94V-2
- COLOR: NATURAL

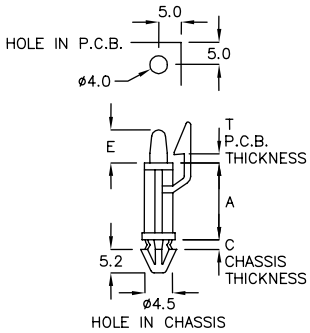

PART NO	A	C CHASSIS THICKNESS	E	T P.C.B. THICKNESS	PACKAGE
LT−08A	7.5	1.2~1.6	7.0	1.4~1.6	500
LT−18A	18.8	1.0~1.4	7.3	1.4~1.6	

返回图片索引

P.C. 板间隔柱 SPACER SUPPORT 3-41-1

- MATERIAL: NYLON 66(UL)
- FLAME CLASS: 94V-0/94V-2
- COLOR: NATURAL

PART NO	A	T P.C.B. THICKNESS	C P.C.B. THICKNESS	E	PACKAGE
LCWS−12	12.7	1.4~1.6	0.8~2.0	4.8	500

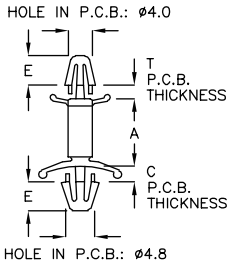

P.C. 板间隔柱 SPACER SUPPORT 3-41-2

- MATERIAL: NYLON 66(UL)
- FLAME CLASS: 94V-0/94V-2
- COLOR: NATURAL

PART NO	A	T P.C.B. THICKNESS	C P.C.B. THICKNESS	E	F	FORM	PACKAGE
LCBS−5	5.0	0.8~1.7	0.8~1.7	7.1	6.1	1	1000
LCBS−6	6.35	0.8~1.7	0.8~1.7	7.1	6.1	1	
LCBS−10	10.0	0.8~1.7	0.8~1.7	7.1	6.1	1	500
LCBS−15	15.0	0.8~1.7	0.8~1.7	7.1	5.7	1	
LCBS−20	20.0	0.8~1.7	0.8~1.7	7.1	5.7	1	
LCBS−25	25.0	0.8~1.7	0.8~1.7	7.1	5.7	1	
LCBS−29	29.0	0.8~1.7	0.8~1.7	7.1	6.1	2	
LCBS−30	30.0	1.0~2.0	1.0~2.0	7.0	6.0	2	
LCBS−35	35.0	0.8~1.7	0.8~1.7	7.1	6.1	1	
LCBS−37KM	37.7	0.8~1.7	1.0~2.0	7.1	6.0	2	
LCBS−38	38.0	0.8~1.7	0.8~1.7	7.1	6.1	1	
LCBS−45	45.0	0.8~1.7	0.8~1.7	7.1	6.1	1	

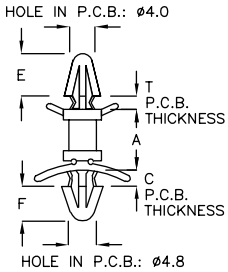

FORM.1

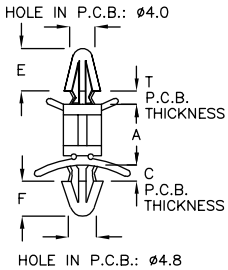

FORM.2

P.C. 板间隔柱 SPACER SUPPORT 3-41-3

- MATERIAL: NYLON 66(UL)
- FLAME CLASS: 94V-0/94V-2
- COLOR: NATURAL

PART NO	A	T P.C.B. THICKNESS	C P.C.B. THICKNESS	E	F	PACKAGE
LCBS−20QT	20.0	0.8~1.7	1.5~2.5	6.7	5.7	500

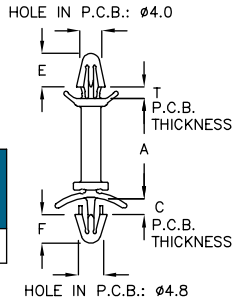

P.C. 板间隔柱 SPACER SUPPORT 3-41-4

- MATERIAL: NYLON 66(UL)
- FLAME CLASS: 94V-0/94V-2
- COLOR: NATURAL

PART NO	A	T P.C.B. THICKNESS	E	F	PACKAGE
LCBS−44	43.65	0.8~1.7	4.0	4.0	500

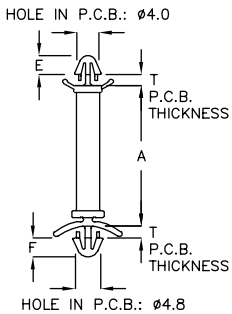

返回图片索引

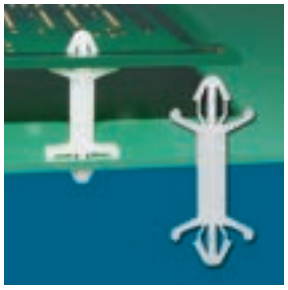

P.C. 板间隔柱 SPACER SUPPORT 3-42-1

- MATERIAL: NYLON 66(UL)
- FLAME CLASS: 94V-0/94V-2
- COLOR: NATURAL

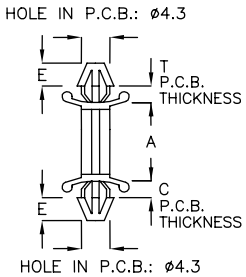

PART NO	A	T P.C.B. THICKNESS	C P.C.B. THICKNESS	E	PACKAGE
LCK−20	14.6	0.6	0.8～1.0	3.4	1000
LCK−27	21.2	0.6	1.4～1.6	3.4	

P.C. 板间隔柱 SPACER SUPPORT 3-42-2

- MATERIAL: NYLON 66(UL)
- FLAME CLASS: 94V-0/94V-2
- COLOR: NATURAL

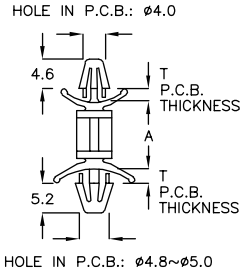

PART NO	A	T P.C.B. THICKNESS	PACKAGE
LTBS−6	6.35	0.8~1.7	500
LTBS−10	9.4	0.8~1.7	
LTBS−12	12.7	0.8~1.7	
LTBS−15	15.9	0.8~1.7	
LTBS−19	19.1	0.8~1.7	
LTBS−21	20.5	0.8~1.7	
LTBS−22	22.2	0.8~1.7	

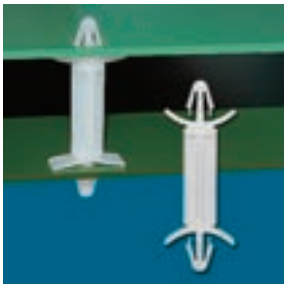

P.C. 板间隔柱 SPACER SUPPORT 3-42-3

- MATERIAL: NYLON 66(UL)
- FLAME CLASS: 94V-0/94V-2
- COLOR: NATURAL

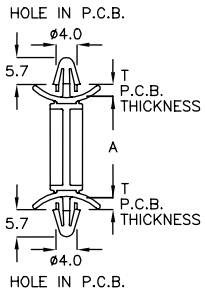

PART NO	A	T P.C.B. THICKNESS	PACKAGE
LTQM−22A	22.5	0.8~2.0	500

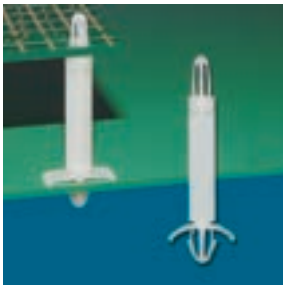

P.C. 板间隔柱 SPACER SUPPORT 3-42-4

- MATERIAL: NYLON 66(UL)
- FLAME CLASS: 94V-0/94V-2
- COLOR: NATURAL

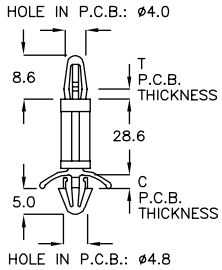

PART NO	T P.C.B. THICKNESS	C P.C.B. THICKNESS	PACKAGE
LCC−28A	1.2~1.6	0.5~2.0	500

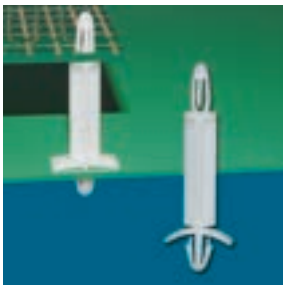

P.C. 板间隔柱 SPACER SUPPORT 3-42-5

- MATERIAL: NYLON 66(UL)
- FLAME CLASS: 94V-0/94V-2
- COLOR: NATURAL

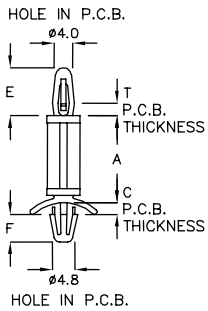

PART NO	A	C P.C.B. THICKNESS	T P.C.B. THICKNESS	E	F	PACKAGE
★ LCC−10K	9.5	0.8~2.0	1.2~1.6	10.2	5.6	500
LCC−16KF	15.9	0.8~2.0	1.2~1.7	10.2	5.0	500
LCC−22TB	22.2	0.8~2.0	1.2~1.6	10.2	5.6	1000
LCC−25QT	25.4	0.8~2.0	1.2~1.7	10.2	5.0	500
LCC−25A	25.8	0.8~1.6	1.2~1.6	10.2	5.9	1000
LCC−28C	28.6	0.8~2.0	1.2~1.6	10.2	5.9	500

返回图片索引

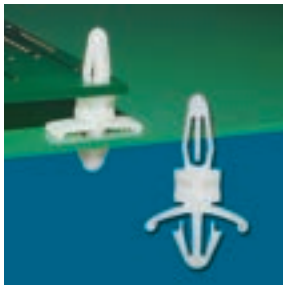

P.C. 板间隔柱 SPACER SUPPORT 3-43-1

- MATERIAL: NYLON 66(UL)
- FLAME CLASS: 94V-0/94V-2
- COLOR: NATURAL

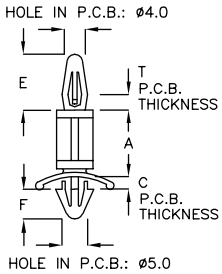

PART NO	A	T P.C.B. THICKNESS	C P.C.B. THICKNESS	E	F	PACKAGE
LCC-5	4.8	1.2~1.6	1.0~2.2	10.7	5.5	500
LCC-6	6.35	1.2~1.6	1.0~2.2	10.7	5.5	
LCC-10	9.6	1.2~1.6	1.0~2.2	10.7	5.5	
LCC-12	12.7	1.2~1.6	1.0~2.2	10.7	5.5	
LCC-15	15.9	1.2~1.6	1.0~2.2	10.7	5.5	

P.C. 板间隔柱 SPACER SUPPORT 3-43-2

- MATERIAL: NYLON 66(UL)
- FLAME CLASS: 94V-0/94V-2
- COLOR: NATURAL

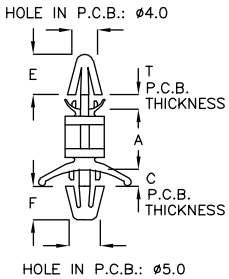

PART NO	A	T P.C.B. THICKNESS	C P.C.B. THICKNESS	E	F	PACKAGE
LBB-10	9.6	0.8~1.7	0.8~2.0	5.8	5.1	1000

P.C. 板间隔柱 SPACER SUPPORT 3-43-3

- MATERIAL: NYLON 66(UL)
- FLAME CLASS: 94V-0/94V-2
- COLOR: NATURAL

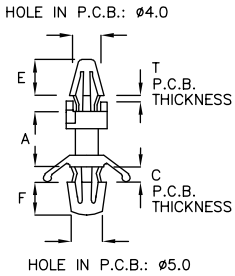

PART NO	A	T P.C.B. THICKNESS	C P.C.B. THICKNESS	E	F	PACKAGE
CBS-5	4.8	0.8~1.9	0.5~2.2	6.0	5.5	1000
CBS-6	6.35	0.8~1.9	0.5~2.2	6.0	5.5	
CBS-10	9.2	0.8~1.9	0.5~2.2	6.0	5.5	
CBS-12	12.7	0.8~1.9	0.5~2.2	6.0	5.5	
CBS-15	15.9	0.8~1.9	0.5~2.2	6.0	5.5	500
CBS-19	19.0	0.8~1.9	0.5~2.2	6.0	5.5	
CBS-25	25.4	0.8~1.9	0.5~2.2	6.0	5.5	
CBS-28	28.5	0.8~1.9	0.5~2.2	6.0	5.5	
CBS-35	35.0	0.8~1.9	0.5~2.2	6.0	5.5	

返回图片索引

P.C. 板间隔柱 SPACER SUPPORT 3-44-1

- MATERIAL: NYLON 66(UL)
- FLAME CLASS: 94V-0/94V-2
- COLOR: NATURAL

PART NO	T P.C.B. THICKNESS	PACKAGE
WCB-6	1.2~1.6	1000

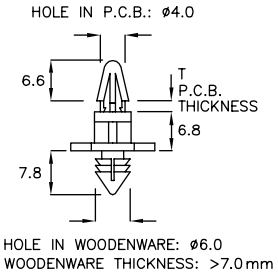

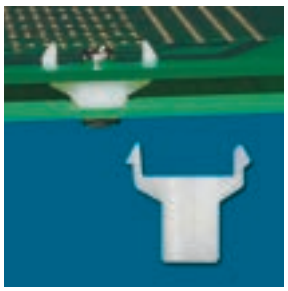

P.C. 板间隔柱 SPACER SUPPORT 3-44-2

- MATERIAL: NYLON 66(UL)
- FLAME CLASS: 94V-0/94V-2
- COLOR: NATURAL

PART NO	A	D SCREW	PACKAGE
L-16	12.0	M3.0 x 19.0	500
L-16S	5.0	M3.0 x 12.0	1000

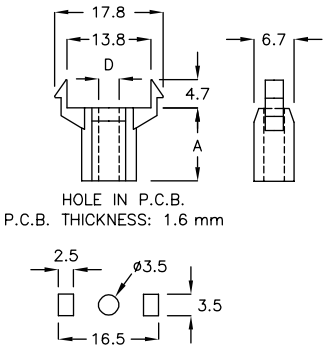

P.C. 板间隔柱 SPACER SUPPORT 3-44-3

- MATERIAL: NYLON 66(UL)
- FLAME CLASS: 94V-0/94V-2
- COLOR: NATURAL

PART NO	A	D SCREW	PACKAGE
L-9A	9.4	M3.0X16.0	1000

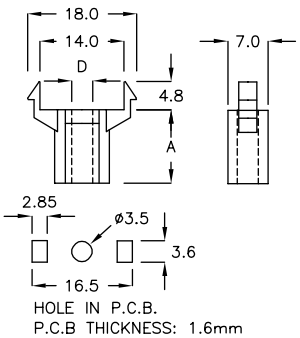

P.C. 板间隔柱 SPACER SUPPORT 3-44-4

- MATERIAL: NYLON 66(UL)
- FLAME CLASS: 94V-0/94V-2
- COLOR: NATURAL

PART NO	A	T P.C.B. THICKNESS	E	PACKAGE
PCE-1AL	1.5	1.4~1.6	2.0	2000
PCE-2L	2.0	1.4~1.6	2.0	
PCE-2M	2.5	1.4~1.6	2.0	
PCE-3L	3.0	1.4~1.6	2.0	
PCE-3M	3.5	1.4~1.6	2.0	
PCE-04	4.0	1.4~1.6	2.0	
PCE-4EW	4.5	1.4~1.6	2.0	
PCE-5BZ	5.0	1.4~1.6	2.0	

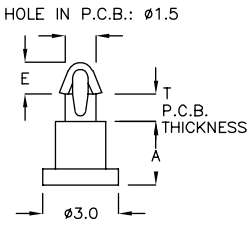

返回图片索引

P.C. 板间隔柱 SPACER SUPPORT 3-45-1

- MATERIAL: NYLON 66(UL)
- FLAME CLASS: 94V-0/94V-2
- COLOR: NATURAL

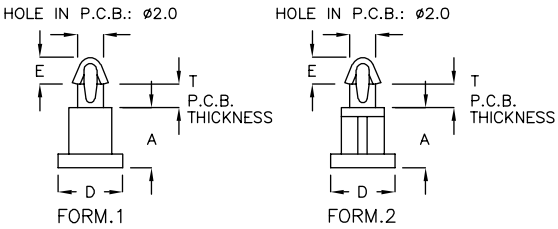

PART NO	A	D	T P.C.B. THICKNESS	E	FORM	PACKAGE
PCE-1A	1.5	ø4.8	1.4~1.6	2.0	1	
PCE-1C	1.8	ø4.2	1.4~1.6	2.0	1	
PCE-02	2.0	ø4.2	1.4~1.6	2.3	1	
PCE-2A	2.5	ø4.8	1.4~1.6	2.0	1	
PCE-2C	2.0	ø4.8	1.8~2.0	2.0	1	
PCE-2D	2.9	ø4.2	1.4~1.6	2.3	1	
PCE-2F	2.0	ø4.2	0.8~1.0	2.0	1	
PCE-2H	2.2	ø4.2	1.0~1.2	2.0	1	
PCE-2K	1.8	ø4.2	1.0~1.2	2.0	1	
PCE-2XC	2.15	ø4.2	1.4~1.6	2.0	1	
PCE-03	3.0	ø4.2	1.4~1.6	2.0	1	
PCE-3A	2.6	ø4.1	1.4~1.6	2.0	1	
PCE-3DF	3.2	ø4.8	1.4~1.6	2.1	1	
PCE-3K	3.5	ø4.8	1.4~1.6	2.0	1	
PCE-3PW	3.85	ø6.0	1.4~1.6	2.0	1	
PCE-3RY	3.75	ø4.8	1.4~1.6	2.0	1	2000
PCE-4A	4.0	ø4.8	1.4~1.6	2.1	1	
PCE-4F	4.7	ø4.8	1.4~1.6	2.0	1	
PCE-4M	4.5	ø4.8	1.4~1.6	2.0	1	
PCE-05	5.0	ø4.8	1.4~1.6	2.0	1	
PCE-5JD	5.0	ø4.8	1.0~1.2	2.0	1	
PCE-5QR	5.0	ø6.0	1.4~1.6	2.0	2	
PCE-5TS	5.3	ø4.8	0.8~1.0	2.3	1	
PCE-5K	5.6	ø4.8	1.4~1.6	2.0	1	
PCE-06	6.0	ø4.8	1.4~1.6	2.1	1	
PCE-6A	6.5	ø4.8	1.4~1.6	2.2	1	
PCE-6C	6.5	ø4.8	1.4~1.6	2.0	1	
PCE-6NS	6.5	ø6.0	1.4~1.6	2.0	2	
PCE-07	7.0	ø4.2	1.0~1.2	2.0	1	
PCE-08	8.0	ø4.8	1.4~1.6	3.0	1	
PCE-09	9.0	ø5.0	1.4~1.6	2.0	1	

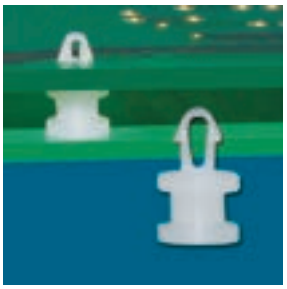

P.C. 板间隔柱 SPACER SUPPORT 3-45-2

- MATERIAL: NYLON 66(UL)
- FLAME CLASS: 94V-0/94V-2
- COLOR: NATURAL

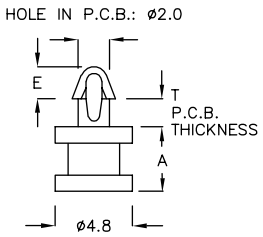

PART NO	A	T P.C.B. THICKNESS	E	PACKAGE
PCE-4D	4.0	1.4~1.6	2.1	2000

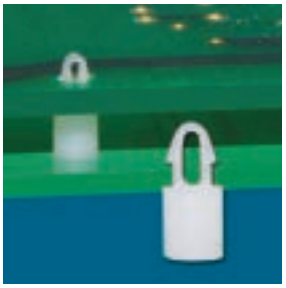

P.C. 板间隔柱 SPACER SUPPORT 3-46-1

- MATERIAL: NYLON 66(UL)
- FLAME CLASS: 94V-0/94V-2
- COLOR: NATURAL

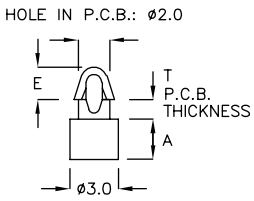

PART NO	A	T P.C.B. THICKNESS	E	PACKAGE
PCR-2C	2.5	0.8~1.0	2.0	2000
PCR-03	3.0	0.8~1.0	2.0	
PCR-3M	3.5	0.8~1.0	2.0	
PCR-04	4.0	0.8~1.0	2.0	
PCR-4M	4.5	0.8~1.0	2.0	

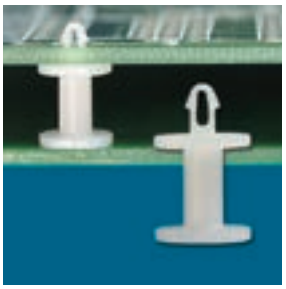

P.C. 板间隔柱 SPACER SUPPORT 3-46-2

- MATERIAL: NYLON 66(UL)
- FLAME CLASS: 94V-0/94V-2
- COLOR: NATURAL

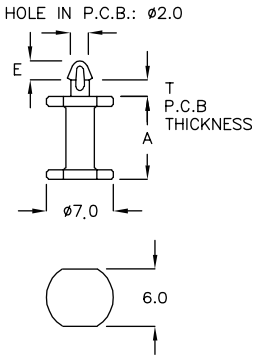

PART NO	A	T P.C.B. THICKNESS	E	PACKAGE
PCE-8MR	8.0	1.4~1.6	2.0	2000
PCE-10F	10.5	1.4~1.6	2.0	
PCE-11	11.0	1.4~1.6	2.0	

P.C. 板间隔柱 SPACER SUPPORT 3-46-3

- MATERIAL: NYLON 66(UL)
- FLAME CLASS: 94V-0/94V-2
- COLOR: NATURAL

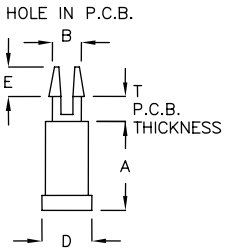

PART NO	A	B HOLE IN P.C.B.	D	E	T P.C.B. THICKNESS	PACKAGE
PCA-3	3.0	ø2.0	ø3.4	2.6	0.8~1.0	2000
PCA-3C	3.0	ø2.0	ø3.4	2.6	1.0~1.2	
PCA-4	4.0	ø1.5	ø3.0	2.0	1.4~1.6	
PCA-4A	4.0	ø2.0	ø3.5	2.0	1.4~1.6	
PCA-4C	4.7	ø2.0	ø4.8	2.6	1.4~1.6	
PCA-5	5.0	ø2.0	ø3.5	2.0	1.4~1.6	

P.C. 板间隔柱 SPACER SUPPORT 3-46-4

- MATERIAL: NYLON 66(UL)
- FLAME CLASS: 94V-0/94V-2
- COLOR: NATURAL,BLACK

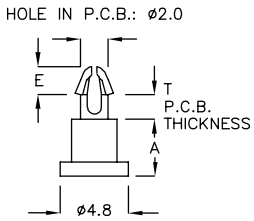

PART NO	A	T P.C.B. THICKNESS	E	PACKAGE
PCC-03	3.0	1.4~1.6	2.0	2000
PCC-04	4.0	1.4~1.6	2.0	
PCC-05	5.0	1.4~1.6	2.0	

P.C. 板间隔柱 SPACER SUPPORT 3-46-5

- MATERIAL: NYLON 66(UL)
- FLAME CLASS: 94V-0/94V-2
- COLOR: NATURAL

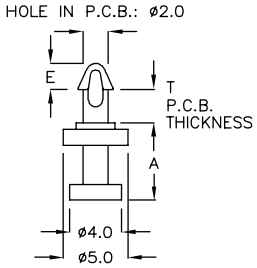

PART NO	A	T P.C.B. THICKNESS	E	PACKAGE
PCY-06	5.9	2.2~2.4	2.0	2000

返回图片索引

P.C. 板间隔柱 SPACER SUPPORT 3-47-1

- MATERIAL: NYLON 66(UL)
- FLAME CLASS: 94V-0/94V-2
- COLOR: NATURAL

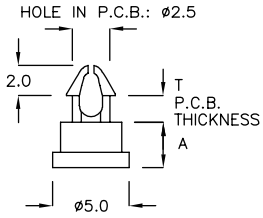

PART NO	A	T P.C.B. THICKNESS	PACKAGE
PHA-2T	2.95	1.4~1.6	2000

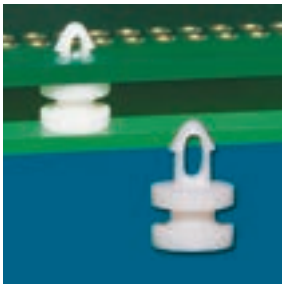

P.C. 板间隔柱 SPACER SUPPORT 3-47-2

- MATERIAL: NYLON 66(UL)
- FLAME CLASS: 94V-0/94V-2
- COLOR: NATURAL

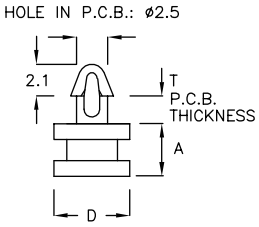

PART NO	A	D	T P.C.B. THICKNESS	PACKAGE
PCK-4C	4.1	ø5.5	1.8~2.0	2000
PCK-4G	4.0	ø4.4	0.8~1.0	

P.C. 板间隔柱 SPACER SUPPORT 3-47-3

- MATERIAL: NYLON 66(UL)
- FLAME CLASS: 94V-0/94V-2
- COLOR: NATURAL

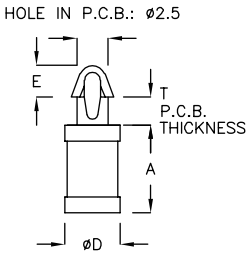

PART NO	A	D	T P.C.B. THICKNESS	E	PACKAGE
PCK-1MF	1.6	3.5	0.8~1.0	2.0	2000
PCK-2M	2.5	3.5	0.8~1.0	2.0	
PCK-3M	3.5	4.4	0.8~1.0	2.0	
PCK-4M	4.5	4.4	0.8~1.0	2.0	
PCK-05	5.0	4.4	0.8~1.0	2.0	
PCK-5A	5.6	4.4	0.8~1.0	2.4	
PCK-7A	7.0	4.4	1.4~1.6	2.4	
PCK-7C	7.5	4.4	0.8~1.0	2.3	
PCK-8A	8.0	4.4	1.4~1.6	2.2	
PCK-9A	8.9	4.4	1.4~1.6	2.2	

P.C. 板间隔柱 SPACER SUPPORT 3-47-4

- MATERIAL: NYLON 66(UL)
- FLAME CLASS: 94V-0/94V-2
- COLOR: NATURAL

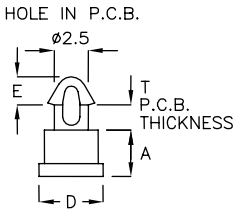

PART NO	A	D	T CHASSIS THICKNESS	E	PACKAGE
PCK-1TF	1.5	ø4.5	0.8~1.0	2.0	2000
PCK-1A	1.5	ø4.5	1.4~1.6	2.1	
PCK-2A	2.5	ø4.5	1.4~1.6	2.0	
PCK-2C	2.7	ø6.0	1.4~1.6	2.2	
PCK-2D	2.8	ø5.0	1.4~1.6	2.0	
PCK-2F	2.8	ø5.0	1.5~1.7	2.0	
PCK-2J	2.95	ø5.0	1.4~1.6	2.0	
PCK-3A	3.5	ø4.5	1.4~1.6	2.0	
PCK-04	4.0	ø4.5	1.4~1.6	1.8	
PCK-4A	4.5	ø4.5	1.4~1.6	2.0	
PCK-4F	4.0	ø5.0	1.4~1.6	2.0	
PCK-5K	5.0	ø3.6	1.9~2.1	2.0	
PCK-5RH	5.0	ø4.5	1.4~1.6	1.6	
PCK-06	6.0	ø4.5	1.6~1.8	1.5	

返回图片索引

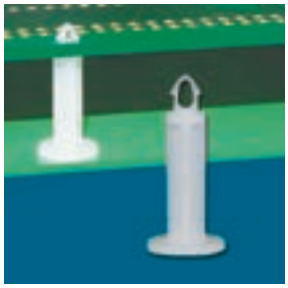

P.C. 板间隔柱 SPACER SUPPORT 3-48-1

- MATERIAL: NYLON 66(UL)
- FLAME CLASS: 94V-0/94V-2
- COLOR: NATURAL

PART NO	A	T P.C.B. THICKNESS	PACKAGE
PCK-14	14.0	1.4~1.6	2000
PCK-15	15.0	1.4~1.6	

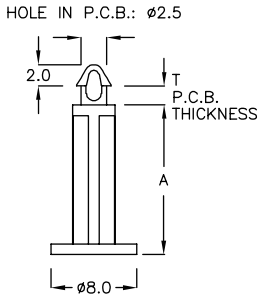

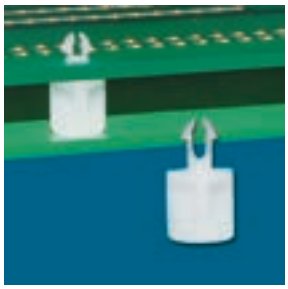

P.C. 板间隔柱 SPACER SUPPORT 3-48-2

- MATERIAL: NYLON 66(UL)
- FLAME CLASS: 94V-0/94V-2
- COLOR: NATURAL

PART NO	A	T P.C.B. THICKNESS	PACKAGE
PCK-6C	6.5	2.2~2.45	2000

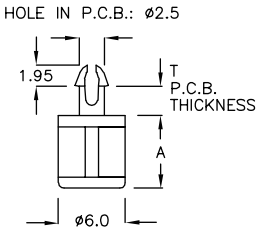

P.C. 板间隔柱 SPACER SUPPORT 3-48-3

- MATERIAL: NYLON 66(UL)
- FLAME CLASS: 94V-0/94V-2
- COLOR: NATURAL

PART NO	A	T P.C.B. THICKNESS	PACKAGE
PCS-2A	3.1	3.3~3.5	2000

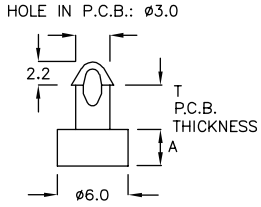

P.C. 板间隔柱 SPACER SUPPORT 3-48-4

- MATERIAL: NYLON 66(UL)
- FLAME CLASS: 94V-0/94V-2
- COLOR: NATURAL

PART NO	A	T P.C.B. THICKNESS	E	PACKAGE
PCJ-3S	2.9	2.6~2.85	2.0	2000
PCJ-3T	3.5	2.3~2.5	2.0	
PCJ-3M	3.5	3.3~3.5	2.1	
PCJ-4A	3.85	3.4~3.65	2.2	
PCJ-4M	4.5	2.3~2.5	2.1	

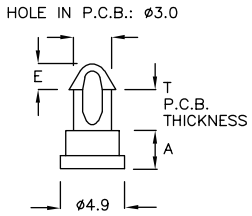

P.C. 板间隔柱 SPACER SUPPORT 3-48-5

- MATERIAL: NYLON 66(UL)
- FLAME CLASS: 94V-0/94V-2
- COLOR: NATURAL

PART NO	A	T P.C.B. THICKNESS	E	PACKAGE
PCJ-9FQ	9.5	0.8~1.0	2.0	2000
PCJ-33A	33.7	1.4~1.6	2.1	500

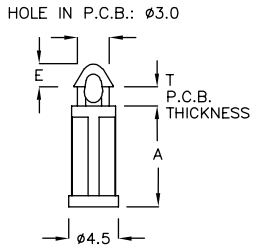

返回图片索引

P.C. 板间隔柱 SPACER SUPPORT 3-49-1

- MATERIAL: NYLON 66(UL)
- FLAME CLASS: 94V-0/94V-2
- COLOR: NATURAL

PART NO	A	T P.C.B. THICKNESS	E	PACKAGE
DCBS−2	2.0	1.2~1.7	3.8	2000
DCBS−2A	2.5	1.2~1.7	3.8	
DCBS−3	3.0	1.2~1.7	3.7	
DCBS−3A	3.3	1.2~1.7	3.7	
DCBS−3M	3.5	1.2~1.7	3.7	

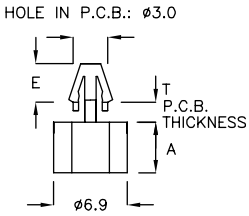

P.C. 板间隔柱 SPACER SUPPORT 3-49-2

- MATERIAL: NYLON 66(UL)
- FLAME CLASS: 94V-0/94V-2
- COLOR: NATURAL

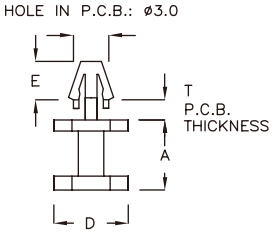

FORM.1

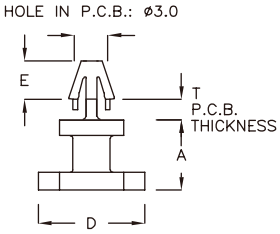

FORM.2

PART NO	A	D	T P.C.B. THICKNESS	E	FORM	PACKAGE
DCBS−4	4.0	ø7.0	1.2~1.6	3.8	1	2000
DCBS−4C	4.0	ø6.0	1.2~1.6	3.7	1	
DCBS−4M	4.5	ø7.0	1.2~1.6	3.8	1	
DCBS−5	5.0	ø7.0	1.2~1.6	3.8	1	
DCBS−5M	5.5	ø7.0	1.2~1.6	3.8	1	
DCBS−6	6.0	ø7.0	1.2~1.6	3.8	1	
DCBS−7	7.0	ø7.0	1.2~1.6	3.7	1	
DCBS−8	8.0	ø7.0	1.2~1.6	3.8	1	
DCBS−8A	8.0	ø6.8	1.2~1.6	4.3	1	
DCBS−8C	8.0	ø7.0	2.0~2.2	3.3	1	
DCBS−8M	8.5	ø7.0	1.2~1.6	3.7	1	
DCBS−9	9.0	ø7.0	1.2~1.6	3.8	1	
DCBS−10	10.0	ø7.0	1.2~1.6	3.8	1	
DCBS−10A	10.5	ø7.0	1.2~1.6	3.9	1	
DCBS−11	11.0	ø7.0	1.2~1.6	3.8	1	
DCBS−12	12.0	ø7.0	1.2~1.6	3.8	1	1000
DCBS−13	13.0	ø7.0	1.2~1.6	3.8	1	
DCBS−14	14.0	ø4.8	1.2~1.6	3.8	1	
DCBS−15	15.0	ø7.0	1.2~1.6	3.8	1	
DCBS−16KH	16.0	ø10.0	1.2~1.6	3.7	2	

P.C. 板间隔柱 SPACER SUPPORT 3-49-3

- MATERIAL: NYLON 66(UL)
- FLAME CLASS:94V-0/94V-2
- COLOR: NATURAL

PART NO	A	T P.C.B. THICKNESS	E	PACKAGE
DCBS−6A	6.5	1.4~1.6	2.5	2000

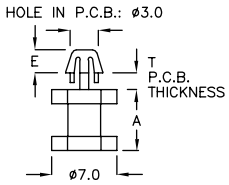

返回图片索引

P.C. 板间隔柱 SPACER SUPPORT 3-50-1

- MATERIAL: NYLON 66(UL)
- FLAME CLASS: 94V-0/94V-2
- COLOR: NATURAL

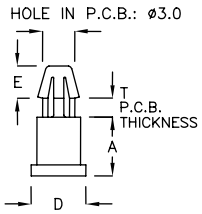

PART NO	A	T P.C.B. THICKNESS	E	D	PACKAGE
PCF-2A	2.5	1.4~1.6	2.95	ø5.0	2000
PCF-2C	2.8	1.4~1.6	2.95	ø5.0	
PCF-03	3.0	1.4~1.6	3.1	ø5.0	
PCF-3A	3.2	1.4~1.6	3.1	ø5.0	
PCF-3C	3.0	1.4~1.6	2.95	ø6.0	
PCF-3M	3.5	1.4~1.6	3.0	ø5.0	
PCF-04	4.0	1.4~1.6	3.0	ø5.0	
PCF-4A	4.5	1.4~1.6	2.95	ø5.0	
PCF-05	5.0	1.4~1.6	3.0	ø5.0	
PCF-5A	5.0	1.4~1.6	3.1	ø9.0	
PCF-09	9.0	1.4~1.6	2.95	ø5.0	
PCF-9FK	9.4	1.4~1.6	2.9	ø6.0	

P.C. 板间隔柱 SPACER SUPPORT 3-50-2

- MATERIAL: NYLON 66(UL)
- FLAME CLASS: 94V-0/94V-2
- COLOR: NATURAL

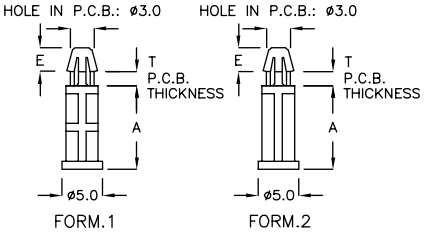

PART NO	A	T P.C.B. THICKNESS	E	FORM	PACKAGE
PCF-9A	9.5	1.6	2.7	2	2000
PCF-10	10.0	1.6	2.7	1	
PCF-20	20.0	1.6	2.7	1	1000
PCF-22	22.0	1.6	2.9	1	
PCF-25	25.0	1.6	2.9	1	

P.C. 板间隔柱 SPACER SUPPORT 3-50-3

- MATERIAL: NYLON 66(UL)
- FLAME CLASS: 94V-0/94V-2
- COLOR: NATURAL

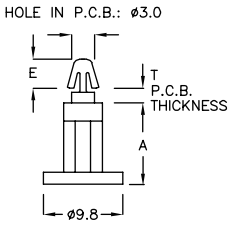

PART NO	A	T P.C.B. THICKNESS	E	PACKAGE
TCF-4A	4.5	1.6~1.7	3.6	2000
TCF-10	10.0	1.6~1.7	3.8	1000

P.C. 板间隔柱 SPACER SUPPORT 3-50-4

- MATERIAL: NYLON 66(UL)
- FLAME CLASS: 94V-0/94V-2
- COLOR: NATURAL

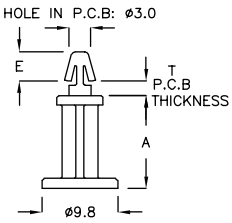

PART NO	A	T P.C.B THICKNESS	E	PACKAGE
TAX-12D	12.0	1.55~1.65	3.8	1000

返回图片索引

P.C. 板间隔柱 SPACER SUPPORT 3-51-1

- MATERIAL: NYLON 66(UL)
- FLAME CLASS: 94V-0/94V-2
- COLOR: NATURAL

PART NO	A	T P.C.B. THICKNESS	E	PACKAGE
TCW-12A	12.7	0.6	2.3	1000

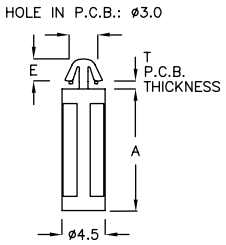

P.C. 板间隔柱 SPACER SUPPORT 3-51-2

- MATERIAL: NYLON 66(UL)
- FLAME CLASS: 94V-0/94V-2
- COLOR: NATURAL

PART NO	A	T P.C.B. THICKNESS	E	PACKAGE
PCN-04	4.0	1.0~1.2	2.95	2000

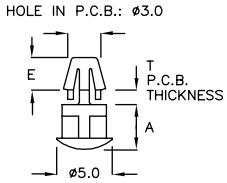

P.C. 板间隔柱 SPACER SUPPORT 3-51-3

- MATERIAL: NYLON 66(UL)
- FLAME CLASS: 94V-0/94V-2
- COLOR: NATURAL

PART NO	A	T P.C.B. THICKNESS	E	PACKAGE
MFR-15	15.0	1.2~1.6	3.5	1000

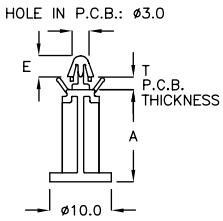

P.C. 板间隔柱 SPACER SUPPORT 3-51-4

- MATERIAL: NYLON 66(UL)
- FLAME CLASS: 94V-0/94V-2
- COLOR: NATURAL

PART NO	A	T P.C.B THICKNESS	E	PACKAGE
MFD-12	12.0	1.2~1.6	3.0	1000

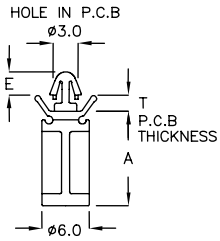

P.C. 板间隔柱 SPACER SUPPORT 3-51-5

- MATERIAL: NYLON 66(UL)
- FLAME CLASS: 94V-0/94V-2
- COLOR: BLACK

PART NO	A	T CHASSIS THICKNESS	E	PACKAGE
MFRK-11A	11.0	1.4~1.6	2.0	1000

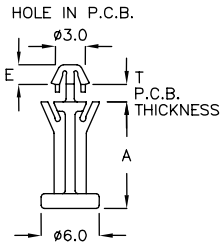

返回图片索引

P.C. 板间隔柱 SPACER SUPPORT 3-52-1

- MATERIAL: NYLON 66(UL)
- FLAME CLASS: 94V-0/94V-2
- COLOR: NATURAL

PART NO	A	T P.C.B. THICKNESS	E	PACKAGE
MFC-37KS	37.5	1.4~1.6	2.7	500
MFC-38C	38.4	1.2~1.6	2.7	

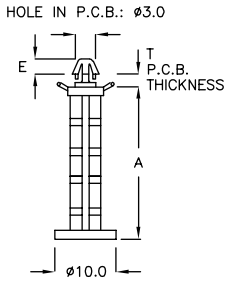

P.C. 板间隔柱 SPACER SUPPORT 3-52-2

- MATERIAL: NYLON 66(UL)
- FLAME CLASS: 94V-0/94V-2
- COLOR: NATURAL
- USE M2x2 TAPPING SCREW

PART NO	A	T P.C.B. THICKNESS	E	PACKAGE
SDF-2C	2.15	1.6	2	2000
		2.6		

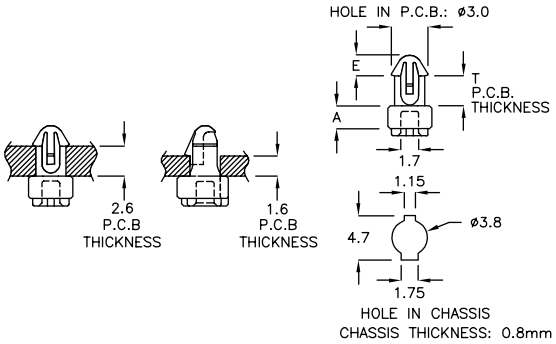

P.C. 板间隔柱 SPACER SUPPORT 3-52-3

- MATERIAL: NYLON 66(UL)
- FLAME CLASS: 94V-0/94V-2
- COLOR: NATURAL

PART NO	A	T P.C.B. THICKNESS	E	PACKAGE
TCQ-03	3.0	1.4~1.6	4.8	1000

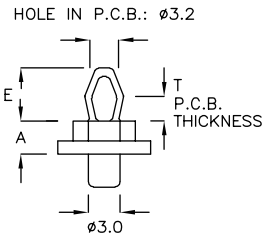

P.C. 板间隔柱 SPACER SUPPORT 3-52-4

- MATERIAL: NYLON 66(UL)
- FLAME CLASS: 94V-0/94V-2
- COLOR: NATURAL
- USE M2 TAPPING SCREW

PART NO	A	T P.C.B. THICKNESS	E	PACKAGE
TAK-6A	6.6	1.0~1.2	3.5	2000

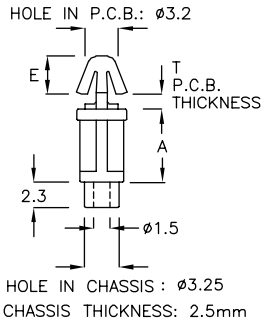

P.C. 板间隔柱 SPACER SUPPORT 3-52-5

- MATERIAL: NYLON 66(UL)
- FLAME CLASS: 94V-0/94V-2
- COLOR: NATURAL

PART NO	A	T P.C.B. THICKNESS	E	PACKAGE
TCH-14A	14.5	1.4~1.6	2.7	1000

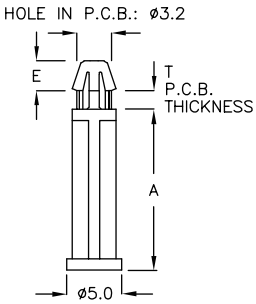

返回图片索引

P.C. 板间隔柱 SPACER SUPPORT 3-53-1

- MATERIAL: NYLON 66(UL)
- FLAME CLASS: 94V-0/94V-2
- COLOR: NATURAL

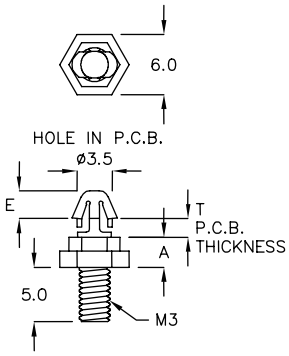

PART NO	A	E	T P.C.B. THICKNESS	PACKAGE
SDC-3TH	3.0	2.75	1.2~1.6	2000

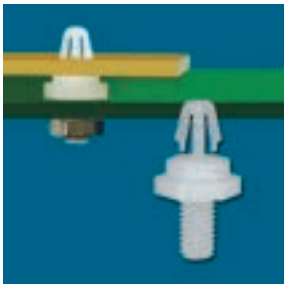

P.C. 板间隔柱 SPACER SUPPORT 3-53-2

- MATERIAL: NYLON 66(UL)
- FLAME CLASS: 94V-0/94V-2
- COLOR: NATURAL

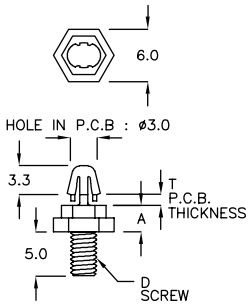

PART NO	A	T P.C.B. THICKNESS	D	PACKAGE
SDM-03	3.0	0.8~1.0	M3	2000
SDM-04	4.0	0.8~1.0	M2.5	

P.C. 板间隔柱 SPACER SUPPORT 3-53-3

- MATERIAL: NYLON 66(UL)
- FLAME CLASS: 94V-0/94V-2
- COLOR: NATURAL

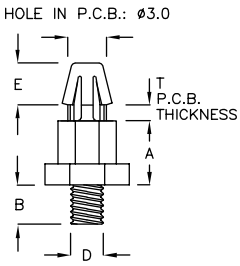

PART NO	A	B	T P.C.B. THICKNESS	D SCREW	E	PACKAGE
SDS-05	4.9	3.0	0.8~1.0	M2.5	3.3	2000
SDS-05A	4.9	3.0	0.8~1.0	M4	3.3	
SDS-3A	3.4	4.0	0.8~1.0	M4	3.5	

P.C. 板间隔柱 SPACER SUPPORT 3-53-4

- MATERIAL: NYLON 66(UL)
- FLAME CLASS: 94V-0/94V-2
- COLOR: BLACK

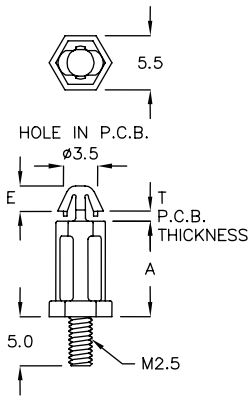

PART NO	A	E	T P.C.B. THICKNESS	PACKAGE
SDN-9AG	9.7	2.6	0.6~0.8	1000

返回图片索引

P.C. 板间隔柱 SPACER SUPPORT 3-54-1

- MATERIAL: NYLON 66(UL)
- FLAME CLASS: 94V-0/94V-2
- COLOR: NATURAL

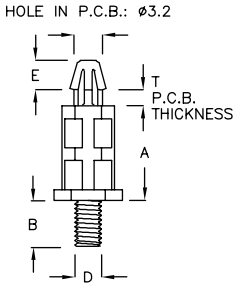

PART NO	A	B	T P.C.B. THICKNESS	D SCREW	E	PACKAGE
SDT−10A	10.4	5.0	1.4 ~ 1.6	M3	3.25	2000

P.C. 板间隔柱 SPACER SUPPORT 3-54-2

- MATERIAL: NYLON 66(UL)
- FLAME CLASS: 94V-0/94V-2
- COLOR: NATURAL

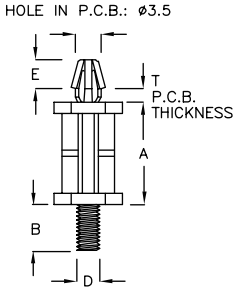

PART NO	A	B	T P.C.B. THICKNESS	D SCREW	E	PACKAGE
SSA−13A	13.0	6.0	1.4 ~ 1.6	M3	3.9	500

P.C. 板间隔柱 SPACER SUPPORT 3-54-3

- MATERIAL: NYLON 66(UL)
- FLAME CLASS: 94V-0/94V-2
- COLOR: NATURAL

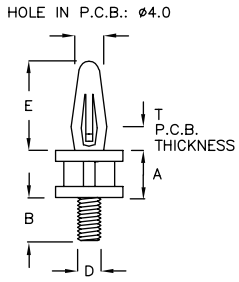

PART NO	A	B	T P.C.B. THICKNESS	D SCREW	E	PACKAGE
SSBS−6	6.2	7.6	1.0~1.7	#6−32	10.6	1000
SSBS−6M	6.35	5.0	1.0~1.7	#6−32	10.6	
SSBS−10	9.6	7.5	1.0~1.7	#6−32	10.6	
SSBS−12A	12.5	5.0	1.0~1.7	#6−32	10.1	500
SSBS4−6	6.3	5.0	1.0~1.7	M4	10.6	
SSBS4−10	10.0	7.4	1.0~1.7	M4	10.6	
SSBS4−16	15.8	7.4	1.0~1.7	M4	10.6	

P.C. 板间隔柱 SPACER SUPPORT 3-54-4

- MATERIAL: NYLON 66(UL)
- FLAME CLASS: 94V-0/94V-2
- COLOR: NATURAL

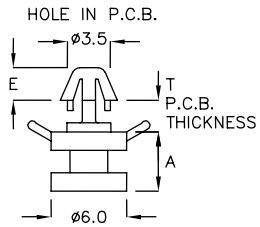

PART NO	A	E	T P.C.B. THICKNESS	PACKAGE
MF−04A	4.55	2.5	1.6~2.0	2000

返回图片索引

P.C. 板间隔柱 SPACER SUPPORT 3-55-1

- MATERIAL: NYLON 66(UL)
- FLAME CLASS: 94V-0/94V-2
- COLOR: NATURAL

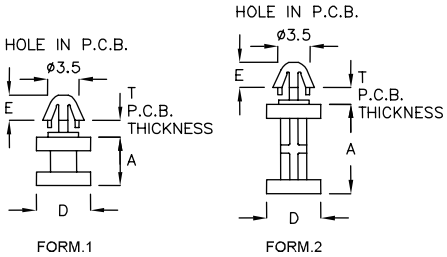

PART NO	A	D	E	T P.C.B. THICKNESS	FORM	PACKAGE
MF-003	3.0	ø6.0	3.0	1.3~1.6	1	2000
MF-03M	3.5	ø6.0	2.8	1.3~1.6	1	
MF-004	4.0	ø6.0	3.0	1.3~1.6	1	
MF-005	5.0	ø6.0	3.0	1.3~1.6	1	
MF-05M	5.5	ø6.0	2.8	1.3~1.6	1	
MF-08	8.0	ø6.0	2.8	1.3~1.6	1	
MF-10	10.0	ø3.5	3.0	0.8~1.0	1	
MF-10AD	10.0	ø6.0	2.85	1.2~1.4	1	
MF-10FH	10.0	ø6.0	2.8	1.3~1.6	1	
MF-13	13.0	ø6.0	2.9	1.0~1.2	2	1000
MF-19	19.0	ø6.0	2.9	1.0~1.2	2	500

P.C. 板间隔柱 SPACER SUPPORT 3-55-2

- MATERIAL: NYLON 66(UL)
- FLAME CLASS: 94V-0/94V-2
- COLOR: NATURAL

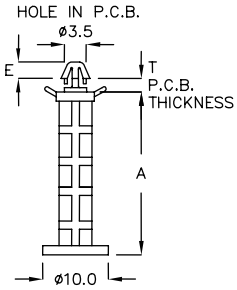

PART NO	A	E	T P.C.B. THICKNESS	PACKAGE
MF-26C	26.0	2.5	1.4~1.6	500
MF-36	35.95	2.5	1.4~1.6	
MF-38A	38.35	2.5	1.4~1.6	

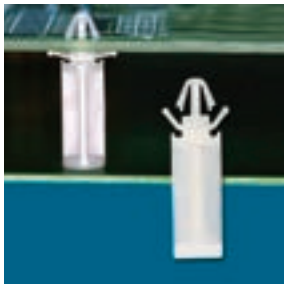

P.C. 板间隔柱 SPACER SUPPORT 3-55-3

- MATERIAL: NYLON 66(UL)
- FLAME CLASS: 94V-0/94V-2
- COLOR: NATURAL

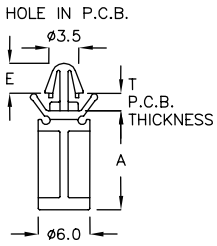

PART NO	A	E	T P.C.B. THICKNESS	PACKAGE
MFQ-4A	4.5	3.5	1.2~1.6	1000
MFQ-07	7.0	3.5	1.2~1.6	
MFQ-12	12.0	3.5	1.2~1.6	
MFQ-15	15.0	3.5	1.2~1.6	
MFQ-16	16.0	3.5	1.2~1.6	

P.C. 板间隔柱 SPACER SUPPORT 3-55-4

- MATERIAL: NYLON 66(UL)
- FLAME CLASS: 94V-0/94V-2
- COLOR: NATURAL

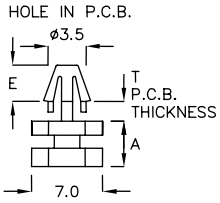

PART NO	A	E	T P.C.B. THICKNESS	PACKAGE
DCMS-4M	4.5	3.6	1.4~1.7	2000
DCMS-6	6.35	3.6	1.4~1.7	
DCMS-11SF	11.0	3.0	1.0~1.4	

返回图片索引

P.C. 板间隔柱 SPACER SUPPORT 3-56-1

- MATERIAL: NYLON 66(UL)
- FLAME CLASS: 94V-0/94V-2
- COLOR: NATURAL

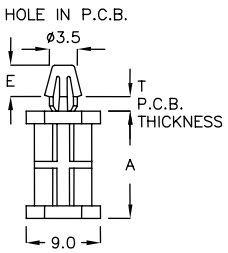

PART NO	A	E	T P.C.B. THICKNESS	PACKAGE
TCD-13	13.0	3.85	1.4~1.6	500

P.C. 板间隔柱 SPACER SUPPORT 3-56-2

- MATERIAL: NYLON 66(UL)
- FLAME CLASS: 94V-0/94V-2
- COLOR: NATURAL

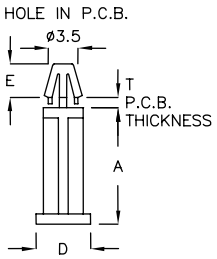

PART NO	A	D	E	T P.C.B. THICKNESS	PACKAGE
TCC-13A	13.5	ø9.0	5.0	1.4~1.6	1000
TCC-14	14.5	ø6.0	4.0	1.4~1.6	
TCC-14A	14.5	ø6.0	2.7	1.4~1.6	
TCC-21SD	21.0	ø8.0	2.8	1.0~1.2	500
TCC-22	22.0	ø5.0	2.9	1.4~1.6	

P.C. 板间隔柱 SPACER SUPPORT 3-56-3

- MATERIAL: NYLON 66(UL)
- FLAME CLASS: 94V-0/94V-2
- COLOR: NATURAL

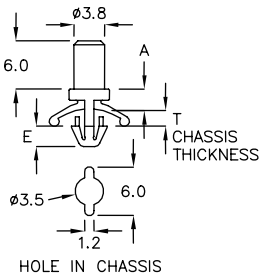

PART NO	A	E	T CHASSIS THICKNESS	PACKAGE
LCG-2K	2.65	2.5	0.6	1000

P.C. 板间隔柱 SPACER SUPPORT 3-56-4

- MATERIAL：NYLON 66(UL)
- FLAME CLASS：94V-0/94V-2
- COLOR：NATURAL

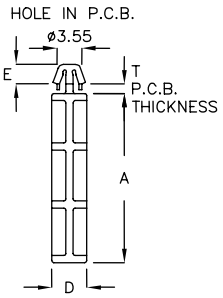

PART NO	A	D	E	T P.C.B. THICKNESS	PACKAGE
MQB-25M	25.5	ø5.0	2.8	1.0~1.2	500
MQB-28F	28.5	ø5.0	2.8	1.0~1.2	

P.C. 板间隔柱 SPACER SUPPORT 3-56-5

- MATERIAL: NYLON 66(UL)
- FLAME CLASS: 94V-0/94V-2
- COLOR: NATURAL

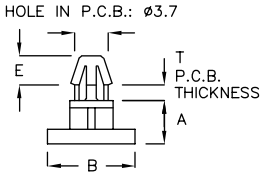

PART NO	A	B	T P.C.B. THICKNESS	E	PACKAGE
PCQ-03	3.0	ø5.5	1.4~1.6	3.2	2000
PCQ-4A	4.3	ø9.5	1.4~1.6	3.2	

返回图片索引

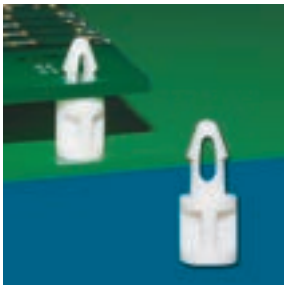

P.C. 板间隔柱 SPACER SUPPORT 3-57-1

- MATERIAL: NYLON 66(UL)
- FLAME CLASS: 94V-0/94V-2
- COLOR: NATURAL

PART NO	A	T P.C.B. THICKNESS	E	PACKAGE
PCM−07	7.0	3.2～3.4	4.0	2000

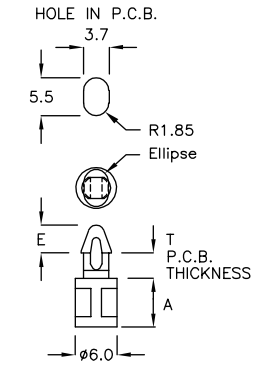

P.C. 板间隔柱 SPACER SUPPORT 3-57-2

- MATERIAL: NYLON 66(UL)
- FLAME CLASS: 94V-0/94V-2
- COLOR: NATURAL

PART NO	A	T P.C.B. THICKNESS	E	PACKAGE
MCC−17S	16.6	1.4～1.6	2.0	1000

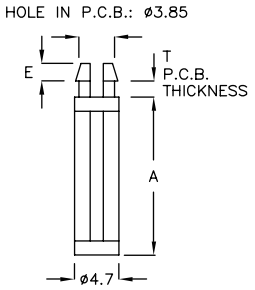

P.C. 板间隔柱 SPACER SUPPORT 3-57-3

- MATERIAL: NYLON 66(UL)
- FLAME CLASS: 94V-0/94V-2
- COLOR: NATURAL

PART NO	A	T P.C.B. THICKNESS	E	PACKAGE
TCS−15	15.0	1.4～1.6	2.0	1000

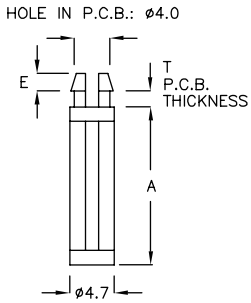

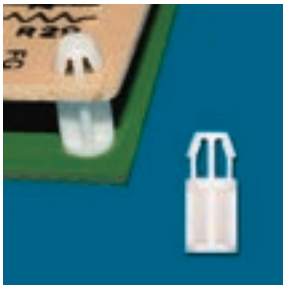

P.C. 板间隔柱 SPACER SUPPORT 3-57-4

- MATERIAL: NYLON 66(UL)
- FLAME CLASS: 94V-0/94V-2
- COLOR: NATURAL

PART NO	A	T P.C.B. THICKNESS	PACKAGE
TCN−07	7.0	1.2～1.6	2000

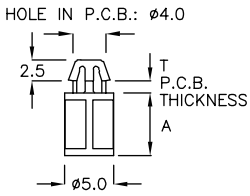

P.C. 板间隔柱 SPACER SUPPORT 3-57-5

- MATERIAL: NYLON 66(UL)
- FLAME CLASS: 94V-0/94V-2
- COLOR: NATURAL

PART NO	A	T P.C.B. THICKNESS	C	E	PACKAGE
TCK−15	15.5	1.2～1.4	10.9	5.0	1000
TCK−17	17.5	1.2～1.4	10.9	5.0	500
TCK−21A	21.5	1.2～1.6	8.0	3.0	

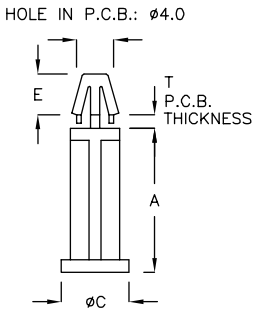

返回图片索引

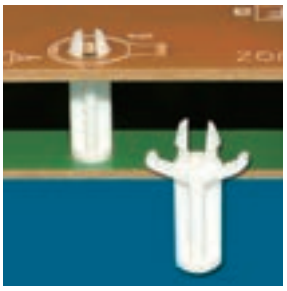

P.C. 板间隔柱 SPACER SUPPORT 3-58-1

- MATERIAL: NYLON 66(UL)
- FLAME CLASS: 94V-0/94V-2
- COLOR: NATURAL

PART NO	A	T P.C.B. THICKNESS	PACKAGE
TCJ−11	11.0	1.2~1.6	1000
TCJ−12A	12.2	1.2~1.6	
TCJ−15	15.0	1.2~1.6	
TCJ−18	18.0	1.2~1.6	

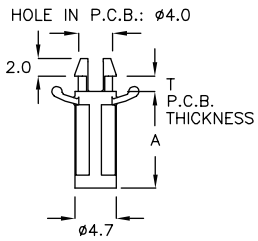

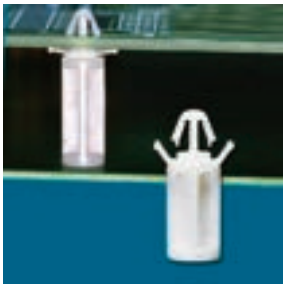

P.C. 板间隔柱 SPACER SUPPORT 3-58-2

- MATERIAL: NYLON 66(UL)
- FLAME CLASS: 94V-0/94V-2
- COLOR: NATURAL

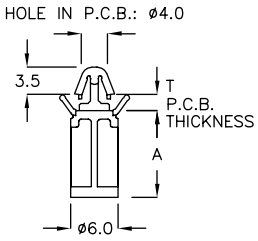

PART NO	A	T P.C.B. THICKNESS	PACKAGE
MFS−11	11.0	1.2~1.6	1000

P.C. 板间隔柱 SPACER SUPPORT 3-58-3

- MATERIAL: NYLON 66(UL)
- FLAME CLASS: 94V-0/94V-2
- COLOR: NATURAL

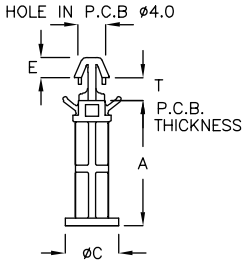

PART NO	A	T P.C.B. THICKNESS	C	E	PACKAGE
TCX−12	12.0	1.6～2.0	ø4.7	3.0	1000
TCX−19H	19.6	2.6～3.0	ø8.0	3.0	
TCX−21	21.0	1.4～1.8	ø8.0	3.0	500

P.C. 板间隔柱 SPACER SUPPORT 3-58-4

- MATERIAL: NYLON 66(UL)
- FLAME CLASS: 94V-0/94V-2
- COLOR: NATURAL

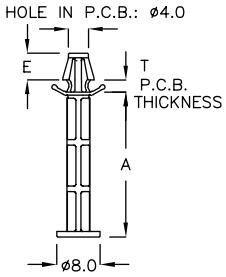

PART NO	A	T P.C.B. THICKNESS	E	PACKAGE
TAN−29F	29.4	1.4~1.6	4.9	500

返回图片索引

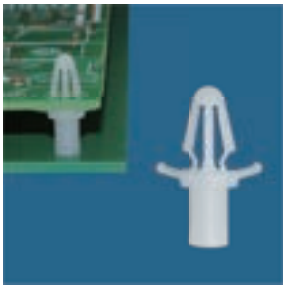

P.C. 板间隔柱 SPACER SUPPORT 3-59-1

- MATERIAL: NYLON 66(UL)
- FLAME CLASS: 94V-0/94V-2
- COLOR: NATURAL

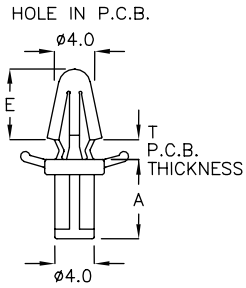

PART NO	A	E	T CHASSIS THICKNESS	PACKAGE
TCBR-8KF	8.0	7.1	1.6~1.7	1000

P.C. 板间隔柱 SPACER SUPPORT 3-59-2

- MATERIAL：NYLON 66(UL)
- FLAME CLASS：94V-0/94V-2
- COLOR：NATURAL

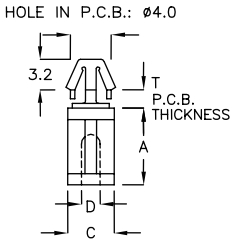

PART NO	A	T P.C.B. THICKNESS	C	D TAPPING SCREW	PACKAGE
MC-5	5.0	1.2~1.7	ø4.95	M2.5	2000
MC-6	6.35	1.2~1.7	ø4.9	M2.5	
MC-10	9.7	1.2~1.7	ø5.8	M2.5	1000
MC-12	12.7	1.2~1.7	ø5.8	M2.5	

P.C. 板间隔柱 SPACER SUPPORT 3-59-3

- MATERIAL：NYLON 66(UL)
- FLAME CLASS：94V-0/94V-2
- COLOR：NATURAL

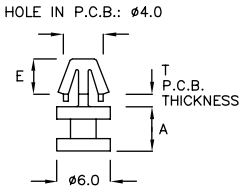

PART NO	A	T P.C.B. THICKNESS	E	PACKAGE
MC-3M	3.5	0.9~1.1	3.2	2000
MC-4M	4.5	0.9~1.1	3.2	
MC-05C	5.0	0.9~1.1	4.0	
MC-5M	5.5	0.9~1.1	3.2	
MC-6F	6.0	0.9~1.1	3.2	

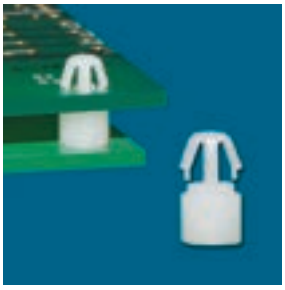

P.C. 板间隔柱 SPACER SUPPORT 3-59-4

- MATERIAL：NYLON 66(UL)
- FLAME CLASS：94V-0/94V-2
- COLOR：NATURAL

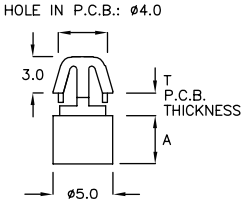

PART NO	A	T P.C.B. THICKNESS	PACKAGE
MC-04F	4.0	1.2~1.6	2000

返回图片索引

P.C. 板间隔柱 SPACER SUPPORT 3-60-1

- MATERIAL: NYLON 66(UL)
- FLAME CLASS: 94V-0/94V-2
- COLOR: NATURAL

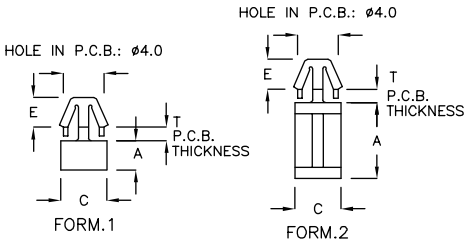

PART NO	A	T P.C.B. THICKNESS	C	E	FORM	PACKAGE
MC-1AK	1.5	0.6~0.8	ø5.0	3.0	1	2000
MC-002	2.0	0.6~0.8	ø5.0	3.6	1	
MC-02A	2.0	0.7~0.8	ø4.8	2.5	1	
MC-02C	2.0	0.9~1.2	ø5.0	3.8	1	
MC-2DP	2.0	0.85~1.15	ø6.8	2.2	1	
MC-2M	2.5	1.2~1.6	ø5.0	3.6	1	
MC-2NJ	2.0	0.85~1.0	ø5.0	2.2	1	
MC-2P	2.3	1.2~1.6	ø5.0	3.5	1	
MC-3	3.0	1.2~1.7	ø5.1	3.4	2	2000
MC-3A	3.0	1.6~2.0	ø7.0	2.9	2	
MC-3K	3.5	1.2~1.6	ø5.0	3.5	2	
MC-3QS	3.2	1.2~1.6	ø5.0	3.5	2	
MC-4	4.0	1.2~1.7	ø5.2	3.4	2	
MC-4KP	4.0	1.6~1.8	ø7.0	2.9	2	
MC-04D	4.5	1.2~1.7	ø5.0	3.3	2	
MC-5B	5.0	0.8~1.0	ø5.1	3.4	2	
MC-06A	6.5	1.2~1.7	ø5.0	3.3	2	
MC-07M	7.5	1.2~1.7	ø5.0	3.3	2	
MC-8	8.0	1.2~1.7	ø4.9	3.6	2	
MC-8A	8.5	1.2~1.6	ø5.1	3.3	2	
MC-09	9.0	1.2~1.6	ø5.1	3.3	2	
MC-10A	10.0	1.2~1.6	ø5.1	3.3	2	1000
MC-14	14.0	1.2~1.6	ø5.1	3.5	2	
MC-14C	14.5	1.2~1.6	ø5.1	3.0	2	
MC-15C	15.9	1.2~1.6	ø5.1	3.0	2	
MC-35	35.0	1.2~1.6	ø5.1	3.3	2	500

P.C. 板间隔柱 SPACER SUPPORT 3-60-2

- MATERIAL: NYLON 66(UL)
- FLAME CLASS: 94V-0/94V-2
- COLOR: NATURAL

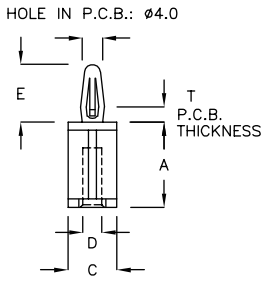

PART NO	A	T P.C.B. THICKNESS	C	SCREW & THICKNESS		E	PACKAGE
				D TAPPING SCREW	SUITABLE THICKNESS		
BCBS-6	6.35	1.2~1.7	9.0	M3.5X6	1.0	10.7	500
BCBS-8	8.0	1.2~1.7	8.9	M3.5X6	1.0	10.6	
BCBS-10	10.0	1.2~1.7	9.0	M3.5X6	1.0	10.1	
BCBS-12	12.7	1.2~1.7	8.9	M3.5X6	1.0	10.6	
BCBS-14	14.0	1.2~1.7	9.2	M3.5X6	1.0	10.2	
BCBS-15	15.9	1.2~1.7	9.1	M3.5X6	1.0	10.1	
BCBS-29A	29.0	1.2~1.7	9.2	M3.5X6	1.0	10.4	
BCBS-29	29.4	1.2~1.7	9.2	M3X6	1.0	10.4	

返回图片索引

P.C. 板间隔柱 SPACER SUPPORT 3-61-1

- MATERIAL: NYLON 66(UL)
- FLAME CLASS: 94V-0/94V-2
- COLOR: NATURAL

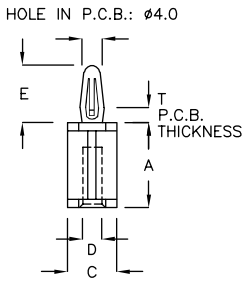

PART NO	A	T P.C.B. THICKNESS	C	SCREW & THICKNESS		E	PACKAGE
				D TAPPING SCREW	SUITABLE THICKNESS		
BCMS-6	6.35	1.2~1.7	9.0	M3X6	1.0	10.7	500
BCMS-6AD	6.0	1.2~1.7	8.6	M3X5	1.0	10.2	
BCMS-8	8.0	1.2~1.7	8.9	M3X6	1.0	10.6	
BCMS-10	10.0	1.2~1.7	9.0	M3X6	1.0	10.1	
BCMS-12	12.7	1.2~1.7	8.9	M3X6	1.0	10.6	
BCMS-14	14.0	1.2~1.7	9.2	M3X6	1.0	10.3	

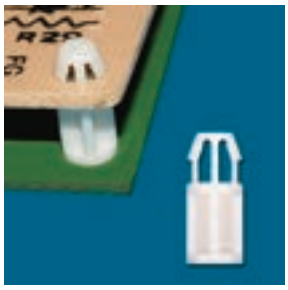

P.C. 板间隔柱 SPACER SUPPORT 3-61-2

- MATERIAL: NYLON 66(UL)
- FLAME CLASS: 94V-0/94V-2
- COLOR: NATURAL

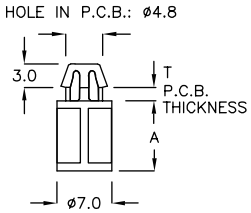

PART NO	A	T P.C.B. THICKNESS	PACKAGE
TCY-09	9.0	1.2~1.6	1000
TCY-12A	12.8	1.2~1.6	
TCY-16	16.0	1.2~1.6	
TCY-18	18.0	1.2~1.6	
TCY-22	22.0	1.2~1.6	

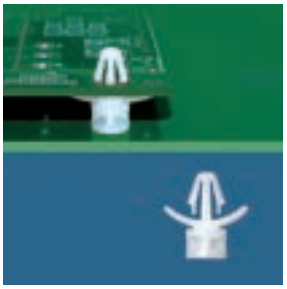

P.C. 板间隔柱 SPACER SUPPORT 3-61-3

- MATERIAL: NYLON 66(UL)
- FLAME CLASS: 94V-0/94V-2
- COLOR: NATURAL

NEW

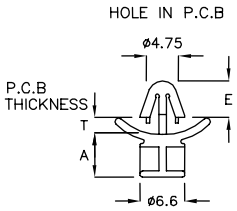

	PART NO	A	E	T P.C.B THICKNESS	PACKAGE
★	MFKA-5H	6.4	5.5	1.57	1000

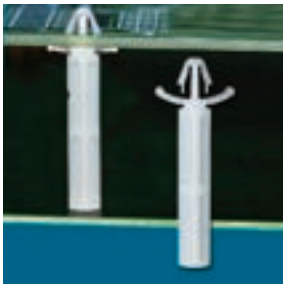

P.C. 板间隔柱 SPACER SUPPORT 3-61-4

- MATERIAL: NYLON 66(UL)
- FLAME CLASS: 94V-0/94V-2
- COLOR: NATURAL

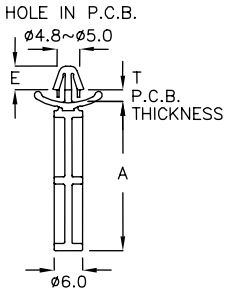

PART NO	A	T CHASSIS THICKNESS	E	PACKAGE
MFW-31A	31.35	0.8~2.0	5.0	500

P.C. 板间隔柱 SPACER SUPPORT 3-61-5

- MATERIAL: NYLON 66(UL)
- FLAME CLASS: 94V-0/94V-2
- COLOR: NATURAL

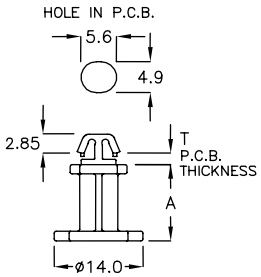

PART NO	A	T P.C.B. THICKNESS	PACKAGE
TCYA-12JM	12.0	1.6	1000

返回图片索引

P.C. 板间隔柱 SPACER SUPPORT 3-62-1

- MATERIAL: NYLON 66(UL)
- FLAME CLASS: 94V-0/94V-2
- COLOR: NATURAL

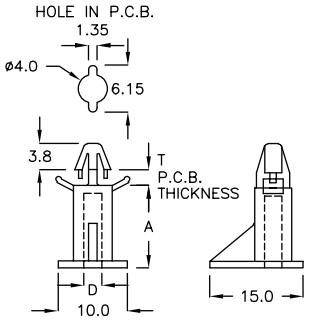

PART NO	A	T P.C.B. THICKNESS	SCREW & THICKNESS		PACKAGE
			D TAPPING SCREW	SUITABLE THICKNESS	
TAJ−12	12.0	1.2~2.1	M3X8	1.0	500

P.C. 板间隔柱 SPACER SUPPORT 3-62-2

- MATERIAL: NYLON 66(UL)
- FLAME CLASS: 94V-0/94V-2
- COLOR: NATURAL

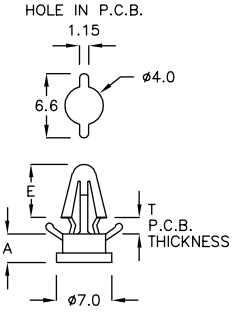

PART NO	A	T P.C.B. THICKNESS	E	PACKAGE
TCA−3F	3.6	1.5~1.8	6.8	1000

P.C. 板间隔柱 SPACER SUPPORT 3-62-3

- MATERIAL: NYLON 66(UL)
- FLAME CLASS: 94V-0/94V-2
- COLOR: NATURAL

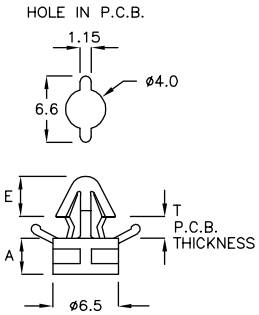

PART NO	A	T P.C.B. THICKNESS	E	PACKAGE
TCR−3A	3.6	1.2~1.7	4.0	2000

P.C. 板间隔柱 SPACER SUPPORT 3-62-4

- MATERIAL: NYLON 66(UL)
- FLAME CLASS: 94V-0/94V-2
- COLOR: NATURAL

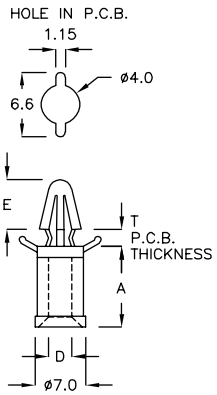

PART NO	A	T P.C.B. THICKNESS	SCREW & THICKNESS		E	PACKAGE
			D TAPPING SCREW	SUITABLE THICKNESS		
TCA−3K	3.6	1.2~1.7	M3X3	1.0	5.0	1000
TCA−4A	4.5	1.2~1.7	M3X4	1.0	6.8	500
TCA−5C	5.5	1.2~1.7	M3X5	1.0	4.0	1000
TCA−07	7.0	1.2~1.7	M3X6	1.0	6.8	
TCA−7A	7.7	1.2~1.7	M3X7	1.0	5.8	
TCA−8A	8.5	1.2~1.7	M3X7	1.0	6.8	
TCA−8C	8.5	1.2~1.7	M3X7	1.0	5.8	

返回图片索引

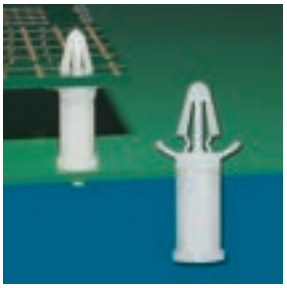

P.C. 板间隔柱 SPACER SUPPORT 3-63-1

- MATERIAL: NYLON 66(UL)
- FLAME CLASS: 94V-0/94V-2
- COLOR: NATURAL

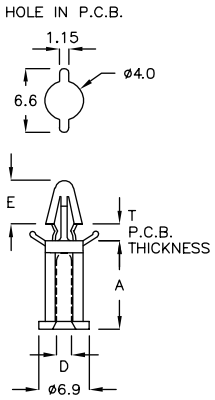

PART NO	A	T P.C.B. THICKNESS	SCREW & THICKNESS		E	PACKAGE
			D TAPPING SCREW	SUITABLE THICKNESS		
TCA−14	14.0	1.1~1.7	M3X10	1.0	7.0	500

P.C. 板间隔柱 SPACER SUPPORT 3-63-2

- MATERIAL: NYLON 66(UL)
- FLAME CLASS: 94V-0/94V-2
- COLOR: NATURAL

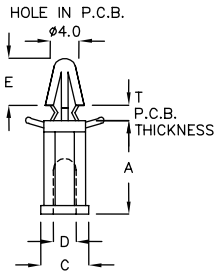

PART NO	A	C	E	T P.C.B. THICKNESS	SCREW & THICKNESS		PACKAGE
					D TAPPING SCREW	SUITABLE THICKNESS	
TCBS−5	5.0	ø6.9	7.2	1.2~1.9	M3X4.5	1.0	1000
TCBS−5A	5.5	ø6.9	7.0	1.2~1.9	M3X4.5	1.0	
TCBS−6	6.35	ø8.0	6.8	1.2~1.9	M3X5	1.0	
TCBS−7	7.0	ø7.8	6.8	1.2~1.9	M3X6	1.0	
TCBS−10	10.0	ø6.9	7.2	1.2~1.9	M3X6	1.0	
TCBS−12K	12.5	ø6.9	6.8	1.2~1.9	M3X8	1.0	
TCBS−14	14.0	ø6.8	7.1	1.2~1.9	M3X8	1.0	
TCBS−15	15.1	ø6.9	7.0	1.2~1.9	M3X10	1.0	
TCBS−18	18.0	ø6.9	6.7	1.2~1.9	M3X10	1.0	
TCBS−20	20.0	ø6.8	7.1	1.2~1.9	M3X10	1.0	
TCBS−25	25.0	ø6.9	7.1	1.2~1.9	M3X10	1.0	
TCBS−27A	27.5	ø6.9	6.8	1.2~1.9	M3X10	1.0	500
TCBS−29	29.3	ø6.9	6.8	1.2~1.9	M3X10	1.0	
TCBS−30	30.0	ø6.9	7.2	1.2~1.9	M3X10	1.0	
TCBS−35	35.0	ø6.9	6.8	1.2~1.9	M3X10	1.0	
TCBS−38	38.0	ø9.9	6.7	1.2~1.9	M3X10	1.0	
TCBS−40	40.0	ø7.0	7.0	1.2~1.9	M3X10	1.0	
TCBS−49	49.0	ø8.1	6.6	1.2~1.9	M3X10	1.0	200

P.C. 板间隔柱 SPACER SUPPORT 3-63-3

- MATERIAL: NYLON 66(UL)
- FLAME CLASS: 94V-0/94V-2
- COLOR: NATURAL

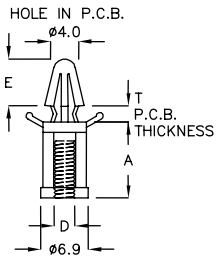

PART NO	A	E	T P.C.B. THICKNESS	SCREW & THICKNESS		PACKAGE
				D SCREW	SUITABLE THICKNESS	
TCM3−7	7.0	6.8	1.2~1.7	M3X7	1.0	1000
TCM3−8M	8.5	6.8	1.2~1.7	M3X6	1.0	
TCM3−11	11.0	6.8	1.2~1.7	M3X8	1.0	

返回图片索引

P.C. 板间隔柱 SPACER SUPPORT 3-64-1

- MATERIAL: NYLON 66(UL)
- FLAME CLASS: 94V-0/94V-2
- COLOR: NATURAL

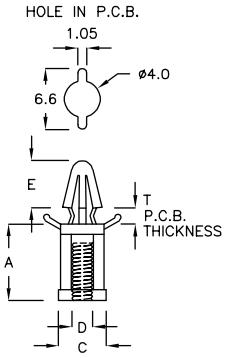

PART NO	A	T P.C.B. THICKNESS	C	SCREW & THICKNESS		E	PACKAGE
				D SCREW	SUITABLE THICKNESS		
TCM3-8MF	8.5	1.2~1.7	ø6.9	M3X7	1.0	6.9	1000

P.C. 板间隔柱 SPACER SUPPORT 3-64-2

- MATERIAL: NYLON 66(UL)
- FLAME CLASS: 94V-0/94V-2
- COLOR: NATURAL

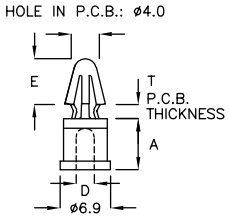

PART NO	A	T P.C.B. THICKNESS	SCREW & THICKNESS		E	PACKAGE
			D TAPPING SCREW	SUITABLE THICKNESS		
TCL-07	7.0	1.2~1.7	M3X7	1.0	6.2	1000

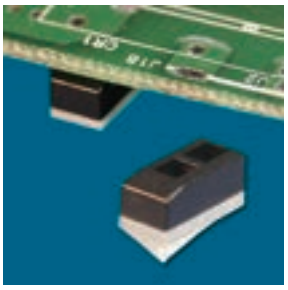

P.C. 板间隔柱 SPACER SUPPORT 3-64-3

- MATERIAL: PC(UL)
- FLAME CLASS: 94V-0/94V-2
- COLOR: BLACK
- ADHESIVE TAPE: 3M

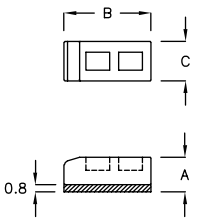

PART NO	A	B	C	PACKAGE
MSR-4Q	3.95	10.0	4.5	2000

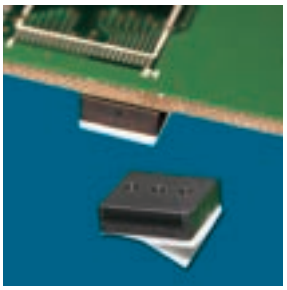

P.C. 板间隔柱 SPACER SUPPORT 3-64-4

- MATERIAL: NYLON 66(UL)
- FLAME CLASS: 94V-0/94V-2
- COLOR: BLACK
- ADHESIVE TAPE: 3M

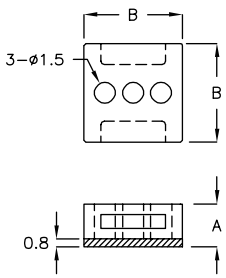

PART NO	A	B	PACKAGE
MSK-2C	3.3	10.0	2000
MSK-2F	3.3	7.0	
MSK-3AF	3.8	10.0	1000
MSK-3D	4.3	10.0	
MSK-6K	6.1	10.0	

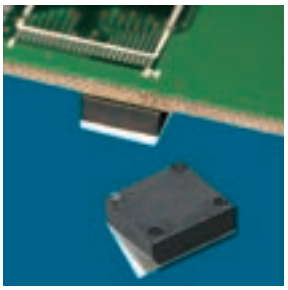

P.C. 板间隔柱 SPACER SUPPORT 3-64-5

- MATERIAL: NYLON 66(UL)
- FLAME CLASS: 94V-0/94V-2
- COLOR: BLACK
- ADHESIVE TAPE: 3M

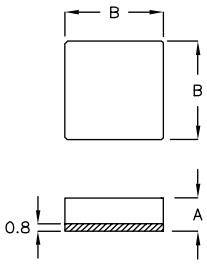

PART NO	A	B	PACKAGE
MSK-2A	3.3	10.0	2000
MSK-2RY	2.3	10.0	

返回图片索引

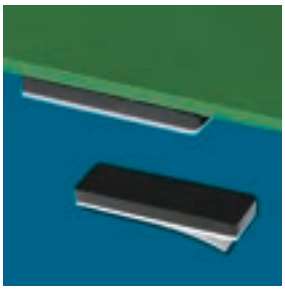

P.C. 板间隔柱 SPACER SUPPORT 3-65-1

- MATERIAL: NYLON 66(UL)
- FLAME CLASS: 94V-0/94V-2
- COLOR: BLACK
- ADHESIVE TAPE: 3M

PART NO	A	B	PACKAGE
MSLQ-2	2.35	18.0	1000

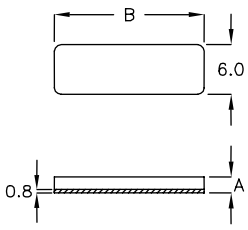

P.C. 板间隔柱 SPACER SUPPORT 3-65-2

- MATERIAL: NYLON 66(UL)
- FLAME CLASS: 94V-0/94V-2
- COLOR: NATURAL
- ADHESIVE TAPE: 3M

PART NO	A	B	C	PACKAGE
MSZ-3Q	3.8	7.0	6.0	2000

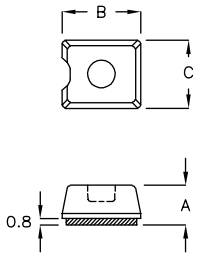

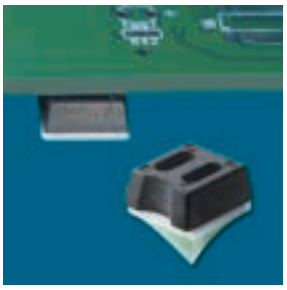

P.C. 板间隔柱 SPACER SUPPORT 3-65-3

- MATERIAL: NYLON 66(UL)
- FLAME CLASS: 94V-0/94V-2
- COLOR: BLACK
- ADHESIVE TAPE: 3M

PART NO	A	B	C	PACKAGE
MSZ-3KS	3.6	7.0	6.0	2000
MSZ-4ST	5.1	7.0	6.0	
MSZ-5RY	5.75	7.0	6.0	

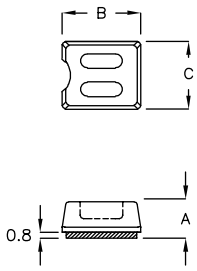

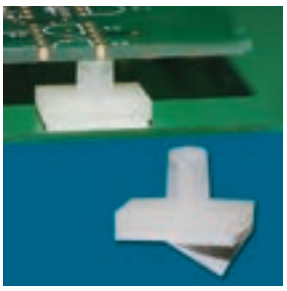

P.C. 板间隔柱 SPACER SUPPORT 3-65-4

- MATERIAL: NYLON 66(UL)
- FLAME CLASS: 94V-0/94V-2
- COLOR: NATURAL
- ADHESIVE TAPE: 3M

PART NO	A	PACKAGE
MSA-6A	7.7	500
MSA-10	9.8	

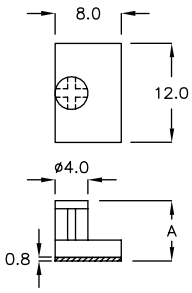

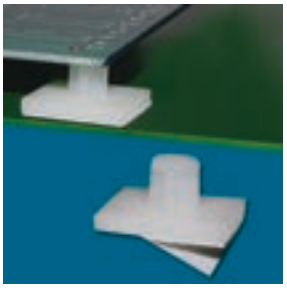

P.C. 板间隔柱 SPACER SUPPORT 3-65-5

- MATERIAL: NYLON 66(UL)
- FLAME CLASS: 94V-0/94V-2
- COLOR: NATURAL
- ADHESIVE TAPE: 3M

PART NO	A	B	C	PACKAGE
MST-05	5.0	12.0	ø6.9	500
MST-6C	6.35	12.0	ø6.9	
MST-07	7.0	18.1	ø6.9	
MST-9A	9.4	18.1	ø6.9	
MST-10FC	10.8	18.0	ø8.0	
MST-16	15.9	18.1	ø6.9	
MST-16SA	16.4	18.1	ø6.9	
MST-19BH	19.4	18.0	ø8.0	
MST-20CQ	20.6	18.1	ø6.9	
MST-22	21.8	18.0	ø6.9	
MST-37F	37.0	18.1	ø6.9	

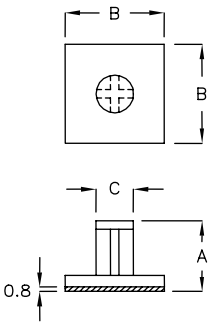

返回图片索引

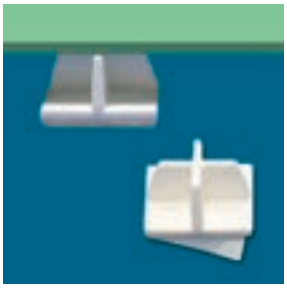

P.C. 板间隔柱 SPACER SUPPORT 3-66-1

- MATERIAL: NYLON 66(UL)
- FLAME CLASS: 94V-0/94V-2
- COLOR: NATURAL
- USE M3 TAPPING SCREW

PART NO	A	PACKAGE
MSQ-7A	8.4	500
MSQ-7C	7.5	
MSQ-27K	27.4	

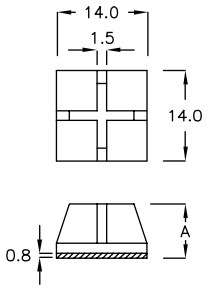

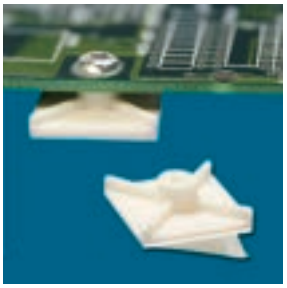

P.C. 板间隔柱 SPACER SUPPORT 3-66-2

- MATERIAL: NYLON 66(UL)
- FLAME CLASS: 94V-0/94V-2
- COLOR: NATURAL
- ADHESIVE TAPE: 3M
- USE M3 TAPPING SCREW

PART NO	A	C	PACKAGE
MSS-6A	6.35	ø7.0	500

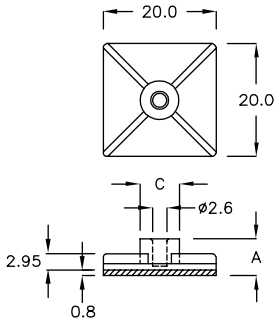

P.C. 板间隔柱 SPACER SUPPORT 3-66-3

- MATERIAL: NYLON 66(UL)
- FLAME CLASS: 94V-0/94V-2
- COLOR: NATURAL
- ADHESIVE TAPE: 3M

PART NO	A	ADHESIVE AREA	PACKAGE
MSB-6A	6.3	14.0x14.0	500
MSB-11A	12.6	14.0x14.0	

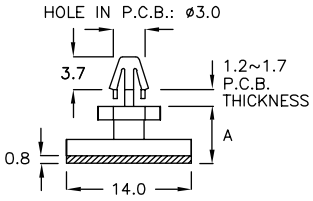

P.C. 板间隔柱 SPACER SUPPORT 3-66-4

- MATERIAL: NYLON 66(UL)
- FLAME CLASS: 94V-0/94V-2
- COLOR: NATURAL
- ADHESIVE TAPE: 3M

PART NO	A	ADHESIVE AREA	PACKAGE
MSBA-5TG	5.2	14.0x14.0	500

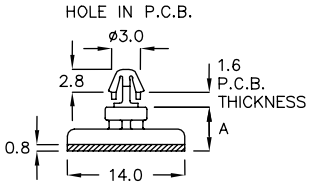

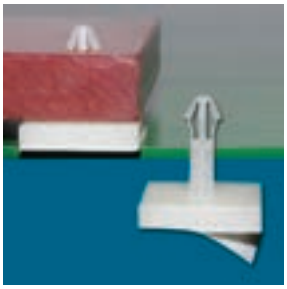

P.C. 板间隔柱 SPACER SUPPORT 3-66-5

- MATERIAL: NYLON 66(UL)
- FLAME CLASS: 94V-0/94V-2
- COLOR: NATURAL
- ADHESIVE TAPE: 3M

PART NO	A	ADHESIVE AREA	PACKAGE
MSP-03	2.8	14.0x16.0	2000

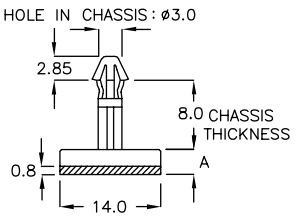

返回图片索引

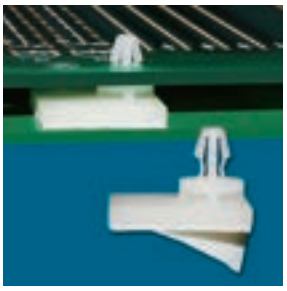

P.C. 板间隔柱 SPACER SUPPORT 3-67-1

- MATERIAL: NYLON 66(UL)
- FLAME CLASS: 94V-0/94V-2
- COLOR: NATURAL
- ADHESIVE TAPE: 3M

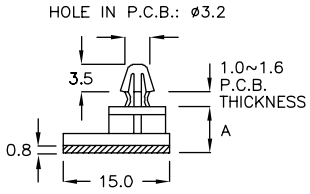

PART NO	A	ADHESIVE AREA	PACKAGE
AAA-01	3.0	15.0x15.0	500
AAA-3A	4.5	15.0x15.0	

P.C. 板间隔柱 SPACER SUPPORT 3-67-2

- MATERIAL: NYLON 66(UL)
- FLAME CLASS: 94V-0/94V-2
- COLOR: NATURAL
- ADHESIVE TAPE: 3M

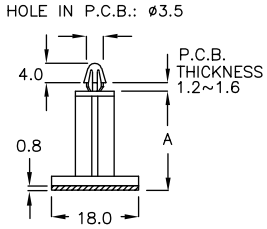

PART NO	A	ADHESIVE AREA	PACKAGE
MSC-20A	20.3	18.0x18.0	500

P.C. 板间隔柱 SPACER SUPPORT 3-67-3

- ATERIAL: NYLON 66(UL)
- FLAME CLASS: 94V-0/94V-2
- COLOR: NATURAL
- ADHESIVE TAPE: 3M

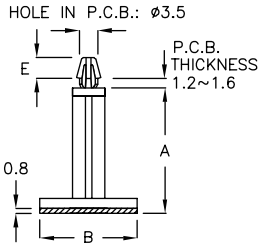

PART NO	A	E	B ADHESIVE AREA	PACKAGE
MSF-13F	13.8	2.9	14.5x14.5	1000
MSF-25	25.1	3.85	18.0x18.0	200

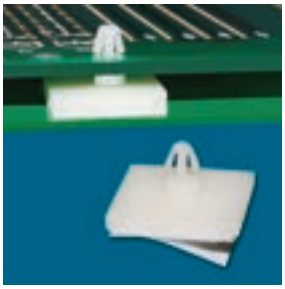

P.C. 板间隔柱 SPACER SUPPORT 3-67-4

- MATERIAL: NYLON 66(UL)
- FLAME CLASS: 94V-0/94V-2
- COLOR: NATURAL
- ADHESIVE TAPE: 3M

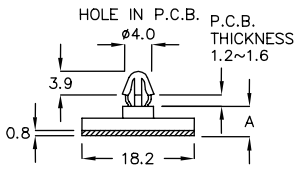

PART NO	A	ADHESIVE AREA	PACKAGE
SCTMS-5	4.8	18.2x18.2	500

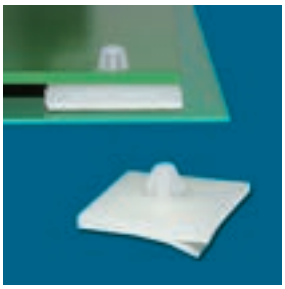

P.C. 板间隔柱 SPACER SUPPORT 3-67-5

- MATERIAL: NYLON 66(UL)
- FLAME CLASS: 94V-0/94V-2
- COLOR: NATURAL
- ADHESIVE TAPE: 3M

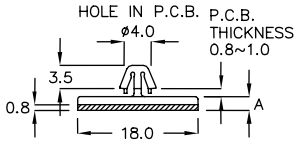

PART NO	A	ADHESIVE AREA	PACKAGE
MSY-2A	2.0	18.0x18.0	500

返回图片索引

P.C. 板间隔柱 SPACER SUPPORT 3-68-1

- MATERIAL: NYLON 66(UL)
- FLAME CLASS: 94V-0/94V-2
- COLOR: NATURAL
- ADHESIVE TAPE: 3M

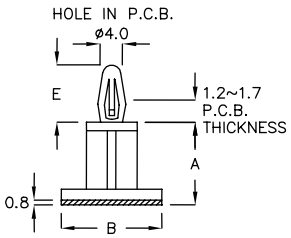

PART NO	A	E	B	ADHESIVE AREA	PACKAGE
MS-6	6.25	10.2	18.0	18.0x18.0	500
MS-8	8.0	9.7	18.0	18.0x18.0	
MS-10	9.5	10.1	18.0	18.0x18.0	
MS-11A	11.5	4.9	18.0	18.0x18.0	
MS-12	12.6	10.0	18.0	18.0x18.0	
MS-16A	16.4	10.0	19.9	19.9x19.9	
MS-19	19.3	10.2	18.0	18.0x18.0	200
MS-22	22.2	9.6	18.0	18.0x18.0	

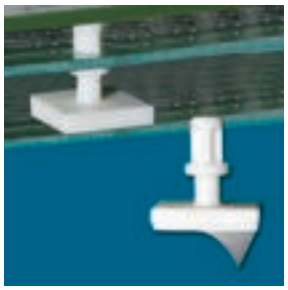

P.C. 板间隔柱 SPACER SUPPORT 3-68-2

- MATERIAL: NYLON 66(UL)
- FLAME CLASS: 94V-0/94V-2
- COLOR: NATURAL
- ADHESIVE TAPE: 3M

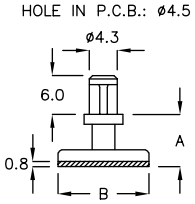

PART NO	A	B	ADHESIVE AREA	PACKAGE
MSH-8RL	8.0	14.0	14.0x14.0	500

P.C. 板间隔柱 SPACER SUPPORT 3-68-3

- MATERIAL: NYLON 66(UL)
- FLAME CLASS: 94V-0/94V-2
- COLOR: NATURAL
- ADHESIVE TAPE: 3M

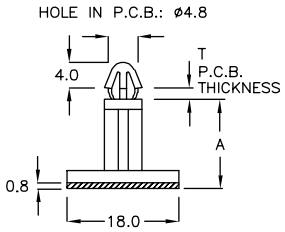

PART NO	A	ADHESIVE AREA	T P.C.B. THICKNESS	PACKAGE
MSD-15	14.2	18.0x18.0	1.2~1.6	500

P.C. 板间隔柱 SPACER SUPPORT 3-68-4

- MATERIAL: NYLON 66(UL)
- FLAME CLASS: 94V-0/94V-2
- COLOR: NATURAL

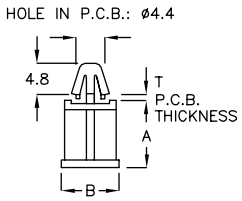

PART NO	A	B	T P.C.B. THICKNESS	PACKAGE
TCT-10A	10.8	ø9.0	0.6～0.8	1000

P.C. 板间隔柱 SPACER SUPPORT 3-68-5

- MATERIAL: NYLON 66(UL)
- FLAME CLASS: 94V-0/94V-2
- COLOR: NATURAL

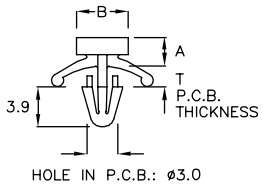

PART NO	A	B	T P.C.B. THICKNESS	PACKAGE
LSJ-2A	2.8	ø5.0	0.8~1.4	1000

返回图片索引

P.C. 板间隔柱 SPACER SUPPORT 3-69-1

- MATERIAL: NYLON 66(UL)
- FLAME CLASS: 94V-0/94V-2
- COLOR: NATURAL

PART NO	A	B	E	T P.C.B. THICKNESS	PACKAGE
LSF-05	5.15	ø4.3	3.15	0.8~1.6	2000
LSF-8KM	8.25	ø4.5	3.2	0.8~2.0	

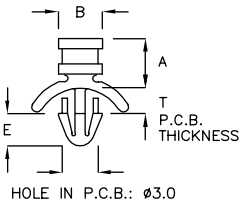

P.C. 板间隔柱 SPACER SUPPORT 3-69-2

- MATERIAL: NYLON 66(UL)
- FLAME CLASS: 94V-0/94V-2
- COLOR: NATURAL

PART NO	A	B	T P.C.B. THICKNESS	PACKAGE
LSH-2A	2.7	ø5.0	0.8~1.6	1000
LSH-2DH	1.8	ø5.0	0.8~1.6	

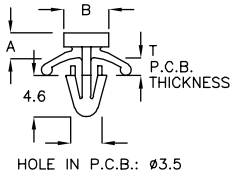

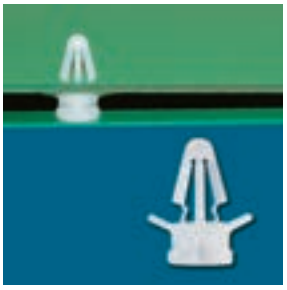

P.C. 板间隔柱 SPACER SUPPORT 3-69-3

- MATERIAL: NYLON 66(UL)
- FLAME CLASS: 94V-0/94V-2
- COLOR: NATURAL

PART NO	A	B	T CHASSIS THICKNESS	PACKAGE
TCBK-4A	4.1	ø6.8	1.2~1.6	1000

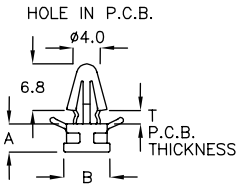

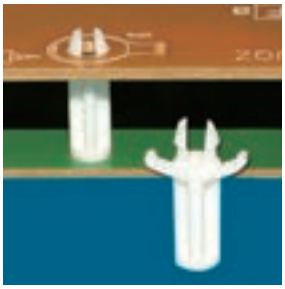

P.C. 板间隔柱 SPACER SUPPORT 3-69-4

- MATERIAL: NYLON 66(UL)
- FLAME CLASS: 94V-0/94V-2
- COLOR: NATURAL

PART NO	A	T P.C.B. THICKNESS	PACKAGE
TCG-09	9.0	1.4~1.6	1000
TCG-16	16.0	1.4~1.6	

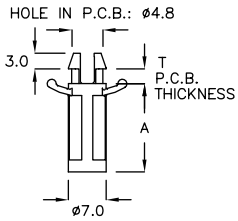

P.C. 板间隔柱 SPACER SUPPORT 3-69-5

- MATERIAL: NYLON 66(UL)
- FLAME CLASS: 94V-0/94V-2
- COLOR: NATURAL

PART NO	A	T P.C.B. THICKNESS	PACKAGE
TBK-14A	14.7	1.4~1.6	500
TBK-16F	16.0	1.4~1.6	1000
TBK-20	20.0	1.4~1.6	500
TBK-22	22.0	1.4~1.6	
TBK-34	34.0	1.4~1.6	

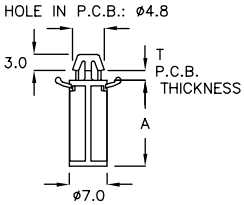

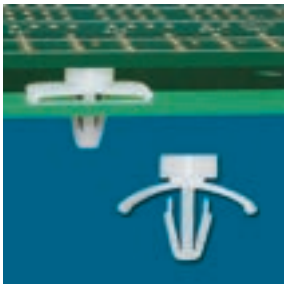

P.C. 板间隔柱 SPACER SUPPORT 3-70-1

- MATERIAL: NYLON 66(UL)
- FLAME CLASS: 94V-0/94V-2
- COLOR: NATURAL

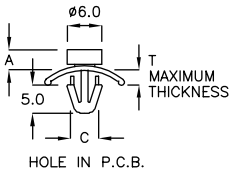

PART NO	A	C	T MAXIMUM THICKNESS	PACKAGE
LSC-3A	3.8	ø4.8~5.0	2.1	1000
LSC-3C	3.7	ø4.0	2.1	

P.C. 板间隔柱 SPACER SUPPORT 3-70-2

- MATERIAL: NYLON 66(UL)
- FLAME CLASS: 94V-0/94V-2
- COLOR: NATURAL

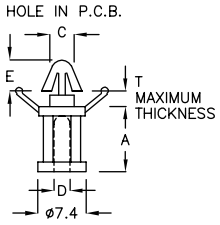

PART NO	A	C	T MAXIMUM THICKNESS	D TAPPING SCREW	E	PACKAGE
LSC-5	4.8	ø4.8~ø5.0	2.0	M3	5.6	1000
LSC-10	9.4	ø4.8~ø5.0	2.0	M3	5.6	
LSC-12	12.7	ø4.8~ø5.0	2.0	M3	5.6	500
LSC-15A	15.9	ø4.5~ø4.6	2.0	M3	5.6	
LSC-19	19.1	ø4.5~ø4.6	2.0	M3	5.6	

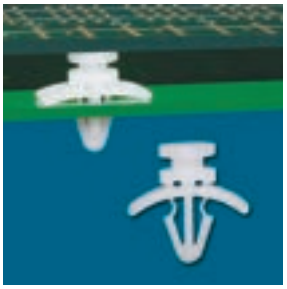

P.C. 板间隔柱 SPACER SUPPORT 3-70-3

- MATERIAL: NYLON 66(UL)
- FLAME CLASS: 94V-0/94V-2
- COLOR: NATURAL

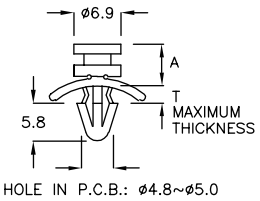

PART NO	A	T MAXIMUM THICKNESS	PACKAGE
LSC-6	6.35	2.0	1000

P.C. 板间隔柱 SPACER SUPPORT 3-70-4

- MATERIAL: NYLON 66(UL)
- FLAME CLASS: 94V-0/94V-2
- COLOR: NATURAL

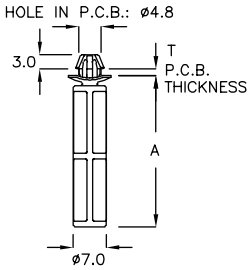

PART NO	A	T P.C.B. THICKNESS	PACKAGE
TBW-36A	36.2	1.6	500

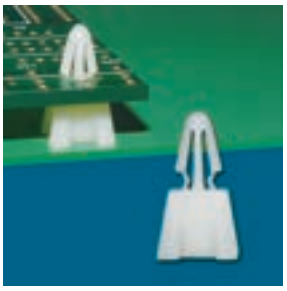

P.C. 板间隔柱 SPACER SUPPORT 3-70-5

- MATERIAL: NYLON 66(UL)
- FLAME CLASS: 94V-0/94V-2
- COLOR: NATURAL

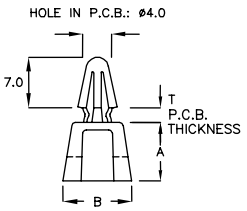

PART NO	A	B	T P.C.B. THICKNESS	PACKAGE
TCP-08	7.9	9.5	1.3~1.6	500

返回图片索引

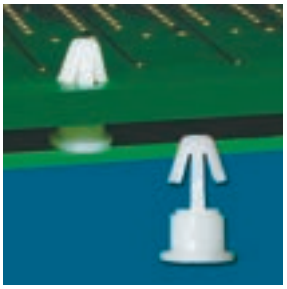

P.C. 板间隔柱 SPACER SUPPORT 3-71-1

- MATERIAL: NYLON 66(UL)
- FLAME CLASS: 94V-0/94V-2
- COLOR: NATURAL

PART NO	A	T P.C.B. THICKNESS	E	PACKAGE
MA-005	5.0	2.8~3.0	5.1	1000
MA-012	12.0	2.8~3.0	5.0	500
MA-014	14.0	2.8~3.0	5.0	

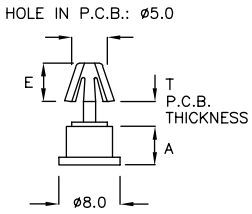

P.C. 板间隔柱 SPACER SUPPORT 3-71-2

- MATERIAL: NYLON 66(UL)
- FLAME CLASS: 94V-0/94V-2
- COLOR: NATURAL

INSERT WITH 90 DEGREE ANGLE AND PRESS DOWN

PART NO	A	T CHASSIS THICKNESS	PACKAGE
KPD-24A	20.4	1.0	1000

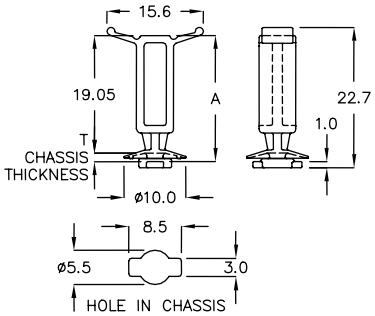

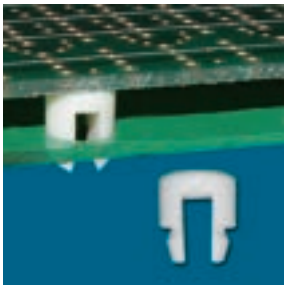

P.C. 板间隔柱 SPACER SUPPORT 3-71-3

- MATERIAL: NYLON 66(UL)
- FLAME CLASS: 94V-0/94V-2
- COLOR: NATURAL

PART NO	A	T CHASSIS THICKNESS	PACKAGE
MHG-05	4.65	0.6~0.8	1000

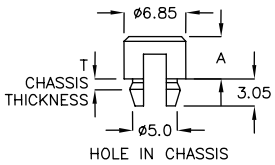

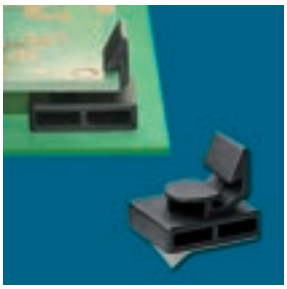

P.C. 板间隔柱 SPACER SUPPORT 3-71-4

- MATERIAL: NYLON 66(UL)
- FLAME CLASS: 94V-0/94V-2
- COLOR: BLACK
- ADHESIVE TAPE: 3M

PART NO	A	B	T P.C.B. THICKNESS	PACKAGE
LSS-8K	17.5	15.9	1.8	500

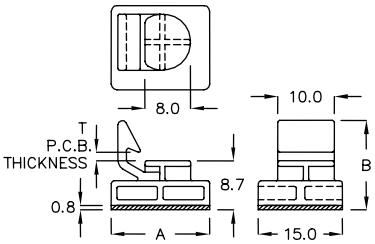

P.C. 板间隔柱 SPACER SUPPORT 3-71-5

- MATERIAL: NYLON 66(UL)
- FLAME CLASS: 94V-0/94V-2
- COLOR: NATURAL
- ADHESIVE TAPE: 3M

PART NO	A	D	PACKAGE
FKD-16Y	15.0	0.8	1000

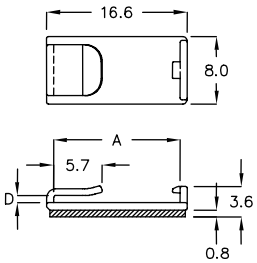

返回图片索引

P.C. 板间隔柱 SPACER SUPPORT 3-72-1

- MATERIAL: NYLON 66(UL)
- FLAME CLASS: 94V-0/94V-2
- COLOR: NATURAL
- ADHESIVE TAPE: 3M

PART NO	A	D	PACKAGE
FKM−27JC	23.8	2.4	200

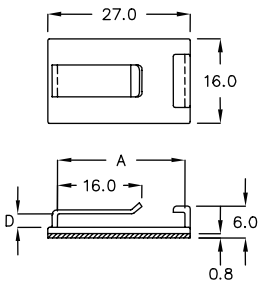

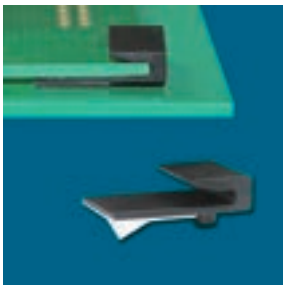

P.C. 板间隔柱 SPACER SUPPORT 3-72-2

- MATERIAL: PC(UL)
- FLAME CLASS: 94V-2
- COLOR: BLACK
- ADHESIVE TAPE: 3M

PART NO	A	D	PACKAGE
MWF−13C	5.0	1.6	1000

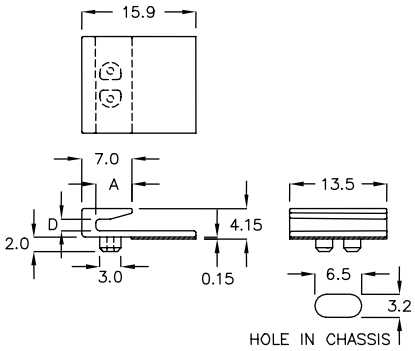

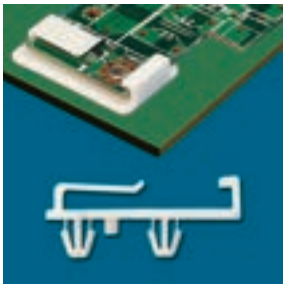

P.C. 板间隔柱 SPACER SUPPORT 3-72-3

- MATERIAL: NYLON 66(UL)
- FLAME CLASS: 94V-0/94V-2
- COLOR: NATURAL

PART NO	A	D	T P.C.B. THICKNESS	PACKAGE
FKC−31AP	28.7	1.7	0.5~0.8	200
FKC−31Y	28.7	2.5	0.6~0.8	

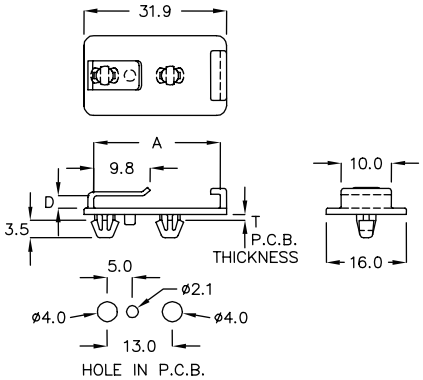

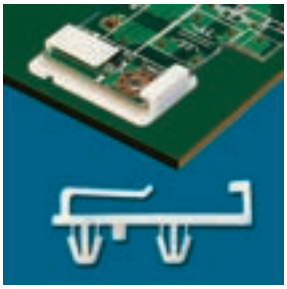

P.C. 板间隔柱 SPACER SUPPORT 3-72-4

- MATERIAL: NYLON 66(UL)
- FLAME CLASS: 94V-0/94V-2
- COLOR: NATURAL

PART NO	A	D	T P.C.B. THICKNESS	PACKAGE
FKC−28AS	25.3	2.5	0.6~0.8	200

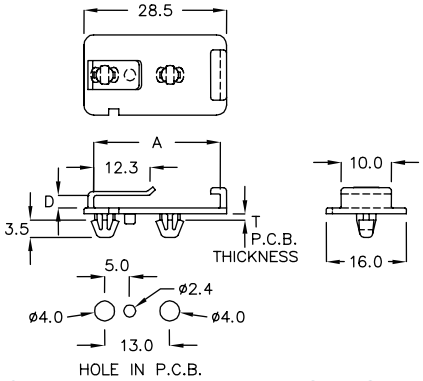

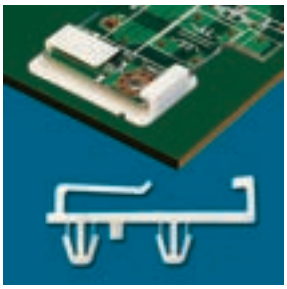

P.C. 板间隔柱 SPACER SUPPORT 3-72-5

- MATERIAL: NYLON 66(UL)
- FLAME CLASS: 94V-0/94V-2
- COLOR: NATURAL

PART NO	A	D	T P.C.B. THICKNESS	PACKAGE
FKC−28PQ	25.3	2.5	0.6~0.8	200

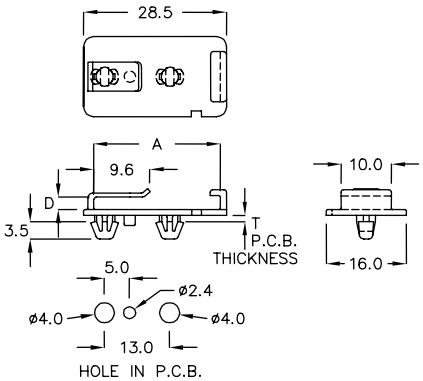

返回图片索引

P.C. 板间隔柱 SPACER SUPPORT 3-73-1

- MATERIAL: NYLON 66(UL)
- FLAME CLASS: 94V-0/94V-2
- COLOR: BLACK

WITH LOCK FEATURE

PART NO	A	T P.C.B. THICKNESS	PACKAGE
CYF−21	21.6	0.6~0.8	100

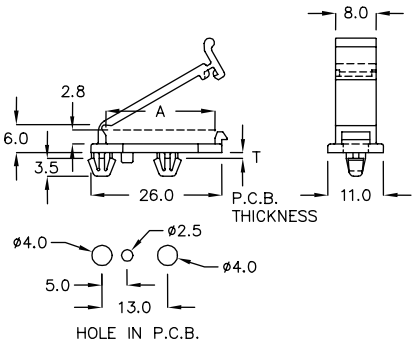

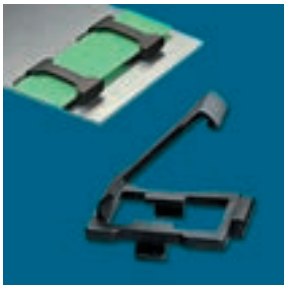

P.C. 板间隔柱 SPACER SUPPORT 3-73-2

- MATERIAL: NYLON 66(UL)
- FLAME CLASS: 94V-0/94V-2
- COLOR: BLACK

WITH LOCK FEATURE

PART NO	A	B	T CHASSIS THICKNESS	PACKAGE
CYFJ−15T	15.2	21.4	0.8~1.0	200
CYFJ−16A	16.5	20.7	0.8~1.0	

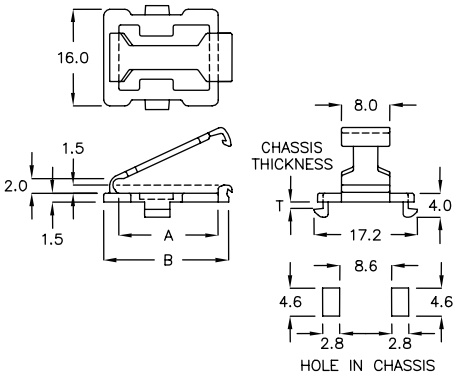

P.C. 板间隔柱 SPACER SUPPORT 3-73-3

- MATERIAL: NYLON 66(UL)
- FLAME CLASS: 94V-0/94V-2
- COLOR: BLACK

WITH LOCK FEATURE

PART NO	A	B	T CHASSIS THICKNESS	PACKAGE
CYFQ−22	22.4	26.1	0.8~1.0	100

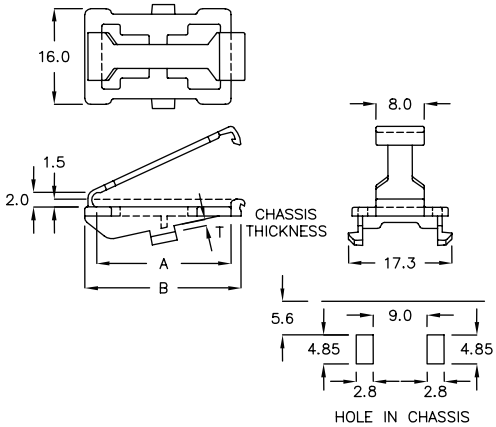

P.C. 板间隔柱 SPACER SUPPORT 3-73-4

- MATERIAL: NYLON 66(UL)
- FLAME CLASS: 94V-0/94V-2
- COLOR: NATURAL

WITH LOCK FEATURE

PART NO	A	T CHASSIS THICKNESS	PACKAGE
CYFG−17A	17.9	0.6~0.8	200

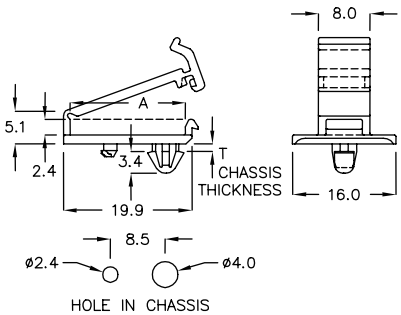

返回图片索引

P.C. 板间隔柱 SPACER SUPPORT 3-74-1

- MATERIAL: NYLON 66(UL)
- FLAME CLASS: 94V-0/94V-2
- COLOR: NATURAL

WITH LOCK FEATURE

PART NO	A	D	T CHASSIS THICKNESS	PACKAGE
CYFK-24D	24.5	2.3	0.5~0.8	100

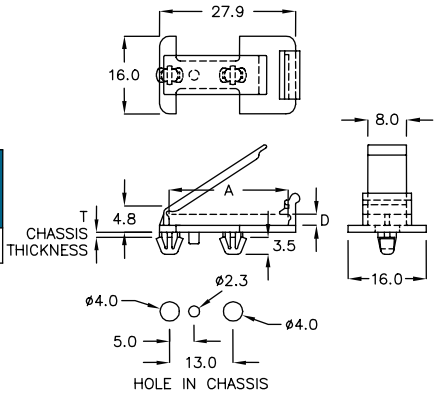

P.C. 板间隔柱 SPACER SUPPORT 3-74-2

- MATERIAL: NYLON 66(UL)
- FLAME CLASS: 94V-0/94V-2
- COLOR: NATURAL

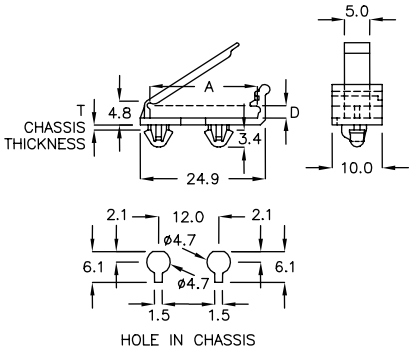

WITH LOCK FEATURE

PART NO	A	D	T CHASSIS THICKNESS	PACKAGE
CYFT-21A	21.5	2.35	0.6~0.8	100

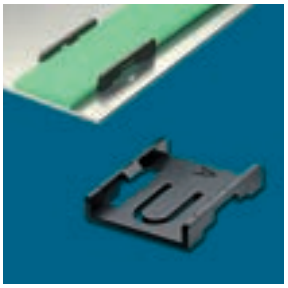

P.C. 板间隔柱 SPACER SUPPORT 3-74-3

- MATERIAL: ABS(UL)
- FLAME CLASS: 94HB
- COLOR: BLACK

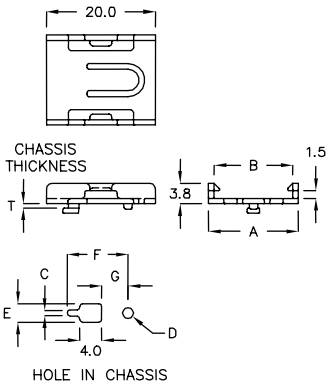

	PART NO	A	B	C	D	E	F	G	T CHASSIS THICKNESS	PACKAGE
	FKJ-14S	16.5	14.5	1.5	ø1.8	4.0	6.0	5.1	0.7	500
	FKJ-15D	17.0	15.0	1.2	ø1.8	4.0	6.0	5.1	0.5	
★	FKJ-15Y	17.5	15.5	1.5	ø1.8	4.0	11.1	5.1	0.6~0.7	
	FKJ-15A	17.5	15.5	1.2	ø2.0	3.4	11.1	4.8	0.8	
★	FKJ-15F	17.5	15.5	2.4	ø2.0	4.6	11.2	3.7	1.0	

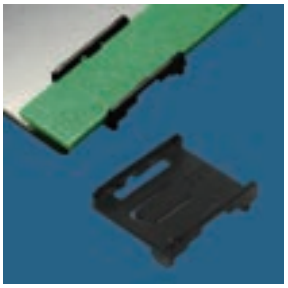

P.C. 板间隔柱 SPACER SUPPORT 3-74-4

- MATERIAL: ABS(UL)
- FLAME CLASS: 94HB
- COLOR: BLACK

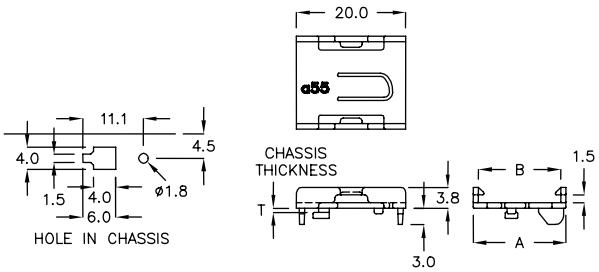

PART NO	A	B	T CHASSIS THICKNESS	PACKAGE
FKJR-15	17.0	15.0	0.6	500

返回图片索引

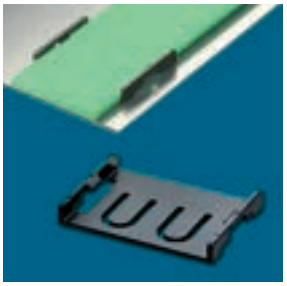

P.C. 板间隔柱 SPACER SUPPORT 3-75-1

- MATERIAL: ABS(UL)
- FLAME CLASS: 94HB
- COLOR: BLACK

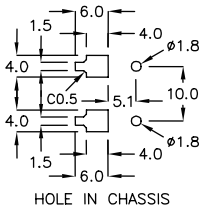

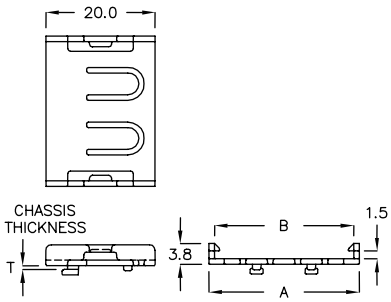

PART NO	A	B	T CHASSIS THICKNESS	PACKAGE
FKJD-25	27.5	25.5	0.7	200

P.C. 板间隔柱 SPACER SUPPORT 3-75-2

- MATERIAL: NYLON 66(UL)
- FLAME CLASS: 94V-0/94V-2
- COLOR: NATURAL

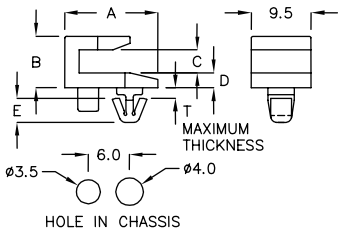

PART NO	A	B	C	D	E	T MAXIMUM THICKNESS	PACKAGE
UB-02C	13.5	7.5	3.3	2.2	3.5	1.3	500

P.C. 板间隔柱 SPACER SUPPORT 3-75-3

- MATERIAL: NYLON 66(UL)
- FLAME CLASS: 94V-0/94V-2
- COLOR: NATURAL

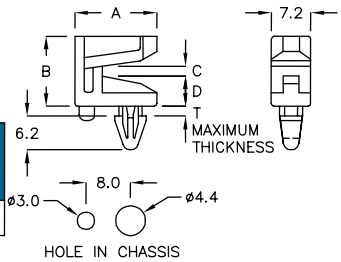

PART NO	A	B	C	D	T MAXIMUM THICKNESS	PACKAGE
UB-05A	15.0	12.8	1.8	5.5	1.6	500

P.C. 板间隔柱 SPACER SUPPORT 3-75-4

- MATERIAL: NYLON 66(UL)
- FLAME CLASS: 94V-0/94V-2
- COLOR: NATURAL

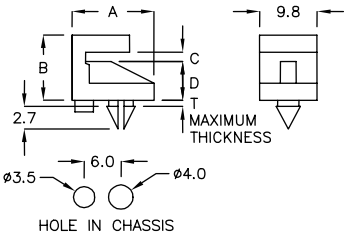

PART NO	A	B	C	D	T MAXIMUM THICKNESS	PACKAGE
UB-6	12.6	10.8	1.7	6.0	1.0	500

P.C. 板间隔柱 SPACER SUPPORT 3-75-5

- MATERIAL: NYLON 66(UL)
- FLAME CLASS: 94V-0/94V-2
- COLOR: NATURAL

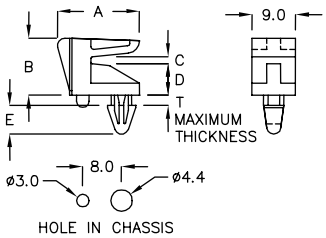

PART NO	A	B	C	D	E	T MAXIMUM THICKNESS	PACKAGE
UB-6BT	17.5	12.0	1.4	6.5	6.3	1.6	500
UB-6CT	17.5	11.8	1.6	6.35	6.0	1.6	

返回图片索引

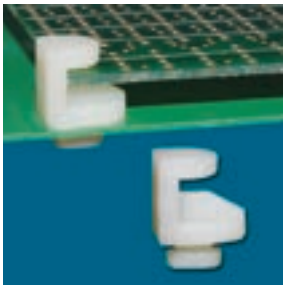

P.C. 板间隔柱 SPACER SUPPORT 3-76-1

- MATERIAL: NYLON 66(UL)
- FLAME CLASS: 94V-0/94V-2
- COLOR: NATURAL

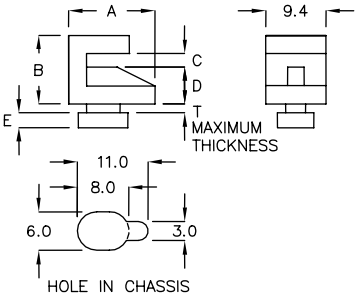

PART NO	A	B	C	D	E	T MAXIMUM THICKNESS	PACKAGE
UB-6A	12.5	10.9	1.9	5.9	2.6	1.2	500
UB-6D	12.3	11.6	2.3	6.4	2.5	1.2	

P.C. 板间隔柱 SPACER SUPPORT 3-76-2

- MATERIAL: NYLON 66(UL)
- FLAME CLASS: 94V-0/94V-2
- COLOR: NATURAL

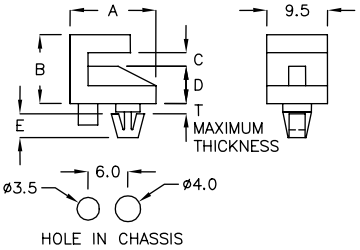

PART NO	A	B	C	D	E	T MAXIMUM THICKNESS	PACKAGE
UB-6E	13.5	10.8	2.4	6.4	3.5	1.3	500
UB-6K	13.4	10.8	2.1	6.0	3.7	2.1	

P.C. 板间隔柱 SPACER SUPPORT 3-76-3

- MATERIAL: NYLON 66(UL)
- FLAME CLASS: 94V-0/94V-2
- COLOR: NATURAL

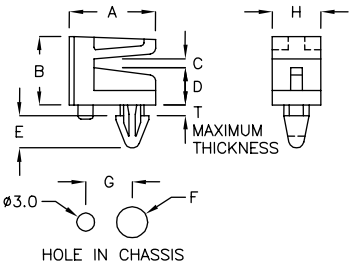

PART NO	A	B	C	D	E	F	G	H	T MAXIMUM THICKNESS	PACKAGE
UB-06H	21.5	11.8	1.3	6.6	6.0	ø4.4	8.0	9.0	1.6	500
UB-6T	14.8	11.9	1.3	6.6	5.9	ø4.4	8.0	9.0	1.7	
UB-06U	12.0	11.8	1.3	6.6	6.0	ø4.4	6.5	6.0	1.8	
UB-08U	12.0	14.0	2.0	8.5	7.0	ø4.4	6.5	6.0	0.8	
UB-14T	15.0	19.2	1.3	14.0	5.9	ø4.4	8.0	9.0	1.8	200
UB-18T	15.5	23.6	1.6	18.3	6.0	ø5.0	8.5	9.0	1.8	

P.C. 板间隔柱 SPACER SUPPORT 3-76-4

- MATERIAL: NYLON 66(UL)
- FLAME CLASS: 94V-0/94V-2
- COLOR: NATURAL

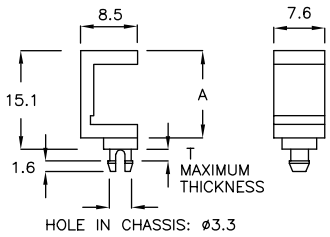

PART NO	A	T MAXIMUM THICKNESS	PACKAGE
UB-7	13.3	1.6	500

返回图片索引

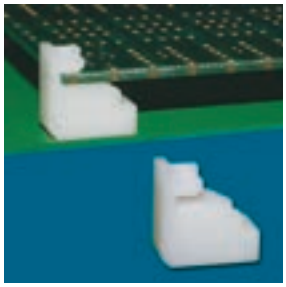

P.C. 板间隔柱 SPACER SUPPORT 3-77-1

- MATERIAL: NYLON 66(UL)
- FLAME CLASS: 94V-0/94V-2
- COLOR: NATURAL
- USE M3 TAPPING SCREW

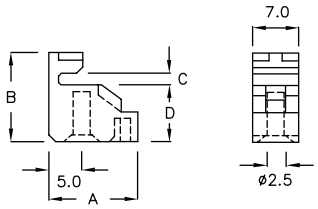

PART NO	A	B	C	D	PACKAGE
UB-09K	13.5	13.6	1.8	8.6	500

P.C. 板间隔柱 SPACER SUPPORT 3-77-2

- MATERIAL: NYLON 66(UL)
- FLAME CLASS: 94V-0/94V-2
- COLOR: NATURAL
- ADHESIVE TAPE: 3M

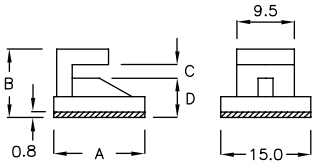

PART NO	A	B	C	D	PACKAGE
UB-6F	15.0	11.1	2.2	6.35	500
UB-11F	15.0	15.8	2.4	10.8	
UB-12F	15.0	16.7	2.3	11.9	

P.C. 板间隔柱 SPACER SUPPORT 3-77-3

- MATERIAL: NYLON 66(UL)
- FLAME CLASS: 94V-0/94V-2
- COLOR: NATURAL
- ADHESIVE TAPE: 3M

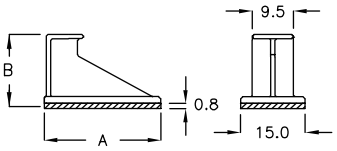

PART NO	A	B	PACKAGE
UBC-17	27.0	16.7	500

P.C. 板间隔柱 SPACER SUPPORT 3-77-4

- MATERIAL: NYLON 66(UL)
- FLAME CLASS: 94V-0/94V-2
- COLOR: NATURAL

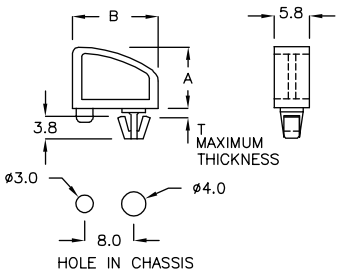

PART NO	A	B	T MAXIMUM THICKNESS	PACKAGE
UA-10	10.0	14.0	1.2	500

P.C. 板间隔柱 SPACER SUPPORT 3-77-5

- MATERIAL: NYLON 66(UL)
- FLAME CLASS: 94V-0/94V-2
- COLOR: NATURAL

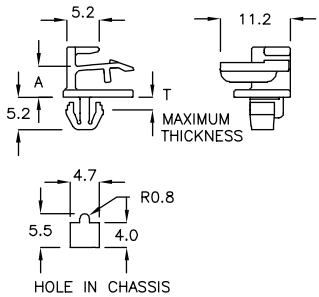

PART NO	A	T MAXIMUM THICKNESS	PACKAGE
UBL-05	5.0	1.6	500

返回图片索引

P.C. 板间隔柱 SPACER SUPPORT 3-78-1

- MATERIAL: NYLON 66(UL)
- FLAME CLASS: 94V-0/94V-2
- COLOR: NATURAL

PART NO	A	T MAXIMUM THICKNESS	PACKAGE
UNB-11	10.0	2.0	500

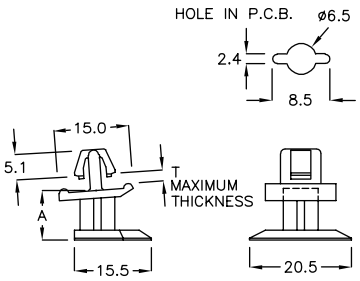

P.C. 板间隔柱 SPACER SUPPORT 3-78-2

- MATERIAL: NYLON 66(UL)
- FLAME CLASS: 94V-0/94V-2
- COLOR: NATURAL

PART NO	A	G	PACKAGE
UNC-10A	9.1	8.5°	500

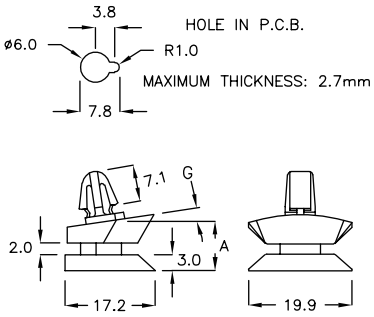

P.C. 板间隔柱 SPACER SUPPORT 3-78-3

- MATERIAL: NYLON 66(UL)
- FLAME CLASS: 94V-0/94V-2
- COLOR: NATURAL

PART NO	A	PACKAGE
UNG-8	8.2	500

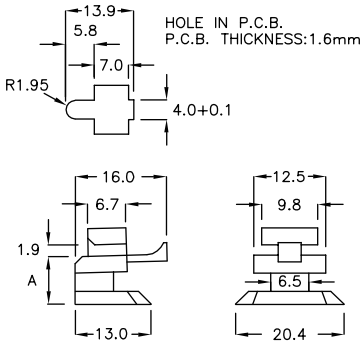

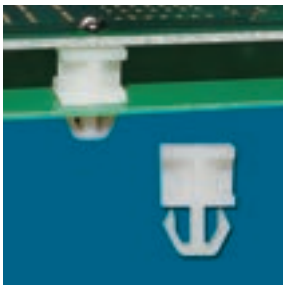

P.C. 板间隔柱 SPACER SUPPORT 3-78-4

- MATERIAL: NYLON 66(UL)
- FLAME CLASS: 94V-0/94V-2
- COLOR: NATURAL
- USE M3 TAPPING SCREW

PART NO	A	T MAXIMUM THICKNESS	PACKAGE
CH-08F	8.0	2.0	500
CH-10K	10.0	1.4	

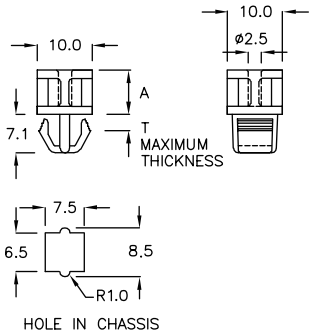

P.C. 板间隔柱 SPACER SUPPORT 3-78-5

- MATERIAL: NYLON 66(UL)
- FLAME CLASS: 94V-0/94V-2
- COLOR: NATURAL
- USE M3 TAPPING SCREW

PART NO	A	T MAXIMUM THICKNESS	PACKAGE
CH-08K	8.0	2.0	500

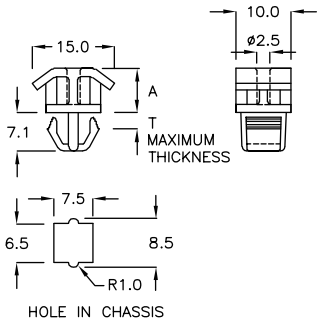

返回图片索引

P.C. 板间隔柱 SPACER SUPPORT 3-79-1

- MATERIAL: NYLON 66(UL)
- FLAME CLASS: 94V-0/94V-2
- COLOR: NATURAL

PART NO	A	C CHASSIS THICKNESS	T CHASSIS THICKNESS	PACKAGE
MQG-12P	12.7	0.6~0.8	4.7	500

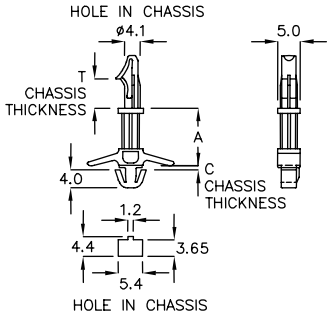

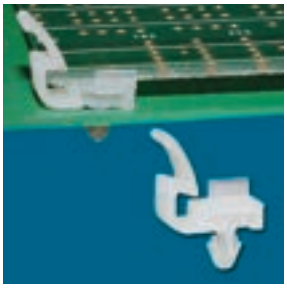

P.C. 板间隔柱 SPACER SUPPORT 3-79-2

- MATERIAL: NYLON 66(UL)
- FLAME CLASS: 94V-0/94V-2
- COLOR: NATURAL

PART NO	A	C CHASSIS THICKNESS	T P.C.B. THICKNESS	PACKAGE
LSB-3A	3.2	1.4~1.6	0.8~1.6	1000

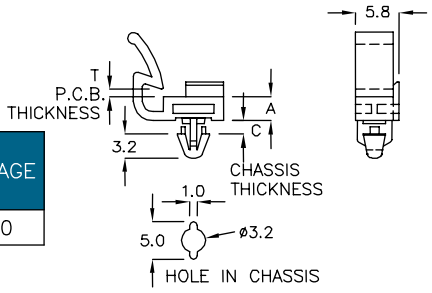

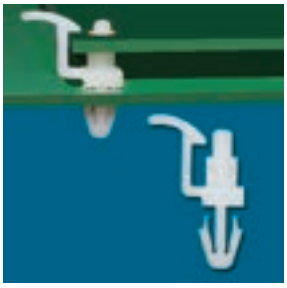

P.C. 板间隔柱 SPACER SUPPORT 3-79-3

- MATERIAL: NYLON 66(UL)
- FLAME CLASS: 94V-0/94V-2
- COLOR: NATURAL

PART NO	A	G	C CHASSIS THICKNESS	T P.C.B. THICKNESS	PACKAGE
LTY-5A	5.4	8.4	2.2~2.4	0.8~1.0	500

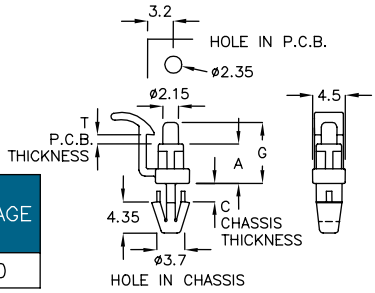

P.C. 板间隔柱 SPACER SUPPORT 3-79-4

- MATERIAL: NYLON 66(UL)
- FLAME CLASS: 94V-0/94V-2
- COLOR: NATURAL

PART NO	A	G	C CHASSIS THICKNESS	PACKAGE
LKB-6PA	7.0	11.7	1.4~1.6	1000

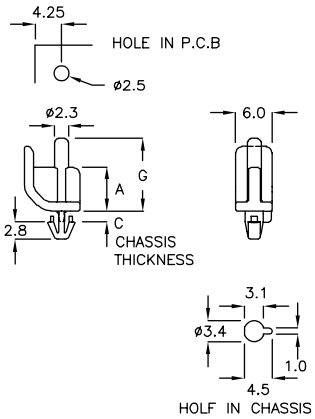

P.C. 板间隔柱 SPACER SUPPORT 3-79-5

- MATERIAL: NYLON 66(UL)
- FLAME CLASS: 94V-0/94V-2
- COLOR: NATURAL

PART NO	A	G	C CHASSIS THICKNESS	PACKAGE
LKB-6FQ	6.2	11.7	2.2~2.4	1000

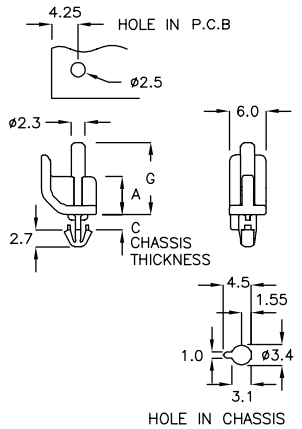

返回图片索引

P.C. 板间隔柱 SPACER SUPPORT 3-80-1

- MATERIAL: NYLON 66(UL)
- FLAME CLASS: 94V-0/94V-2
- COLOR: BLACK

PART NO	A	G	C CHASSIS THICKNESS	PACKAGE
LCZ-8PH	8.0	10.7	1.6	2000

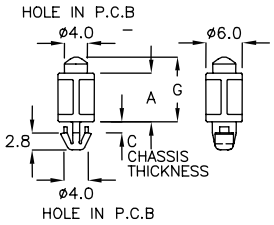

P.C. 板间隔柱 SPACER SUPPORT 3-80-2

- MATERIAL: NYLON 66(UL)
- FLAME CLASS: 94V-0/94V-2
- COLOR: NATURAL

PART NO	A	G	C P.C.B. THICKNESS	PACKAGE
LKC-8A	8.0	13.0	1.6	2000

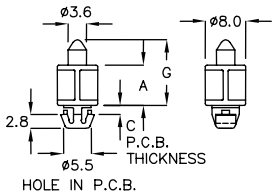

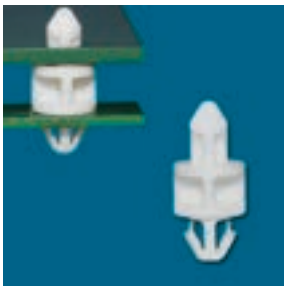

P.C. 板间隔柱 SPACER SUPPORT 3-80-3

- MATERIAL: NYLON 66(UL)
- FLAME CLASS: 94V-0/94V-2
- COLOR: NATURAL

PART NO	A	G	C P.C.B. THICKNESS	PACKAGE
LKN-5T	5.0	11.0	1.6	2000

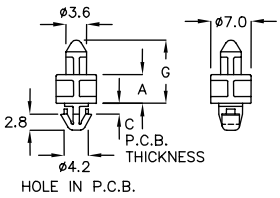

P.C. 板间隔柱 SPACER SUPPORT 3-80-4

- MATERIAL: NYLON 66(UL)
- FLAME CLASS: 94V-0/94V-2
- COLOR: BLACK

PART NO	A	G	C CHASSIS THICKNESS	PACKAGE
LKN-11HR	11.6	16.5	2.6	1000

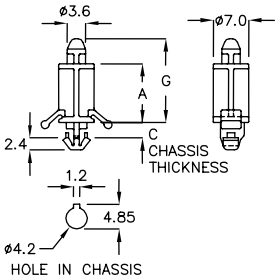

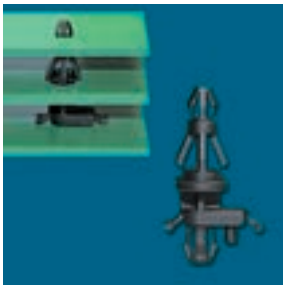

P.C. 板间隔柱 SPACER SUPPORT 3-80-5

- MATERIAL: NYLON 66(UL)
- FLAME CLASS: 94V-0/94V-2
- COLOR: NATURAL,BLACK

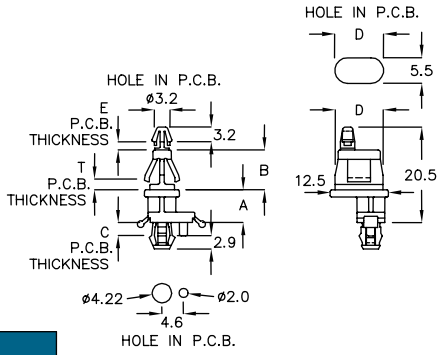

PART NO	A	B	C P.C.B. THICKNESS	D HOLE IN P.C.B.	E P.C.B. THICKNESS	T P.C.B. THICKNESS	PACKAGE
LMWY-26	7.0	8.6	2.36 or 1.92	10.5	1.6	1.6	1000

返回图片索引

P.C. 板间隔柱 SPACER SUPPORT 3-81-1

- MATERIAL: NYLON 66(UL)
- FLAME CLASS: 94V-0/94V-2
- COLOR: NATURAL

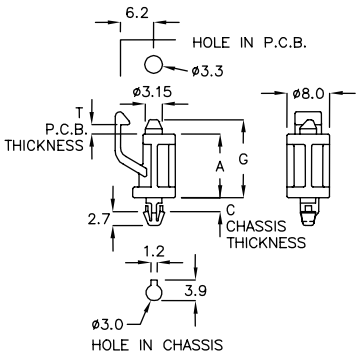

PART NO	A	G	C CHASSIS THICKNESS	T P.C.B. THICKNESS	PACKAGE
LTZ-12HC	12.0	14.7	2.4	1.6	500

P.C. 板间隔柱 SPACER SUPPORT 3-81-2

- MATERIAL: NYLON 66(UL)
- FLAME CLASS: 94V-0/94V-2
- COLOR: NATURAL

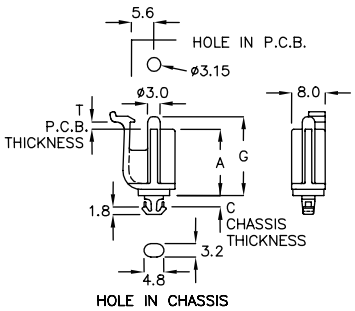

PART NO	A	G	C CHASSIS THICKNESS	T P.C.B. THICKNESS	PACKAGE
LTKL-16	16.0	19.0	2.5	1.4~1.6	500

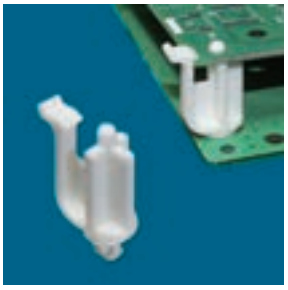

P.C. 板间隔柱 SPACER SUPPORT 3-81-3

- MATERIAL: NYLON 66(UL)
- FLAME CLASS: 94V-0/94V-2
- COLOR: NATURAL

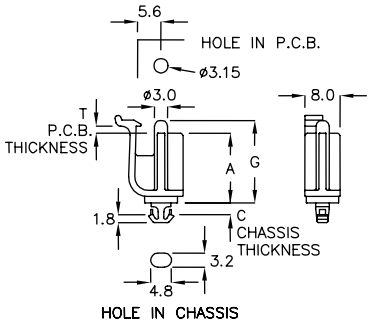

PART NO	A	G	C CHASSIS THICKNESS	T P.C.B. THICKNESS	PACKAGE
LTKR-16C	16.0	19.0	2.5	1.4~1.6	500

P.C. 板间隔柱 SPACER SUPPORT 3-81-4

- MATERIAL: NYLON 66(UL)
- FLAME CLASS: 94V-0/94V-2
- COLOR: NATURAL

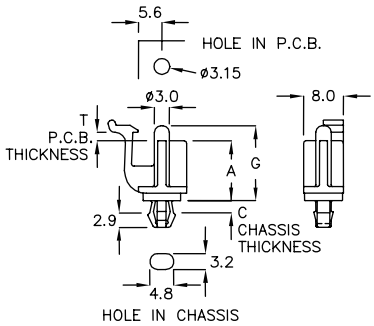

PART NO	A	G	C CHASSIS THICKNESS	T P.C.B. THICKNESS	PACKAGE
LTEL-12F	12.0	15.0	1.8~2.2	1.6	500

返回图片索引

P.C. 板间隔柱 SPACER SUPPORT 3-82-1

- MATERIAL: NYLON 66(UL)
- FLAME CLASS: 94V-0/94V-2
- COLOR: NATURAL

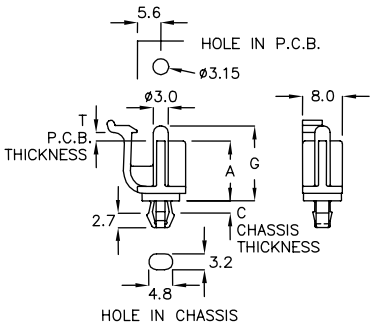

PART NO	A	G	C CHASSIS THICKNESS	T P.C.B. THICKNESS	PACKAGE
LTER-12G	12.0	15.0	1.8~2.2	1.6	500

P.C. 板间隔柱 SPACER SUPPORT 3-82-2

- MATERIAL: NYLON 66(UL)
- FLAME CLASS: 94V-0/94V-2
- COLOR: NATURAL

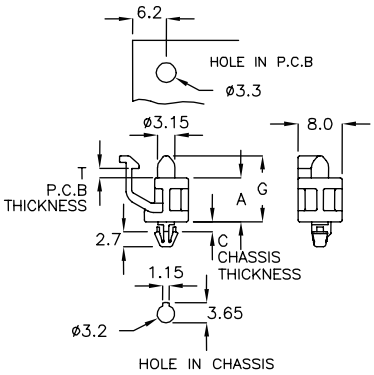

PART NO	A	G	T P.C.B THICKNESS	C CHASSIS THICKNESS	PACKAGE
LTN-8G	8.0	12.0	1.6	1.6	1000

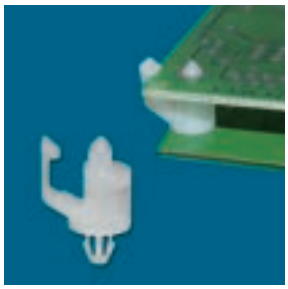

P.C. 板间隔柱 SPACER SUPPORT 3-82-3

- MATERIAL: NYLON 66(UL)
- FLAME CLASS: 94V-0/94V-2
- COLOR: NATURAL

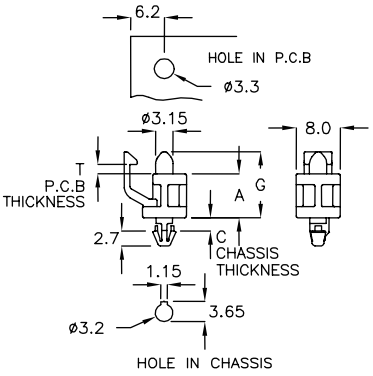

PART NO	A	G	T P.C.B THICKNESS	C CHASSIS THICKNESS	PACKAGE
LTN-8CK	8.0	12.0	1.6	2.2	1000

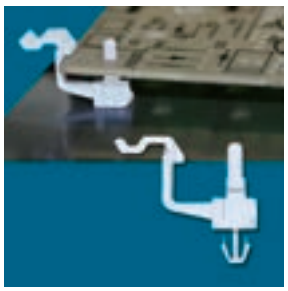

P.C. 板间隔柱 SPACER SUPPORT 3-82-4

- MATERIAL: NYLON 66(UL)
- FLAME CLASS: 94V-0/94V-2
- COLOR: BLUE,BLACK

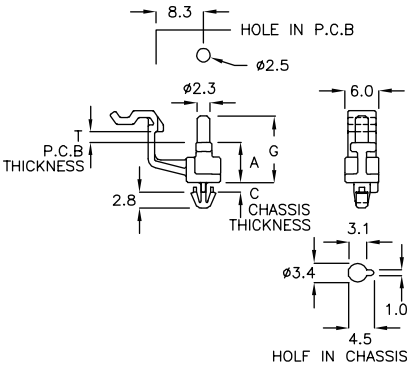

PART NO	A	G	T P.C.B THICKNESS	C CHASSIS THICKNESS	PACKAGE
LMM-6DA	7.0	11.7	1.4~1.6	1.4~1.6	1000

返回图片索引

P.C. 板间隔柱 SPACER SUPPORT 3-83-1

- MATERIAL: NYLON 66(UL)
- FLAME CLASS: 94V-0/94V-2
- COLOR: NATURAL

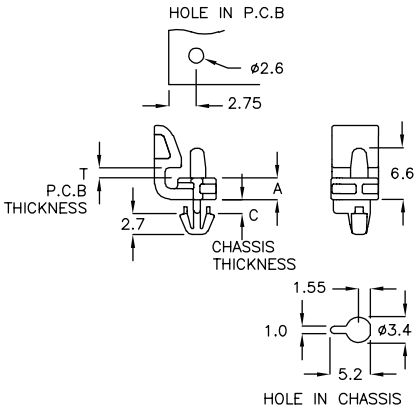

PART NO	A	T P.C.B THICKNESS	C CHASSIS THICKNESS	PACK AGE
LMF−2K	2.8	0.8~1.0	1.4~1.6	1000

P.C. 板间隔柱 SPACER SUPPORT 3-83-2

- MATERIAL: NYLON 66(UL)
- FLAME CLASS: 94V-0/94V-2
- COLOR: NATURAL

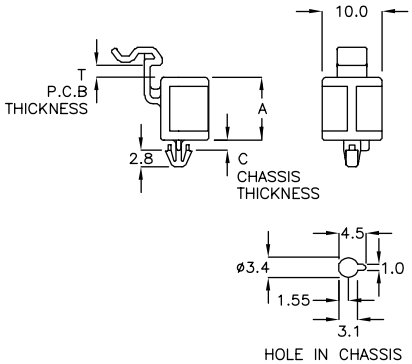

PART NO	A	T P.C.B. THICKNESS	C CHASSIS THICKNESS	PACKAGE
LMH−11	10.5	1.6~1.8	1.4~1.6	1000

P.C. 板间隔柱 SPACER SUPPORT 3-83-3

- MATERIAL: NYLON 66(UL)
- FLAME CLASS: 94V-0/94V-2
- COLOR: NATURAL

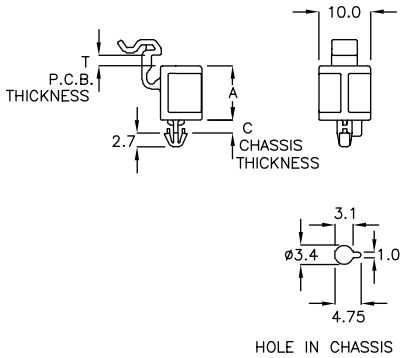

PART NO	A	T P.C.B THICKNESS	C CHASSIS THICKNESS	PACKAGE
LMH−11SA	10.5	1.6~1.8	2.2~2.4	1000

P.C. 板间隔柱 SPACER SUPPORT 3-83-4

- MATERIAL: NYLON 66(UL)
- FLAME CLASS: 94V-0/94V-2
- COLOR: NATURAL

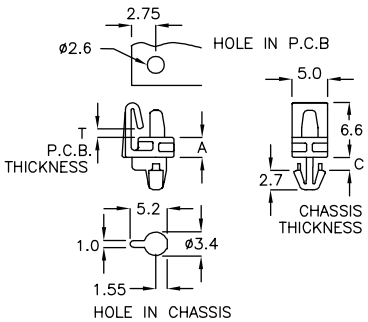

PART NO	A	T P.C.B THICKNESS	C CHASSIS THICKNESS	PACKAGE
LMK−2YW	2.8	0.8~1.0	1.4~1.6	2000

返回图片索引

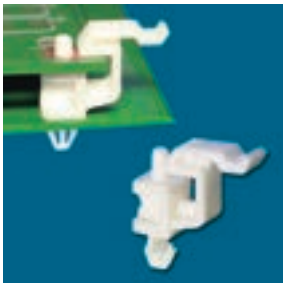

P.C. 板间隔柱 SPACER SUPPORT 3-84-1

- MATERIAL: NYLON 66(UL)
- FLAME CLASS: 94V-0/94V-2
- COLOR: NATURAL

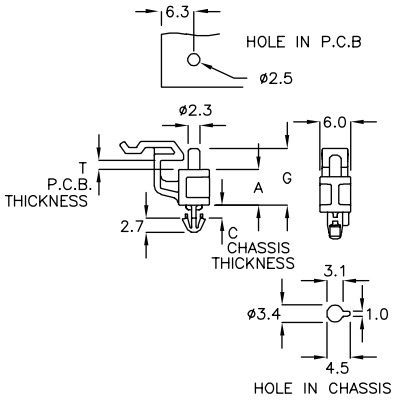

PART NO	A	G	T P.C.B THICKNESS	C CHASSIS THICKNESS	PACKAGE
LMM-6CP	6.9	11.0	1.4~1.6	2.2~2.4	1000

P.C. 板间隔柱 SPACER SUPPORT 3-84-2

- MATERIAL: NYLON 66(UL)
- FLAME CLASS: 94V-0/94V-2
- COLOR: NATURAL

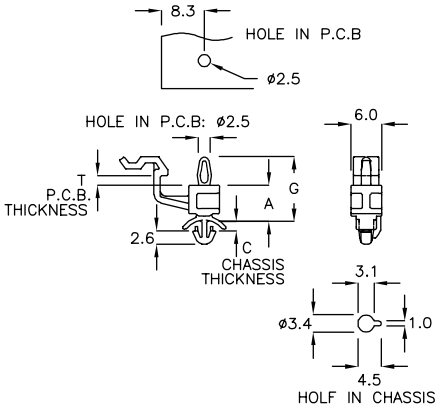

PART NO	A	G	T P.C.B THICKNESS	C CHASSIS THICKNESS	PACKAGE
LMJ-7TC	7.0	12.55	1.6	1.0~1.6	1000

P.C. 板间隔柱 SPACER SUPPORT 3-84-3

- MATERIAL: NYLON 66(UL)
- FLAME CLASS: 94V-0/94V-2
- COLOR: NATURAL

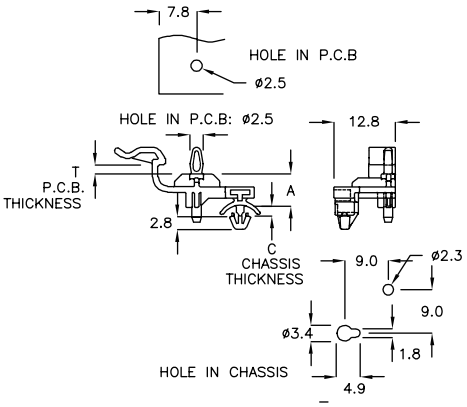

PART NO	A	T P.C.B THICKNESS	C CHASSIS THICKNESS	PACKAGE
LMX-7BK	6.7	1.6	1.0~1.6	500

P.C. 板间隔柱 SPACER SUPPORT 3-84-4

- MATERIAL: NYLON 66(UL)
- FLAME CLASS: 94V-0/94V-2
- COLOR: NATURAL

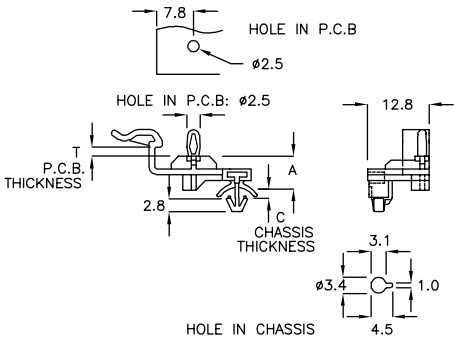

PART NO	A	T P.C.B THICKNESS	C CHASSIS THICKNESS	PACKAGE
LMX-7YD	6.7	1.6	1.0~1.6	500

返回图片索引

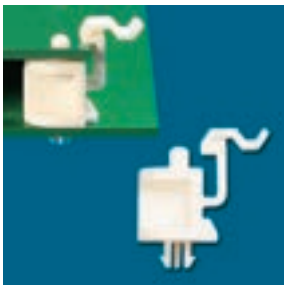

P.C. 板间隔柱 SPACER SUPPORT 3-85-1

- MATERIAL: NYLON 66(UL)
- FLAME CLASS: 94V-0/94V-2
- COLOR: NATURAL

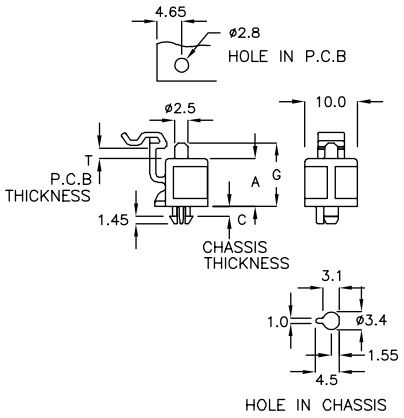

PART NO	A	G	T P.C.B. THICKNESS	C CHASSIS THICKNESS	PACKAGE
LTH-9PN	9.0	12.0	1.6~1.8	1.4~1.6	1000

P.C. 板间隔柱 SPACER SUPPORT 3-85-2

- MATERIAL: NYLON 66(UL)
- FLAME CLASS: 94V-0/94V-2
- COLOR: NATURAL

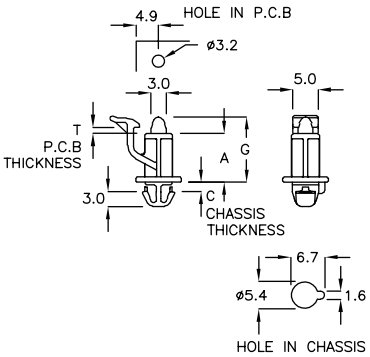

PART NO	A	G	T P.C.B THICKNESS	C CHASSIS THICKNESS	PACKAGE
LMP-9RQ	9.55	12.85	0.8~1.0	1.4~1.6	1000

P.C. 板间隔柱 SPACER SUPPORT 3-85-3

- MATERIAL: NYLON 66(UL)
- FLAME CLASS: 94V-0/94V-2
- COLOR: NATURAL,BLACK

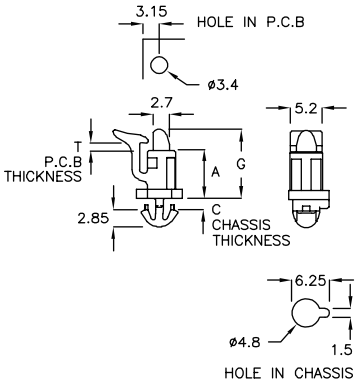

PART NO	A	G	T P.C.B THICKNESS	C CHASSIS THICKNESS	PACKAGE
LTN-7C	7.85	11.4	1.0~1.2	1.4~1.6	1000
LTN-7F	7.85	11.4	1.0~1.2	2.0~2.15	
LTN-9K	9.0	12.6	1.2~1.6	2.15	

P.C. 板间隔柱 SPACER SUPPORT 3-85-4

- MATERIAL: NYLON 66(UL)
- FLAME CLASS: 94V-0/94V-2
- COLOR: NATURAL

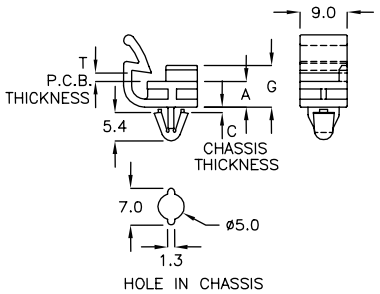

PART NO	A	G	T P.C.B. THICKNESS	C CHASSIS THICKNESS	PACKAGE
LSK-6P	4.9	7.9	1.4~1.6	0.6~0.8	500

返回图片索引

P.C. 板间隔柱 SPACER SUPPORT 3-86-1

- MATERIAL: NYLON 66(UL)
- FLAME CLASS: 94V-0/94V-2
- COLOR: NATURAL

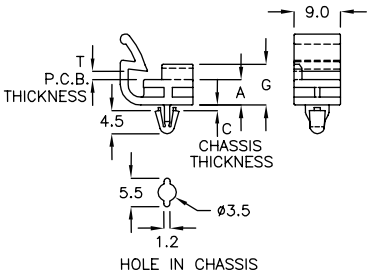

PART NO	A	G	T P.C.B. THICKNESS	C CHASSIS THICKNESS	PACKAGE
LSK-6Q	4.9	7.9	1.4~1.6	0.6~0.8	500

P.C. 板间隔柱 SPACER SUPPORT 3-86-2

- MATERIAL: NYLON 66(UL)
- FLAME CLASS: 94V-0/94V-2
- COLOR: NATURAL

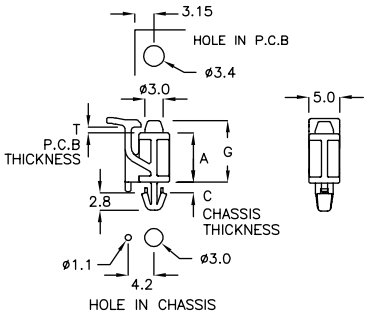

PART NO	A	G	T P.C.B THICKNESS	C CHASSIS THICKNESS	PACKAGE
LMR-08	8.0	10.0	0.6~0.8	1.4~1.6	1000

P.C. 板间隔柱 SPACER SUPPORT 3-86-3

- MATERIAL: NYLON 66(UL)
- FLAME CLASS: 94V-0/94V-2
- COLOR: BLACK

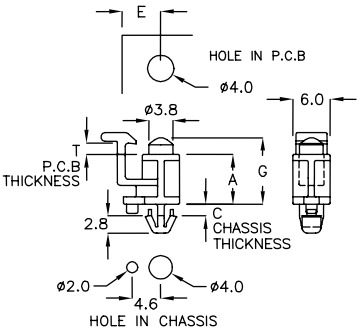

PART NO	A	G	E	T P.C.B THICKNESS	C CHASSIS THICKNESS	PACKAGE
LMQ-8HR	8.0	10.7	5.3	1.6	1.6	1000

P.C. 板间隔柱 SPACER SUPPORT 3-86-4

- MATERIAL: NYLON 66(UL)
- FLAME CLASS: 94V-0/94V-2
- COLOR: NATURAL

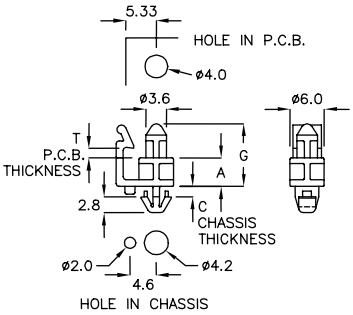

PART NO	A	G	C CHASSIS THICKNESS	T P.C.B. THICKNESS	PACKAGE
LMG-5FH	5.0	11.0	1.6	1.6	2000

返回图片索引

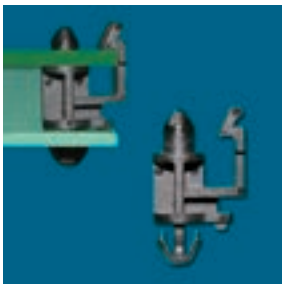

P.C. 板间隔柱 SPACER SUPPORT 3-87-1

- MATERIAL: NYLON 66(UL)
- FLAME CLASS: 94V-0/94V-2
- COLOR: BLACK

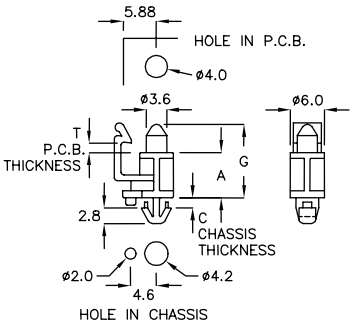

PART NO	A	G	C CHASSIS THICKNESS	T P.C.B. THICKNESS	PACKAGE
LMG-8AT	8.0	13.0	1.6	1.6	1000

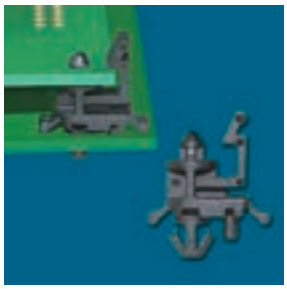

P.C. 板间隔柱 SPACER SUPPORT 3-87-2

- MATERIAL: NYLON 66(UL)
- FLAME CLASS: 94V-0/94V-2
- COLOR: BLACK

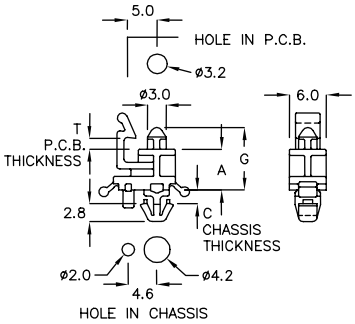

PART NO	A	G	C CHASSIS THICKNESS	T P.C.B. THICKNESS	PACKAGE
LMB-5AC	6.6	10.1	1.7~1.9	1.6	2000

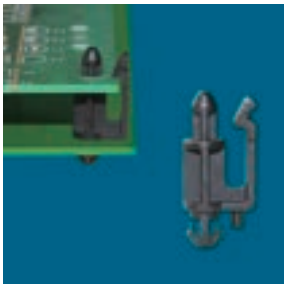

P.C. 板间隔柱 SPACER SUPPORT 3-87-3

- MATERIAL: NYLON 66(UL)
- FLAME CLASS: 94V-0/94V-2
- COLOR: BLACK

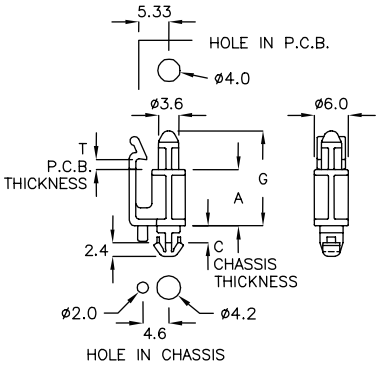

PART NO	A	G	C CHASSIS THICKNESS	T P.C.B. THICKNESS	PACKAGE
LMG-10JK	10.0	16.9	2.6	1.6	1000

P.C. 板间隔柱 SPACER SUPPORT 3-87-4

- MATERIAL: NYLON 66(UL)
- FLAME CLASS: 94V-0/94V-2
- COLOR: BLACK

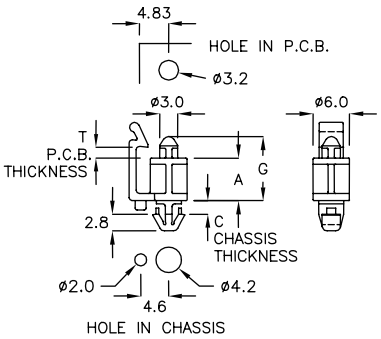

PART NO	A	G	C CHASSIS THICKNESS	T P.C.B. THICKNESS	PACKAGE
LMG-7JK	7.0	10.5	1.93	1.6	1000

P.C. 板间隔柱 SPACER SUPPORT 3-88-1

- MATERIAL: NYLON 66(UL)
- FLAME CLASS: 94V-0/94V-2
- COLOR: BLACK

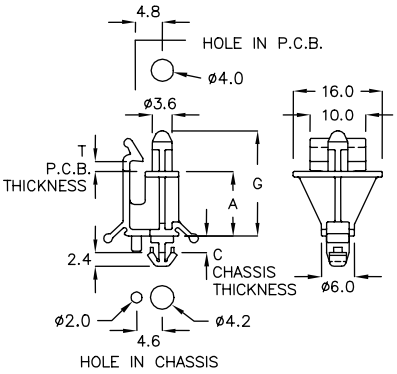

PART NO	A	G	C CHASSIS THICKNESS	T P.C.B. THICKNESS	PACKAGE
LMGA-11PS	11.6	18.9	2.6	1.6	1000

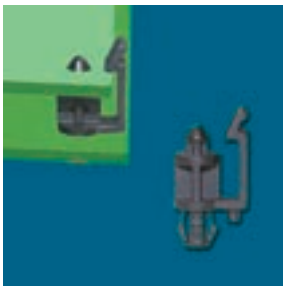

P.C. 板间隔柱 SPACER SUPPORT 3-88-2

- MATERIAL: NYLON 66(UL)
- FLAME CLASS: 94V-0/94V-2
- COLOR: BLACK

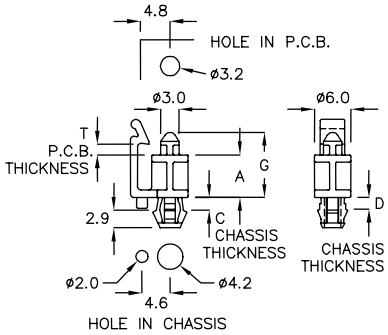

PART NO	A	G	C CHASSIS THICKNESS	D CHASSIS THICKNESS	T P.C.B. THICKNESS	PACKAGE
LMW-07	7.0	10.7	1.9	1.7	1.6	1000

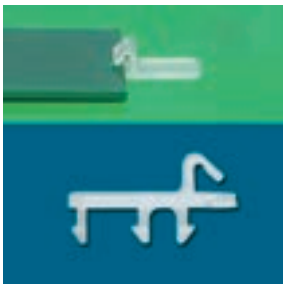

M.2 卡固定扣 SPACER SUPPORT 3-88-3

- MATERIAL: NYLON 66(UL)
- FLAME CLASS: 94V-0/94V-2
- COLOR: NATURAL

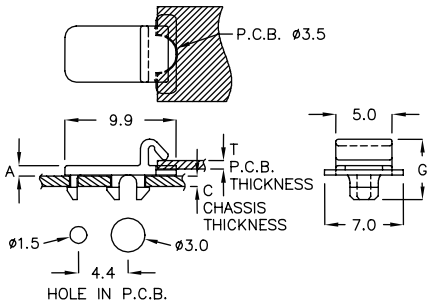

PART NO	A	G	C P.C.B. THICKNESS	T P.C.B. THICKNESS	PACKAGE
LSNT-04	0.85	5.4	1.0	0.8	1000

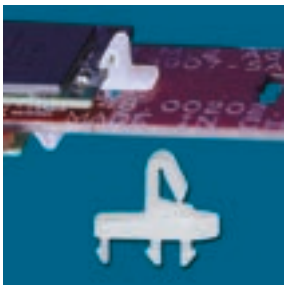

M.2 卡固定扣 SPACER SUPPORT 3-88-4

- MATERIAL: NYLON 66(UL)
- FLAME CLASS: 94V-0/94V-2
- COLOR: NATURAL

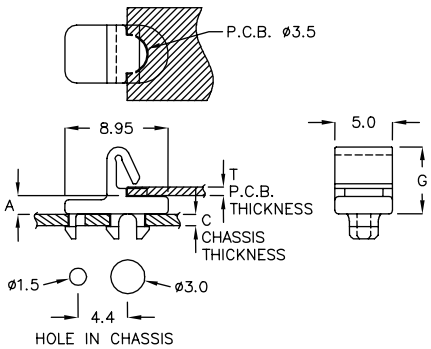

PART NO	A	G	C CHASSIS THICKNESS	T P.C.B. THICKNESS	PACKAGE
LSN-1A	1.5	5.8	1.0	0.85	2000
LSN-1XR	1.5	5.6	1.6	0.85	

返回图片索引

M.2 卡固定扣 SPACER SUPPORT 3-89-1

- MATERIAL: NYLON 66(UL)
- FLAME CLASS: 94V-0/94V-2
- COLOR: NATURAL

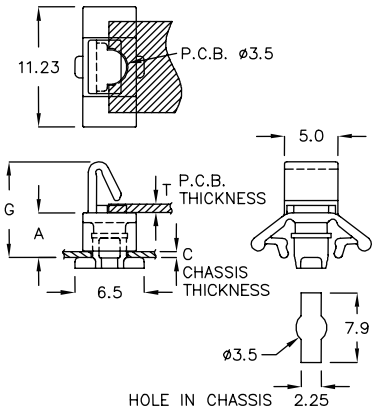

INSERT WITH 90 DEGREE ANGLE
AND PRESS DOWN

PART NO	A	G	C CHASSIS THICKNESS	T P.C.B. THICKNESS	PACKAGE
LSZ-4A	4.15	9.0	1.0~1.6	0.8	1000

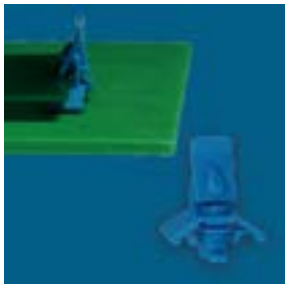

M.2 卡固定扣 SPACER SUPPORT 3-89-2

- MATERIAL: NYLON 66(UL)
- FLAME CLASS: 94V-0/94V-2
- COLOR: BLUE

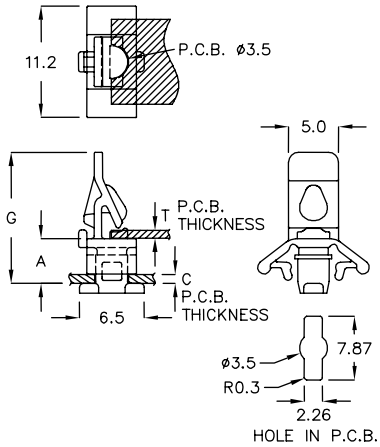

INSERT WITH 90 DEGREE ANGLE
AND PRESS DOWN

PART NO	A	G	C P.C.B. THICKNESS	T P.C.B. THICKNESS	PACKAGE
LSZQ-2GF	4.5	13.2	1.8~2.2	0.8	1000

M.2 卡固定扣 SPACER SUPPORT 3-89-3

- MATERIAL: NYLON 66(UL)
- FLAME CLASS: 94V-0/94V-2
- COLOR: NATURAL

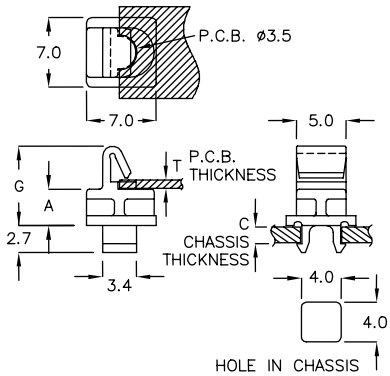

PART NO	A	G	C CHASSIS THICKNESS	T P.C.B. THICKNESS	PACKAGE
LSP-3AN	3.7	8.0	1.6	0.8	2000

M.2 卡固定扣 SPACER SUPPORT 3-89-4

- MATERIAL: NYLON 66(UL)
- FLAME CLASS: 94V-0/94V-2
- COLOR: NATURAL

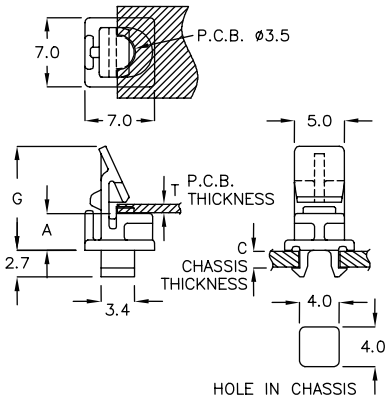

PART NO	A	G	C CHASSIS THICKNESS	T P.C.B. THICKNESS	PACKAGE
LTQ-2AR	2.5	9.3	1.6	0.8	2000
LTQ-3CP	3.7	10.5	1.6	0.8	

返回图片索引

P.C. 板间隔柱 SPACER SUPPORT 3-90-1

- MATERIAL: NYLON 66(UL)
- FLAME CLASS: 94V-0/94V-2
- COLOR: BLACK

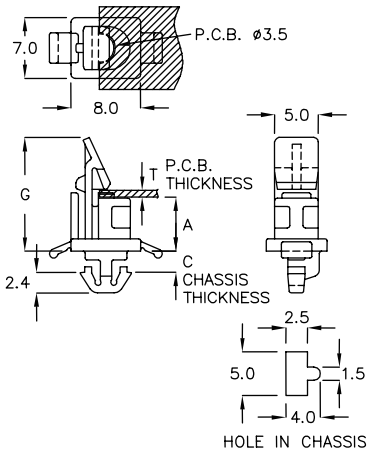

PART NO	A	G	C CHASSIS THICKNESS	T P.C.B. THICKNESS	PACKAGE
LTQR−6C	6.1	17.9	1.9	0.8	1000

M.2 卡固定扣 SPACER SUPPORT 3-90-2

- MATERIAL: NYLON 66(UL)
- FLAME CLASS: 94V-0/94V-2
- COLOR: BLACK

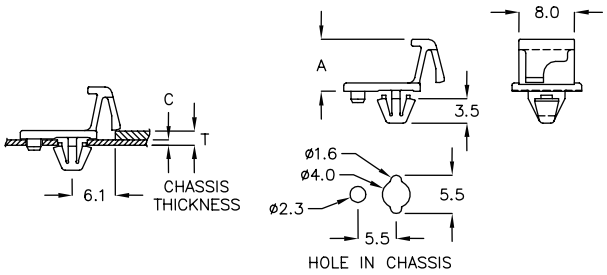

PART NO	A	C CHASSIS THICKNESS	T TOTAL THICKNESS	PACKAGE
LSR−1FM	7.5	0.8	2.1	2000

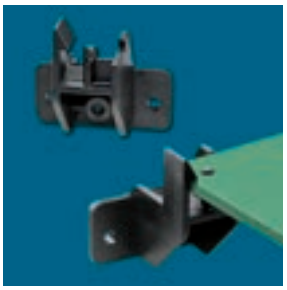

P.C. 板间隔柱 SPACER SUPPORT 3-90-3

- MATERIAL: ABS+PC(UL)
- FLAME CLASS: 94V-0
- COLOR: BLACK

PART NO	A	G	T CHASSIS THICKNESS	PACKAGE
LTRC−18	12.0	18.0	1.8	500

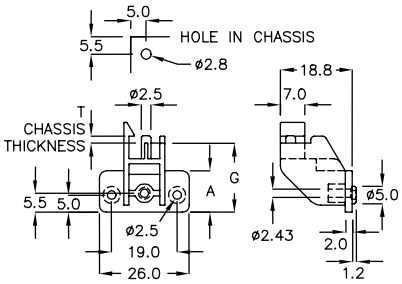

M.2 卡固定扣 M.2 CARD SNAP HOLDER 3-90-4

- MATERIAL: NYLON 66(UL)
- FLAME CLASS: 94V-0/94V-2
- COLOR: BLACK

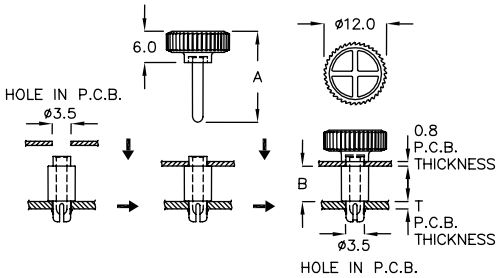

PART NO	A	B	T P.C.B. THICKNESS	PACKAGE
SRTA−3KP	17.4	6.65	1.6	500

返回图片索引

M.2 卡固定扣 M.2 CARD SNAP CLIP 3-91-1

- MATERIAL: NYLON 66(UL)
- FLAME CLASS: 94V-0/94V-2
- COLOR: BLACK

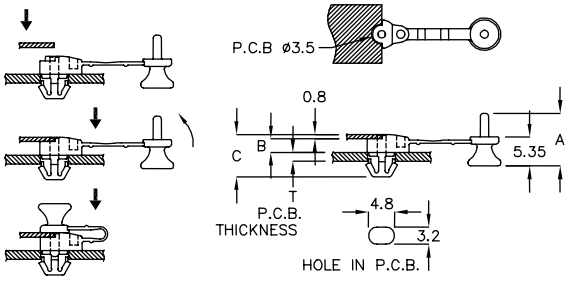

PART NO	A	B	C	T P.C.B. THICKNESS	PACKAGE
SRTC-4A	9.7	2.5	7.8	1.6	500
SRTC-4CH	9.7	2.5	8.1	2.0	1000
SRTC-4FD	10.9	2.5	9.2	3.0	

M.2 卡固定扣 M.2 CARD SNAP CLIP 3-91-2

- MATERIAL: NYLON 66(UL)
- FLAME CLASS: 94V-0/94V-2
- COLOR: BLACK

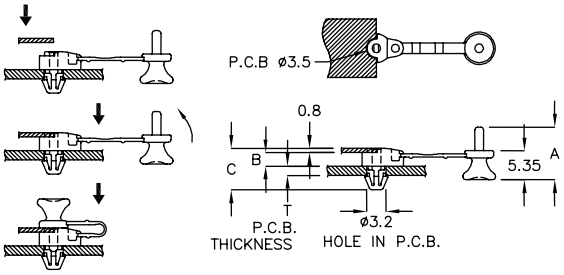

PART NO	A	B	C	T P.C.B. THICKNESS	PACKAGE
SRTH-3FG	9.7	2.5	7.65	1.6	500

M.2 卡固定扣 M.2 CARD SNAP CLIP 3-91-3

- MATERIAL: NYLON 66(UL)
- FLAME CLASS: 94V-0/94V-2
- COLOR: NATURAL

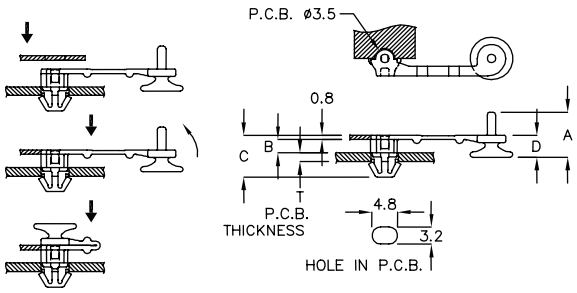

PART NO	A	B	C	D	T P.C.B. THICKNESS	PACKAGE
SRTF-4GW	8.45	2.5	7.8	4.1	1.6	500
SRTF-4RM	9.7	2.5	7.4	5.4	1.2	

M.2 卡固定扣 M.2 CARD SNAP CLIP 3-91-4

- MATERIAL: NYLON 66(UL)
- FLAME CLASS: 94V-0/94V-2
- COLOR: NATURAL

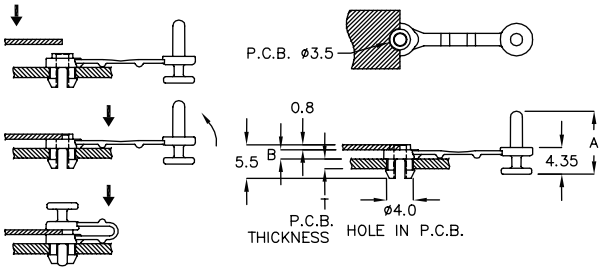

PART NO	A	B	T P.C.B. THICKNESS	PACKAGE
SRTQ-4D	10.25	1.5	1.6	500

返回图片索引

M.2 卡固定扣 M.2 CARD SNAP CLIP 3-92-1

- MATERIAL: NYLON 66(UL)
- FLAME CLASS: 94V-0/94V-2
- COLOR: NATURAL,BLACK

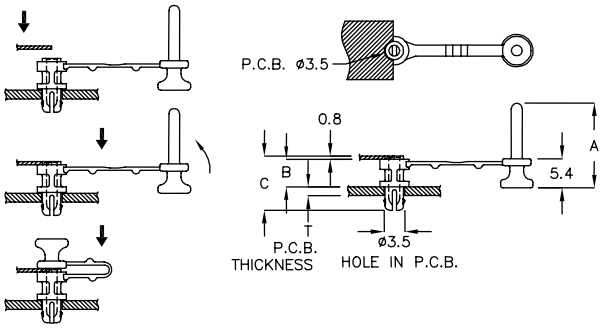

PART NO	A	B	C	T P.C.B. THICKNESS	PACKAGE
SRTK-3QM	13.05	2.5	7.6	1.6~2.2	1000
SRTK-3GP	15.6	5.05	10.15	1.6~2.2	
SRTK-3RZ	17.35	6.65	11.95	1.6~2.2	
SRTK-3FT	18.15	6.65	12.8	2.3~3.0	

M.2 卡固定扣 M.2 CARD SNAP CLIP 3-92-2

- MATERIAL: NYLON 66(UL)
- FLAME CLASS: 94V-0/94V-2
- COLOR: BLACK

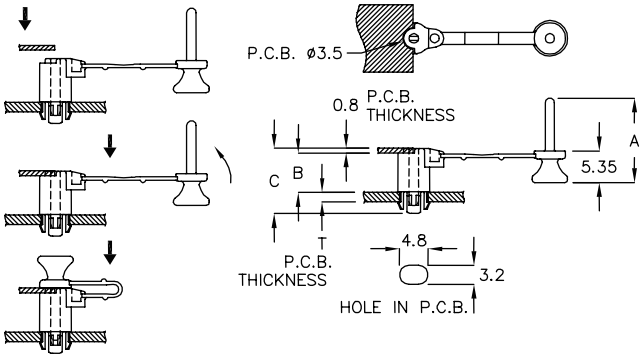

PART NO	A	B	C	T P.C.B. THICKNESS	PACKAGE
SRTY-4K	16.35	6.5	11.0	1.6	500

M.2 卡固定扣 M.2 CARD SNAP CLIP 3-92-3

- MATERIAL: NYLON 66(UL)
- FLAME CLASS: 94V-0/94V-2
- COLOR: NATURAL

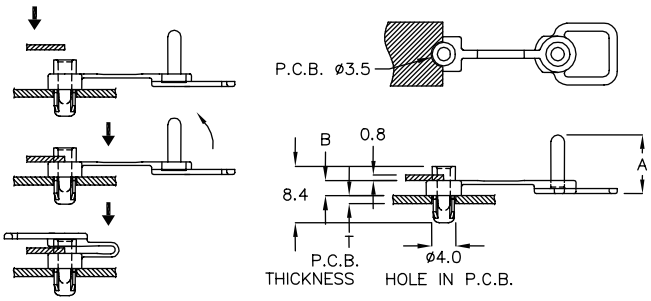

PART NO	A	B	T P.C.B. THICKNESS	PACKAGE
SRTM-4K	8.8	2.3	1.2~1.6	500

M.2 卡固定扣 M.2 CARD SNAP CLIP 3-92-4

- MATERIAL: NYLON 66(UL)
- FLAME CLASS: 94V-0/94V-2
- COLOR: NATURAL

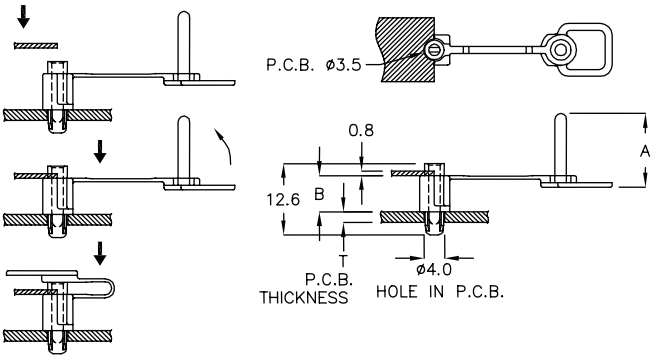

PART NO	A	B	T P.C.B. THICKNESS	PACKAGE
SRTM-4PQ	13.5	6.5	1.2~1.6	500

返回图片索引

M.2 卡固定扣 M.2 CARD SNAP CLIP ——— 3-93-1

- MATERIAL: NYLON 66(UL)
- FLAME CLASS: 94V-0/94V-2
- COLOR: BLACK

NEW

	PART NO	A	B	PACKAGE
★	SRTB-3A	ø7.0	ø5.8	500

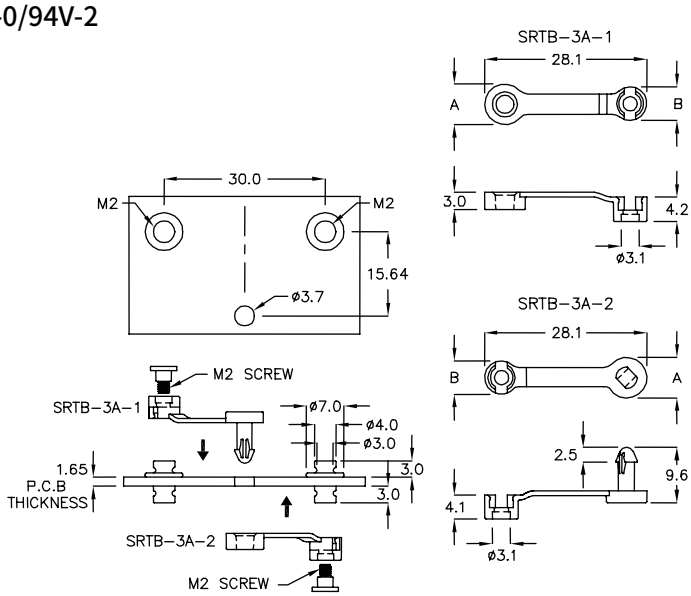

M.2 卡固定扣 M.2 CARD SNAP CLIP ——— 3-93-2

- MATERIAL: NYLON 66(UL)
- FLAME CLASS: 94V-0/94V-2
- COLOR: BLACK

INSERT WITH 90 DEGREE ANGLE
AND PRESS DOWN

PART NO	A	B	T P.C.B. THICKNESS	PACKAGE
SRTD-4YR	9.4	3.85	1.6	500

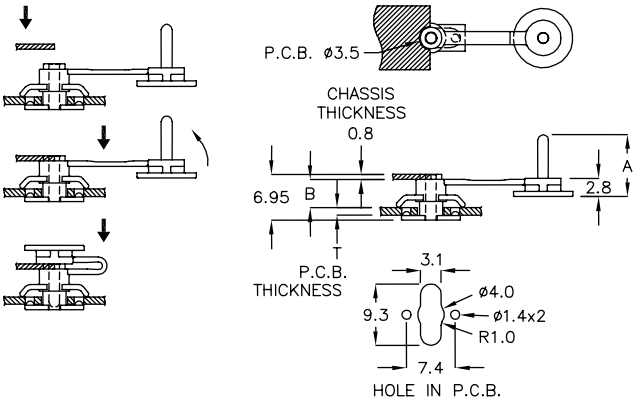

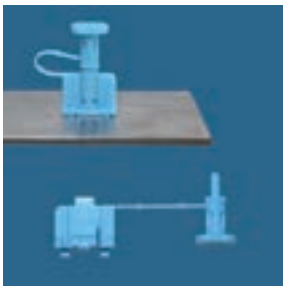

M.2 卡固定扣 M.2 CARD SNAP CLIP ——— 3-93-3

- MATERIAL: NYLON 66(UL)
- FLAME CLASS: 94V-0/94V-2
- COLOR: BLUE

NEW

	PART NO	A	B	C	T P.C.B. THICKNESS	PACKAGE
★	SRTL-12A	18.5	12.0	14.9	0.6	200

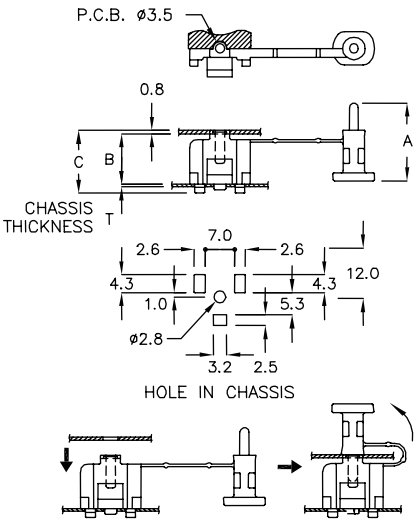

返回图片索引

M.2 卡固定扣 M.2 CARD SNAP CLIP 3-94-1

- MATERIAL: NYLON 66(UL)
- FLAME CLASS: 94V-0/94V-2
- COLOR: BLACK

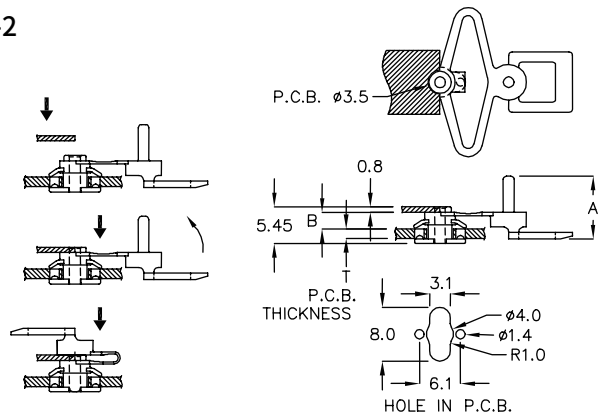

INSERT WITH 90 DEGREE ANGLE
AND PRESS DOWN

PART NO	A	B	T P.C.B. THICKNESS	PACKAGE
SRTP-4FQ	9.4	2.35	1.6	500

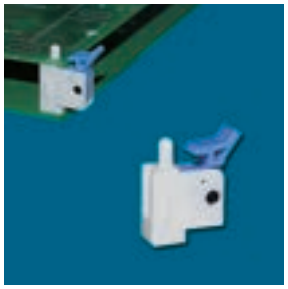

M.2 卡固定扣 M.2 CARD SNAP CLIP 3-94-2

- MATERIAL: NYLON 66(UL)
- FLAME CLASS: 94V-0/94V-2
- COLOR: NATURAL, BLUE
- USE M3 SCREW

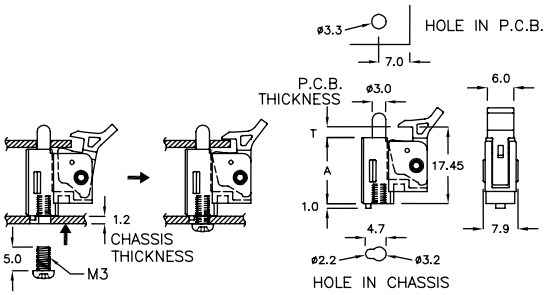

PART NO	A	T P.C.B. THICKNESS	PACKAGE
LXC-21K	15.1	1.6	200

M.2 卡固定扣 M.2 CARD SNAP CLIP 3-94-3

- MATERIAL: NYLON 66(UL)
- FLAME CLASS: 94V-0/94V-2
- COLOR: BLACK

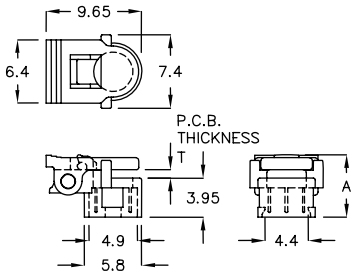

PART NO	A	T P.C.B. THICKNESS	PACKAGE
LXCG-9	6.3	0.8	500

M.2 卡固定扣 SPACER SUPPORT 3-94-4

- MATERIAL: NYLON 66(UL)
- FLAME CLASS: 94V-0/94V-2
- COLOR: NATURAL

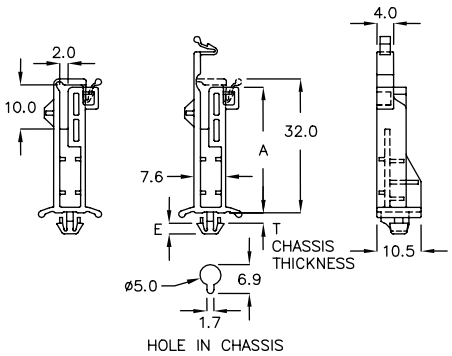

Built-In Anti-Spin Function
WITH LOCK FEATURE

PART NO	A	E	T CHASSIS THICKNESS	PACKAGE
DAG-28C	30.0	2.5	1.8~2.0	500
DAG-28TN	30.0	2.5	2.0~2.2	

返回图片索引

M.2 卡固定扣 SPACER SUPPORT 3-95-1

- MATERIAL: NYLON 66(UL)
- FLAME CLASS: 94V-0/94V-2
- COLOR: NATURAL

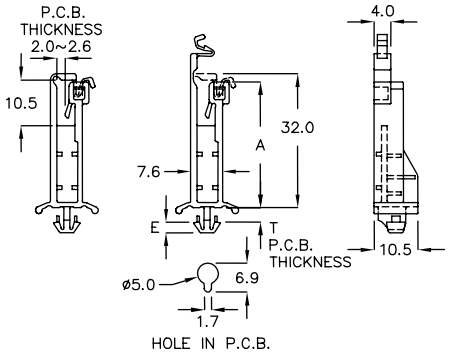

Built-In Anti-Spin Function
WITH LOCK FEATURE

PART NO	A	E	T P.C.B. THICKNESS	PACKAGE
DAGK-28	30.0	2.5	2.2~2.8	500

P.C. 板固定座 P.C.B MOUNT 3-95-2

- MATERIAL: NYLON 66(UL)
- FLAME CLASS: 94V-0/94V-2
- COLOR: NATURAL
- USE M2 SCREW

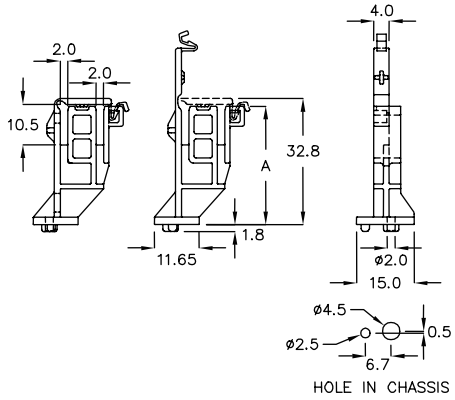

WITH LOCK FEATURE

PART NO	A	PACKAGE
DAGH-30T	30.8	200

P.C. 板间隔柱 SPACER SUPPORT 3-95-3

- MATERIAL: NYLON 66(UL)
- FLAME CLASS: 94V-0/94V-2
- COLOR: BLACK
- USE M3 TAPPING SCREW

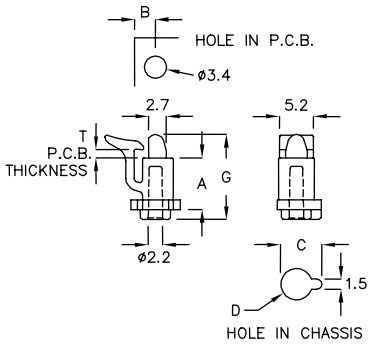

PART NO	A	B	C	D	G	T P.C.B. THICKNESS	USE TAPPING SCREW	PACKAGE
LTW-7AK	7.15	5.5	6.2	ø4.7	18.65	1.7~1.9	M3x5L	1000
LTW-7C	7.85	3.15	6.3	ø4.8	12.9	1.0~1.2	M3x6L	

P.C. 板间隔柱 SPACER SUPPORT 3-95-4

- MATERIAL: NYLON 66(UL)
- FLAME CLASS: 94V-0/94V-2
- COLOR: BLUE
- USE M3x8 TAPPING SCREW

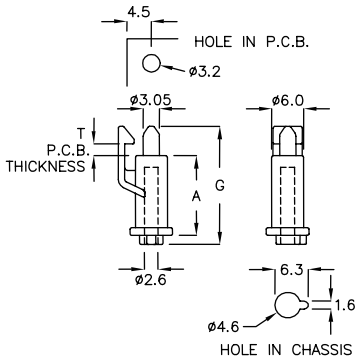

PART NO	A	G	T P.C.B. THICKNESS	PACKAGE
LTF-01	15.0	22.2	1.6~1.8	500

返回图片索引

P.C. 板间隔柱 SPACER SUPPORT 3-96-1

- MATERIAL: NYLON 66(UL)
- FLAME CLASS: 94V-0/94V-2
- COLOR: NATURAL,GREEN
- USE M3x7 TAPPING SCREW

PART NO	A	G	T P.C.B. THICKNESS	PACKAGE
LTR−13A	13.2	17.0	1.4~1.6	1000

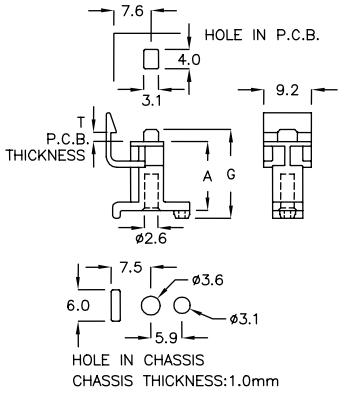

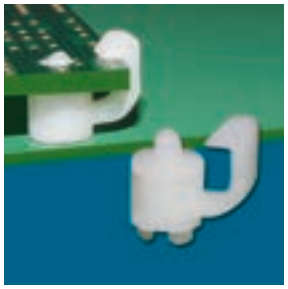

P.C. 板间隔柱 SPACER SUPPORT 3-96-2

- MATERIAL: NYLON 66(UL)
- FLAME CLASS: 94V-0/94V-2
- COLOR: NATURAL
- USE M3.5x6 TAPPING SCREW

PART NO	A	B	C CHASSIS THICKNESS	T P.C.B THICKNESS	PACKAGE
LTK−6A	6.2	ø4.0	2.0~2.3	2.8~3.0	1000
LTK−7C	7.5	ø3.3	2.5~2.7	1.6~1.85	

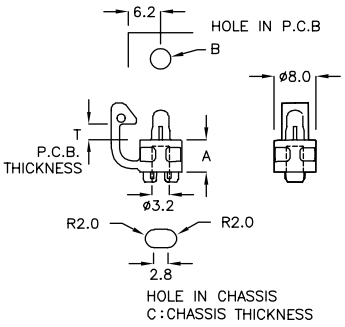

P.C. 板间隔柱 SPACER SUPPORT 3-96-3

- MATERIAL: NYLON 66(UL)
- FLAME CLASS: 94V-0/94V-2
- COLOR: NATURAL

PART NO	A	T P.C.B. THICKNESS	C MAXIMUM THICKNESS	PACKAGE
LS−3A	3.0	3.8~4.0	2.0	500

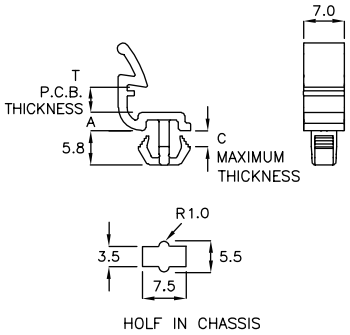

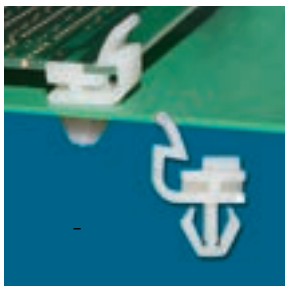

P.C. 板间隔柱 SPACER SUPPORT 3-96-4

- MATERIAL: NYLON 66(UL)
- FLAME CLASS: 94V-0/94V-2
- COLOR: NATURAL

PART NO	A	T P.C.B. THICKNESS	C MAXIMUM THICKNESS	PACKAGE
LS−4A	4.9	1.4~1.6	1.6	500

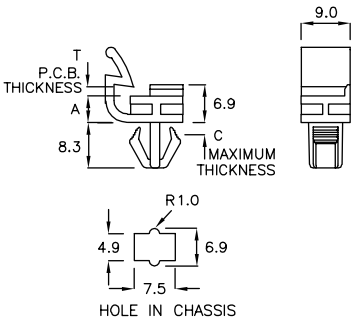

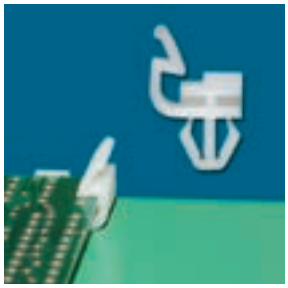

P.C. 板间隔柱 SPACER SUPPORT 3-96-5

- MATERIAL: NYLON 66(UL)
- FLAME CLASS: 94V-0/94V-2
- COLOR: NATURAL

PART NO	A	T P.C.B. THICKNESS	C MAXIMUM THICKNESS	PACKAGE
LS−4C	4.9	1.4~1.6	1.6	500

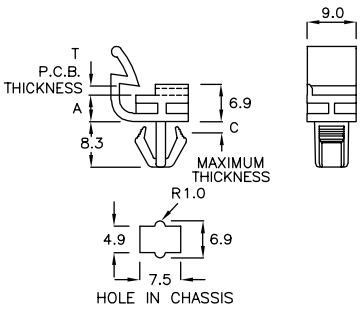

返回图片索引

P.C. 板间隔柱 SPACER SUPPORT 3-97-1

- MATERIAL: NYLON 66(UL)
- FLAME CLASS: 94V-0/94V-2
- COLOR: NATURAL

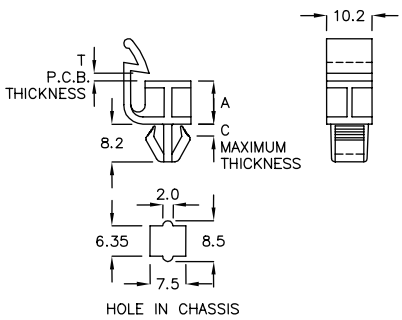

PART NO	A	C MAXIMUM THICKNESS	T P.C.B. THICKNESS	PACKAGE
LS-9A	9.0	2.0	0.8~2.2	500

P.C. 板间隔柱 SPACER SUPPORT 3-97-2

- MATERIAL: NYLON 66(UL)
- FLAME CLASS: 94V-0/94V-2
- COLOR: NATURAL

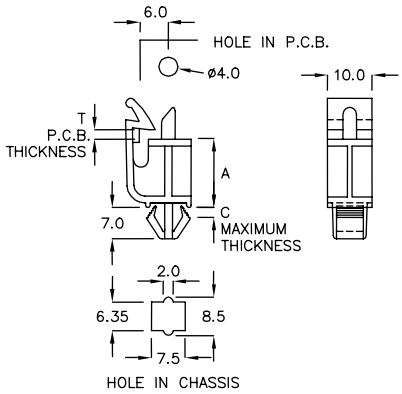

PART NO	A	C MAXIMUM THICKNESS	T P.C.B. THICKNESS	PACKAGE
LS-15	15.2	1.6	1.4~1.6	500

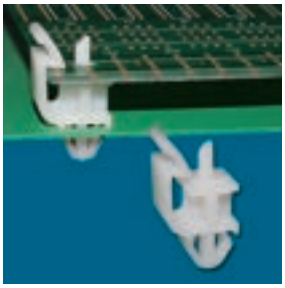

P.C. 板间隔柱 SPACER SUPPORT 3-97-3

- MATERIAL: NYLON 66(UL)
- FLAME CLASS: 94V-0/94V-2
- COLOR: NATURAL

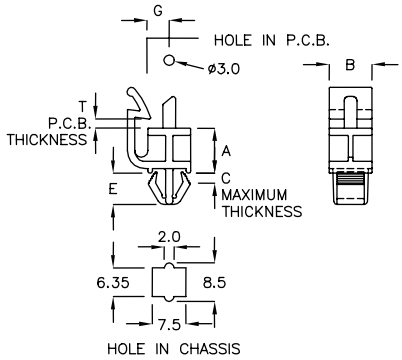

PART NO	A	B	C MAXIMUM THICKNESS	E	G	T P.C.B. THICKNESS	PACKAGE
LS-7	7.5	10.2	1.4	7.1	6.35	0.8~2.2	500
LS-10	10.0	10.1	1.4	7.1	6.35	0.8~2.2	
LS-10AN	10.0	9.5	1.6	6.9	5.35	0.8~1.6	

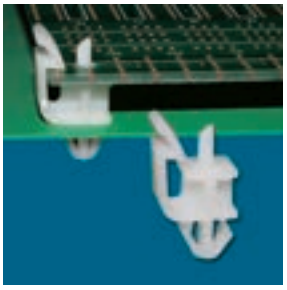

P.C. 板间隔柱 SPACER SUPPORT 3-97-4

- MATERIAL: NYLON 66(UL)
- FLAME CLASS: 94V-0/94V-2
- COLOR: NATURAL

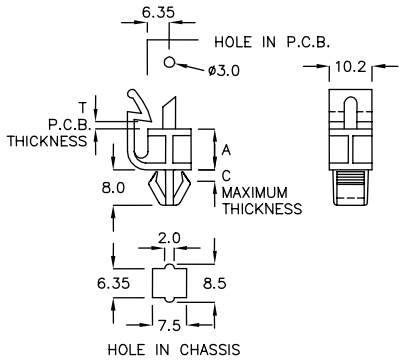

PART NO	A	C MAXIMUM THICKNESS	T P.C.B. THICKNESS	PACKAGE
LS-9	9.0	2.0	0.8~2.2	500

返回图片索引

P.C. 板间隔柱 SPACER SUPPORT 3-98-1

- MATERIAL: NYLON 66(UL)
- FLAME CLASS: 94V-0/94V-2
- COLOR: NATURAL

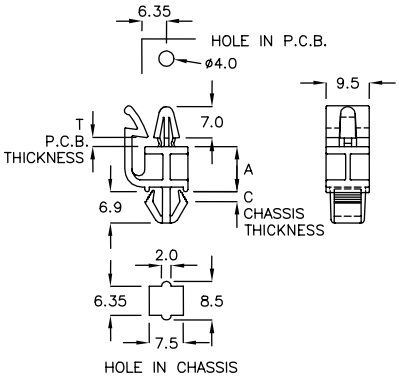

PART NO	A	C CHASSIS THICKNESS	T P.C.B. THICKNESS	PACKAGE
LSQ-10	10.0	0.8~1.6	1.6	500
LSQ-15A	15.0	0.8~1.6	1.6	

P.C. 板间隔柱 SPACER SUPPORT 3-98-2

- MATERIAL: NYLON 66(UL)
- FLAME CLASS: 94V-0/94V-2
- COLOR: NATURAL

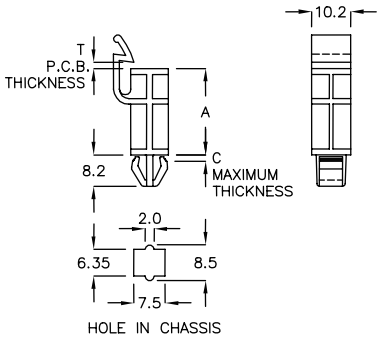

PART NO	A	C MAXIMUM THICKNESS	T P.C.B. THICKNESS	PACKAGE
LS-22A	22.5	0.8	1.4~1.6	500

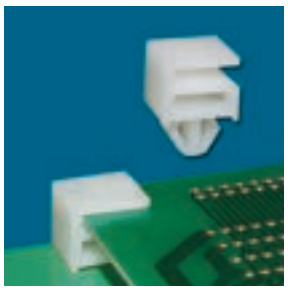

P.C. 板间隔柱 SPACER SUPPORT 3-98-3

- MATERIAL: NYLON 66(UL)
- FLAME CLASS: 94V-0/94V-2
- COLOR: NATURAL

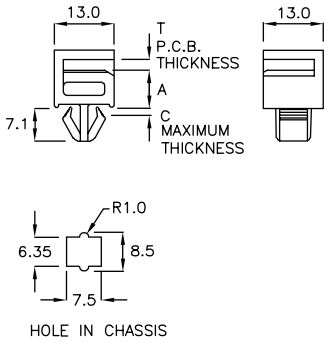

PART NO	A	T P.C.B. THICKNESS	C MAXIMUM THICKNESS	PACKAGE
LTS-7	7.5	0.8~2.2	1.4	500
LTS-10	10.0	0.8~2.2	1.4	

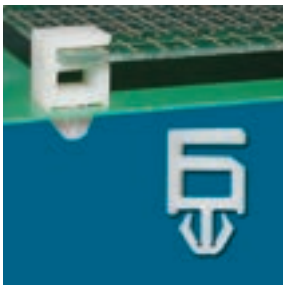

P.C. 板间隔柱 SPACER SUPPORT 3-98-4

- MATERIAL: NYLON 66(UL)
- FLAME CLASS: 94V-0/94V-2
- COLOR: NATURAL

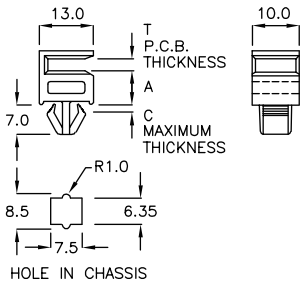

PART NO	A	T P.C.B. THICKNESS	C MAXIMUM THICKNESS	PACKAGE
LTS-10A	10.0	1.2~2.2	1.6	500

P.C. 板间隔柱 SPACER SUPPORT 3-98-5

- MATERIAL: NYLON 66(UL)
- FLAME CLASS: 94V-0/94V-2
- COLOR: NATURAL,BLUE

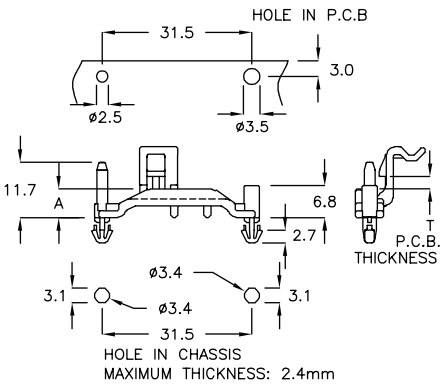

PART NO	A	T P.C.B. THICKNESS	PACKAGE
FKK-6RC	6.1	1.4~1.6	200

返回图片索引

P.C. 板间隔柱 SPACER SUPPORT 3-99-1

- MATERIAL: NYLON 66(UL)
- FLAME CLASS: 94V-0/94V-2
- COLOR: BLACK

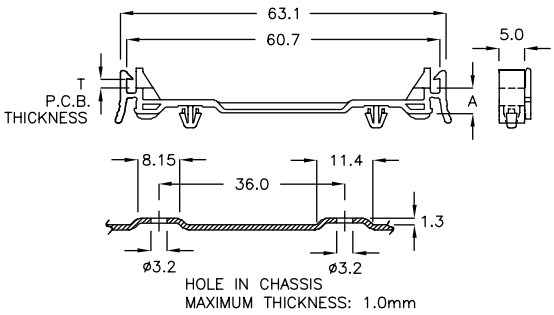

PART NO	A	T P.C.B. THICKNESS	PACKAGE
MTG-65DR	4.9	1.6	200

P.C. 板间隔柱 SPACER SUPPORT 3-99-2

- MATERIAL: NYLON 66(UL)
- FLAME CLASS: 94V-0/94V-2
- COLOR: NATURAL
- USE M2x8 TAPPING SCREW

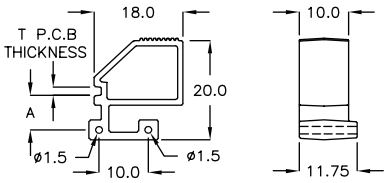

PART NO	A	T P.C.B THICKNESS	PACKAGE
LSY-07	7.0	1.4~1.6	200

P.C. 板间隔柱 SPACER SUPPORT 3-99-3

- MATERIAL: NYLON 66(UL)
- FLAME CLASS: 94V-0/94V-2
- COLOR: BLACK

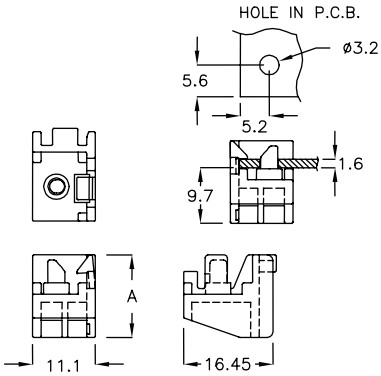

PART NO	A	PACKAGE
MTC-14A	14.65	1000

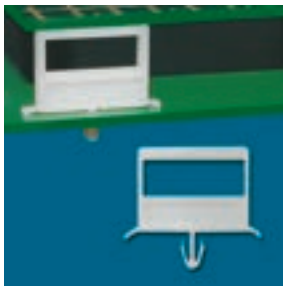

P.C. 板间隔柱 SPACER SUPPORT 3-99-4

- MATERIAL: NYLON 66(UL)
- FLAME CLASS: 94V-0/94V-2
- COLOR: NATURAL

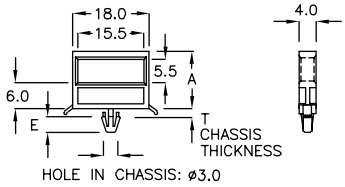

PART NO	A	T CHASSIS THICKNESS	E	PACKAGE
LD-13	13.3	1.2~1.6	3.8	500

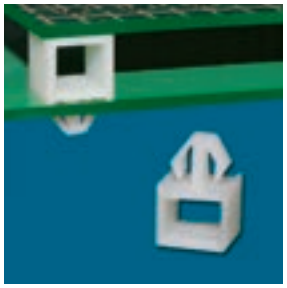

P.C. 板间隔柱 SPACER SUPPORT 3-99-5

- MATERIAL: NYLON 66(UL)
- FLAME CLASS: 94V-0/94V-2
- COLOR: NATURAL

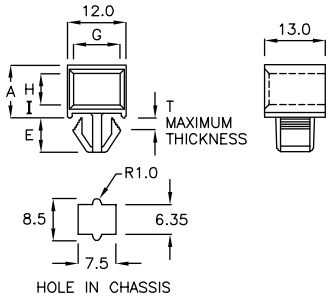

PART NO	A	E	G	H	I	T MAXIMUM THICKNESS	PACKAGE
LW-10	10.6	7.1	9.4	6.3	2.65	1.8	200
LW-012	12.7	7.1	9.2	8.2	2.75	1.8	
LW-013	12.5	6.4	9.1	8.2	2.5	1.4	

返回图片索引

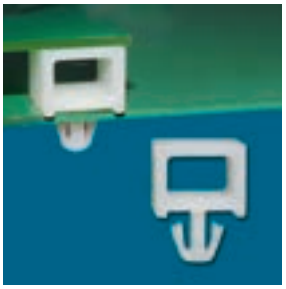

P.C. 板间隔柱 SPACER SUPPORT 3-100-1

- MATERIAL: NYLON 66(UL)
- FLAME CLASS: 94V-0/94V-2
- COLOR: NATURAL

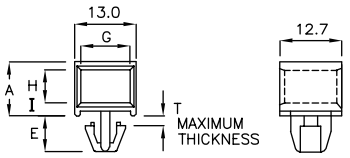

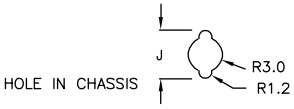

PART NO	A	E	G	H	I	J	T MAXIMUM THICKNESS	PACKAGE
LD−10A	10.6	7.2	9.5	6.1	2.5	8.4	1.6	500
LD−12C	12.6	7.1	9.1	8.2	2.65	9.4	1.6	

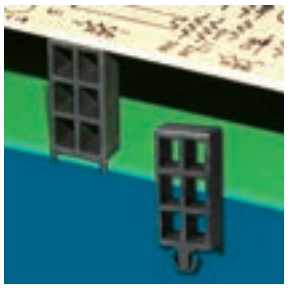

P.C. 板间隔柱 SPACER SUPPORT 3-100-2

- MATERIAL: NYLON 66(UL)
- FLAME CLASS: 94V-0/94V-2
- COLOR: BLACK

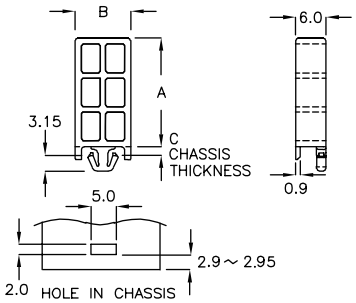

PART NO	A	B	C CHASSIS THICKNESS	PACKAGE
LWC−21A	21.5	11.0	1.4～1.6	500

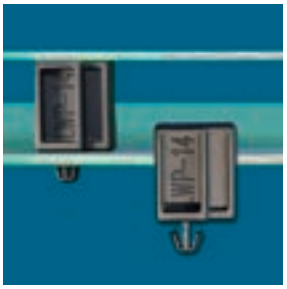

P.C. 板间隔柱 SPACER SUPPORT 3-100-3

- MATERIAL: NYLON 66(UL)
- FLAME CLASS: 94V-0/94V-2
- COLOR: NATURAL,BLACK

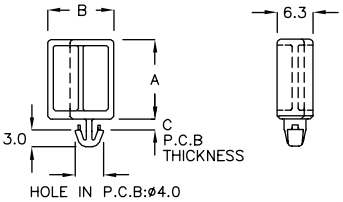

PART NO	A	B	C P.C.B THICKNESS	PACKAGE
LWP−14	14.0	11.7	1.7	500

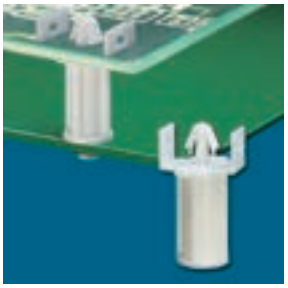

P.C. 板间隔柱 SPACER SUPPORT 3-100-4

- MATERIAL: NYLON 66(UL)
- FLAME CLASS: 94V-0/94V-2
- COLOR: NATURAL
- USE M3x8 TAPPING SCREW

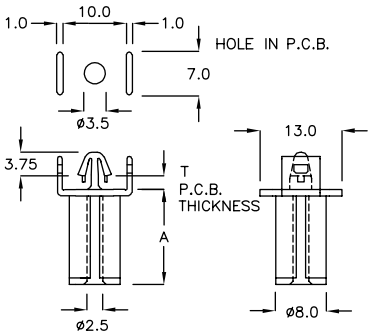

PART NO	A	T P.C.B. THICKNESS	PACKAGE
LSL−15	15.0	1.8～1.95	500

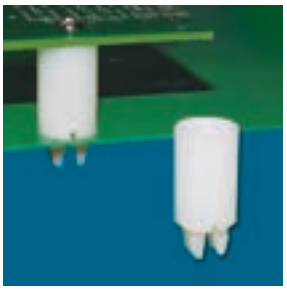

P.C. 板间隔柱 SPACER SUPPORT 3-100-5

- MATERIAL: NYLON 66(UL)
- FLAME CLASS: 94V-0/94V-2
- COLOR: NATURAL
- USE #6-32 UNC STANDARD TAPPING SCREW

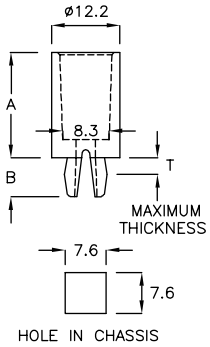

PART NO	A	B	T MAXIMUM THICKNESS	PACKAGE
TS−18	18.8	7.0	2.2	500

返回图片索引

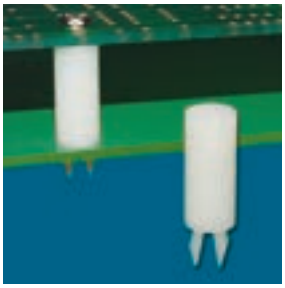

P.C. 板间隔柱 SPACER SUPPORT 3-101-1

- MATERIAL: NYLON 66(UL)
- FLAME CLASS: 94V-0/94V-2
- COLOR: NATURAL
- USE M3x22 STANDARD TAPPING SCREW

PART NO	A	B	T MAXIMUM THICKNESS	PACKAGE
TSA−16	15.9	5.5	1.6	200

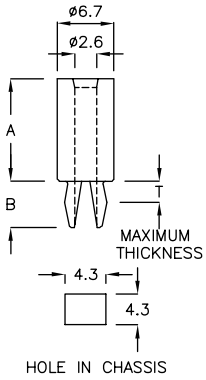

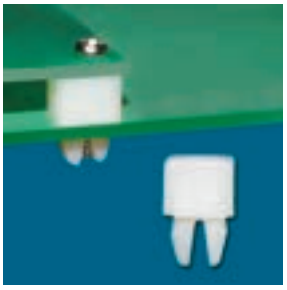

P.C. 板间隔柱 SPACER SUPPORT 3-101-2

- MATERIAL: NYLON 66(UL)
- FLAME CLASS: 94V-0/94V-2
- COLOR: NATURAL
- USE #6-32 UNC STANDARD TAPPING SCREW

PART NO	A	B	C	T MAXIMUM THICKNESS	PACKAGE
TB−6A	1.0	7.0	9.5	2.2	1000
TB−6	1.3	7.0	9.5	2.2	
TB−7	7.6	7.1	9.4	2.2	500

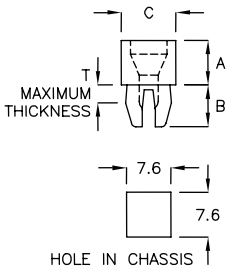

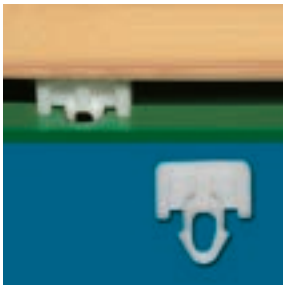

P.C. 板间隔柱 SPACER SUPPORT 3-101-3

- MATERIAL: NYLON 66(UL)
- FLAME CLASS: 94V-0/94V-2
- COLOR: NATURAL

PART NO	A	T MAXIMUM THICKNESS	PACKAGE
LWH−3K	3.7	1.0	2000
LWH−5C	5.2	1.0	500

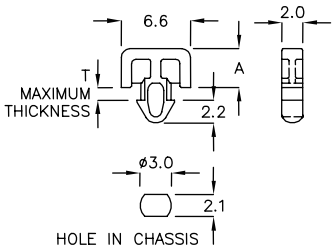

P.C. 板间隔柱 SPACER SUPPORT 3-101-4

- MATERIAL: NYLON 66(UL)
- FLAME CLASS: 94V-0/94V-2
- COLOR: NATURAL
- USE M2.5 STANDARD TAPPING SCREW

PART NO	A	B	T MAXIMUM THICKNESS	PACKAGE
TSC−4A	4.5	5.4	2.3	1000

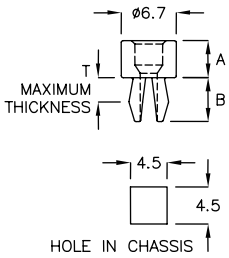

P.C. 板间隔柱 SPACER SUPPORT 3-101-5

- MATERIAL: PC(UL)
- COLOR: NATURAL
- USE M3 STANDARD TAPPING SCREW

PART NO	A	B	T MAXIMUM THICKNESS	PACKAGE
TSC−4DK	4.5	5.4	2.3	1000

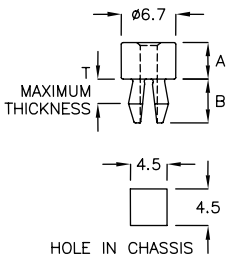

返回图片索引

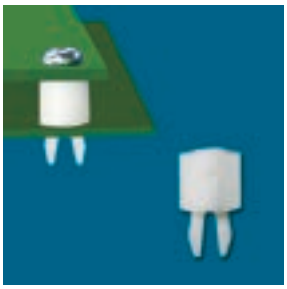

P.C. 板间隔柱 SPACER SUPPORT 3-102-1

- MATERIAL: NYLON 66(UL)
- FLAME CLASS: 94V-0/94V-2
- COLOR: NATURAL
- USE M2.5 STANDARD TAPPING SCREW

PART NO	A	B	T MAXIMUM THICKNESS	PACKAGE
TSD-6M	6.4	4.9	1.6	1000

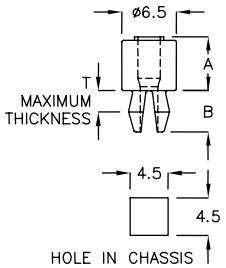

P.C. 板间隔柱 SPACER SUPPORT 3-102-2

- MATERIAL: NYLON 66(UL)
- FLAME CLASS: 94V-0/94V-2
- COLOR: NATURAL
- USE M4x10 STANDARD TAPPING SCREW

PART NO	A	T MAXIMUM THICKNESS	PACKAGE
TB-10	5.0	1.0	500
TB-10A	3.0	1.0	
TB-10C	0.8	1.0	

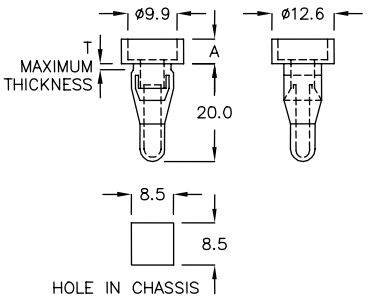

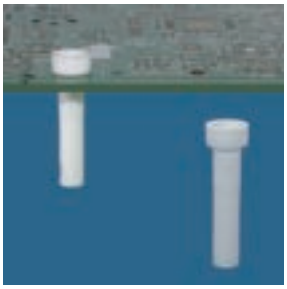

P.C. 板间隔柱 SPACER SUPPORT 3-102-3

- MATERIAL: NYLON 66(UL)
- FLAME CLASS: 94V-0/94V-2
- COLOR: NATURAL

PART NO	A	B	T P.C.B. THICKNESS	PACKAGE
RMF-22	3.8	23.6	1.3~1.5	1000

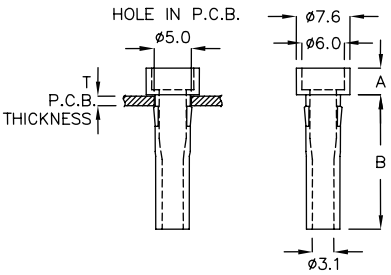

固定座 MOUNT 3-102-4

- MATERIAL: NYLON 66(UL)
- FLAME CLASS: 94V-0/94V-2
- COLOR: NATURAL

PART NO	A	B	PACKAGE
RMF-21A	21.4	23.0	500
RMF-25A	25.9	27.5	
RMF-27A	27.7	29.3	
RMF-32A	32.3	34.4	

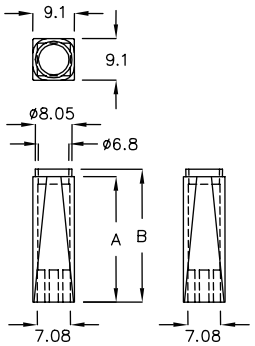

固定座 MOUNT 3-102-5

- MATERIAL: NYLON 66(UL)
- FLAME CLASS: 94V-0/94V-2
- COLOR: NATURAL

PART NO	A	B	C	PACKAGE
RMT-26A	26.4	29.2	6.94	500

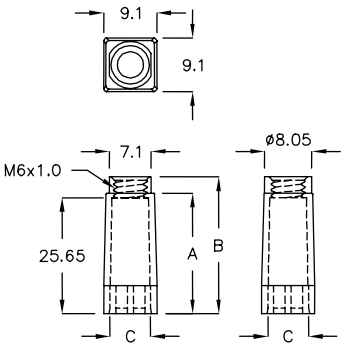

返回图片索引

固定座 MOUNT 3-103-1

- MATERIAL: NYLON 66(UL)
- FLAME CLASS: 94V-0/94V-2
- COLOR: NATURAL

PART NO	A	B	C	PACKAGE
RMG-26C	26.4	29.2	9.9	500

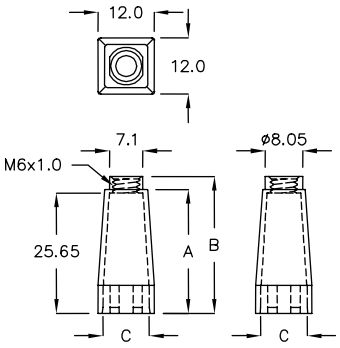

固定座 MOUNT 3-103-2

- MATERIAL: NYLON 66(UL)
- FLAME CLASS: 94V-0/94V-2
- COLOR: NATURAL

PART NO	A	B	PACKAGE
RMJ-7FS	7.9	10.8	500

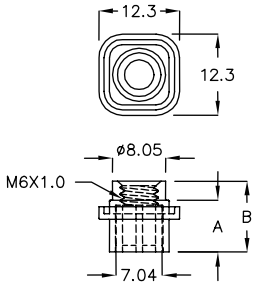

固定座 MOUNT 3-103-3

- MATERIAL: NYLON 66(UL)
- FLAME CLASS: 94V-0/94V-2
- COLOR: NATURAL

PART NO	A	B	PACKAGE
RMK-7WR	7.9	10.8	500

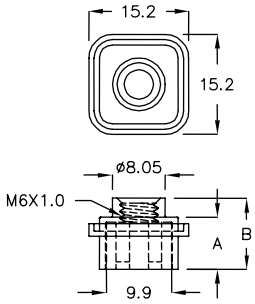

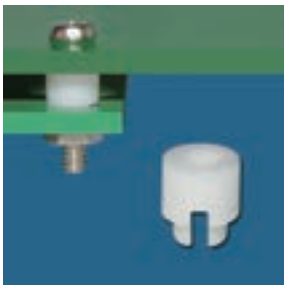

圆体间隔柱 SPACER SUPPORT 3-103-4

- MATERIAL: NYLON 66(UL)
- FLAME CLASS: 94V-0/94V-2
- COLOR: NATURAL

PART NO	A	B	C	T P.C.B. THICKNESS	PACKAGE
ADW-3T	3.05	ø1.95	ø4.0	1.6	2000

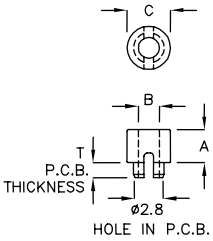

圆体间隔柱 SPACER SUPPORT 3-103-5

- MATERIAL: NYLON 66(UL)
- FLAME CLASS: 94V-0/94V-2
- COLOR: NATURAL

PART NO	A	B	C	PACKAGE
AD-012	12.0	ø3.0	ø7.0	500
AD-12A	12.5	ø3.2	ø7.0	

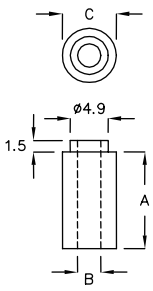

返回图片索引

圆体间隔柱 SPACER SUPPORT 3-104-1

- MATERIAL: NYLON 66(UL)
- FLAME CLASS: 94V-0/94V-2
- COLOR: NATURAL

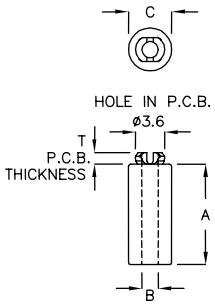

PART NO	A	B	C	T P.C.B. THICKNESS	PACKAGE
ADK-13	13.0	ø2.1	ø5.6	1.6	1000

圆体间隔柱 SPACER SUPPORT 3-104-2

- MATERIAL: NYLON 66(UL)
- FLAME CLASS: 94V-0/94V-2
- COLOR: NATURAL

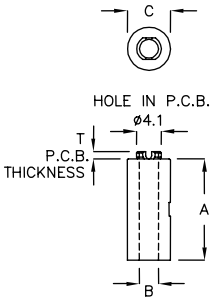

PART NO	A	B	C	T P.C.B. THICKNESS	PACKAGE
ADH-06C	6.3	ø3.25	ø7.4	1.4~1.6	1000
ADH-17	17.1	ø3.2	ø7.45	1.4~1.6	500
ADH-19T	19.1	ø3.25	ø7.4	1.4~1.6	

圆体间隔柱 SPACER SUPPORT 3-104-3

- MATERIAL: NYLON 66(UL)
- FLAME CLASS: 94V-0/94V-2
- COLOR: NATURAL

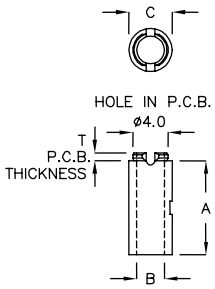

PART NO	A	B	C	T P.C.B. THICKNESS	PACKAGE
ADP-20A	20.0	ø3.2	ø5.0	1.0~1.2	500

圆体间隔柱 SPACER SUPPORT 3-104-4

- MATERIAL: NYLON 66(UL)
- FLAME CLASS: 94V-0/94V-2
- COLOR: NATURAL

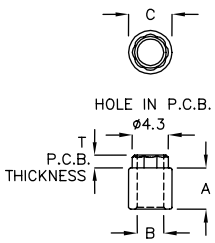

PART NO	A	B	C	T P.C.B. THICKNESS	PACKAGE
ADQ-05	5.0	ø3.2	ø5.2	1.6~1.8	2000

返回图片索引

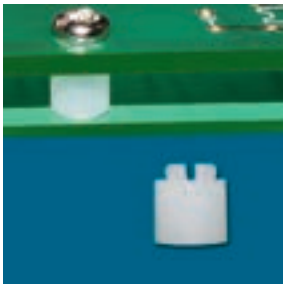

圆体间隔柱 SPACER SUPPORT 3-105-1

- MATERIAL: NYLON 66(UL)
- FLAME CLASS: 94V-0/94V-2
- COLOR: NATURAL

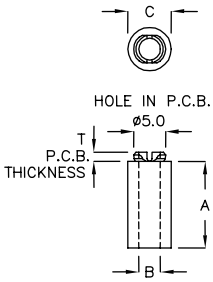

PART NO	A	B	C	T P.C.B. THICKNESS	PACKAGE
ADF−2M	2.5	ø3.5	ø7.0	1.6~1.8	1000
ADF−03	3.0	ø3.5	ø7.0	1.6~1.8	
ADF−3M	3.5	ø3.5	ø7.0	1.6~1.8	
ADF−04	4.0	ø3.5	ø7.0	1.6~1.8	
ADF−4M	4.5	ø3.5	ø7.0	1.6~1.8	
ADF−05	5.0	ø3.5	ø7.0	1.6~1.8	
ADF−5M	5.5	ø3.5	ø7.0	1.6~1.8	
ADF−06	6.0	ø3.5	ø7.0	1.6~1.8	
ADF−6M	6.5	ø3.5	ø7.0	1.6~1.8	
ADF−07	7.0	ø3.5	ø7.0	1.6~1.8	
ADF−7M	7.5	ø3.5	ø7.0	1.6~1.8	
ADF−08	8.0	ø3.5	ø7.0	1.6~1.8	
ADF−8M	8.5	ø3.5	ø7.0	1.6~1.8	
ADF−09	9.0	ø3.5	ø7.0	1.6~1.8	
ADF−10	10.0	ø3.5	ø7.0	1.6~1.8	
ADF−11	11.0	ø3.5	ø7.0	1.6~1.8	
ADF−17RM	17.5	ø3.5	ø7.0	1.6~1.8	500
ADF−22KC	22.0	ø3.5	ø7.0	1.6~1.8	

P.C. 板间隔柱 SPACER SUPPORT 3-105-2

- MATERIAL: NYLON 66(UL)
- FLAME CLASS: 94V-0/94V-2
- COLOR: NATURAL

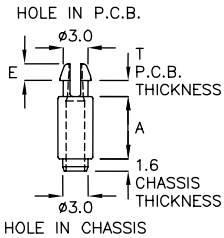

PART NO	A	E	T P.C.B. THICKNESS	USE SCREW	PACKAGE
MCJA−04	4.0	1.9	1.4~1.6	M2.0x12L	2000
MCJA−05	5.0	1.9	1.4~1.6	M2.0x12L	
MCJA−06	6.0	1.9	1.4~1.6	M2.0x14L	
MCJA−07	7.0	1.9	1.4~1.6	M2.0x14L	

P.C. 板间隔柱 SPACER SUPPORT 3-105-3

- MATERIAL: NYLON 66(UL)
- FLAME CLASS: 94V-0/94V-2
- COLOR: NATURAL
- USE M2.5 SCREW

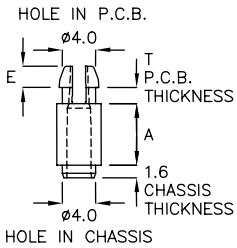

PART NO	A	E	T P.C.B. THICKNESS	USE SCREW	PACKAGE
MCJ−03A	3.0	2.4	1.4~1.6	M2.5x10L	2000
MCJ−04A	4.0	2.4	1.4~1.6	M2.5x12L	
MCJ−05A	5.0	2.4	1.4~1.6	M2.5x12L	
MCJ−06A	6.0	2.4	1.4~1.6	M2.5x14L	
MCJ−07	7.0	2.4	1.4~1.6	M2.5x14L	

P.C. 板间隔柱 SPACER SUPPORT 3-106-1

- MATERIAL: NYLON 66(UL)
- FLAME CLASS: 94V-0/94V-2
- COLOR: NATURAL

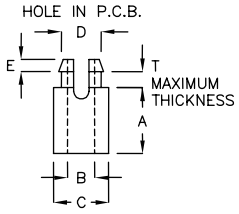

PART NO	A	B	C	D HOLE IN P.C.B.	E	T MAXIMUM THICKNESS	PACKAGE
SRS2-2C	2.0	ø2.1	ø4.0	ø3.0	1.0	1.6	2000
SRS2-2A	2.5	ø2.1	ø4.0	ø3.0	1.0	1.6	
SRS2-2M	2.5	ø2.7	ø5.5	ø4.0	1.5	1.7	
SRS2-3	3.0	ø2.7	ø5.5	ø4.0	1.55	1.7	
SRS2-3GK	3.5	ø2.7	ø5.5	ø4.0	1.4	1.7	
SRS2-4	4.0	ø2.7	ø5.5	ø4.0	1.5	1.7	
SRS2-4AC	4.0	ø2.1	ø4.0	ø3.0	1.0	1.6	
SRS2-4CB	4.5	ø2.7	ø5.5	ø4.0	1.4	1.7	
SRS2-5	5.0	ø2.7	ø5.5	ø4.0	1.5	1.7	
SRS2-5ZM	5.5	ø2.7	ø5.5	ø4.0	1.4	1.7	
SRS2-6	6.0	ø2.7	ø5.5	ø4.0	1.5	1.7	
SRS2-6A	6.35	ø2.25	ø4.54	ø3.55	1.0	1.1	
SRS2-8	8.0	ø2.7	ø5.5	ø4.0	1.4	1.6	
SRS2-15	15.0	ø3.1	ø5.5	ø4.0	1.55	1.6	500
SRS3-2MA	2.0	ø3.2	ø6.4	ø4.8	1.5	1.2	2000
SRS3-3S	2.7	ø3.2	ø6.5	ø4.8	1.6	1.7	
SRS3-3A	3.0	ø2.8	ø5.5	ø4.0	1.4	1.6	
SRS3-3M	3.0	ø3.2	ø6.5	ø4.8	1.7	1.7	
SRS3-3	3.5	ø3.2	ø6.4	ø4.8	1.4	1.7	
SRS3-4	4.0	ø3.2	ø6.5	ø4.8	1.65	1.7	
SRS3-4A	4.5	ø3.4	ø6.5	ø4.8	1.8	1.6	
SRS3-5	5.0	ø3.2	ø6.5	ø4.8	1.6	1.7	
SRS3-6S	6.1	ø3.2	ø6.5	ø4.8	1.6	1.7	1000
SRS3-6	6.5	ø3.2	ø6.4	ø4.8	1.6	1.7	
SRS3-7S	7.0	ø3.2	ø6.5	ø4.8	1.6	1.7	
SRS3-7F	7.4	ø3.2	ø6.5	ø4.8	1.7	1.7	
SRS3-7	7.7	ø3.2	ø6.5	ø4.8	1.7	1.7	
SRS3-8	8.0	ø3.2	ø6.5	ø4.8	1.6	1.7	
SRS3-9	9.0	ø3.2	ø6.5	ø4.8	1.8	1.7	
SRS3-10M	10.5	ø3.15	ø6.5	ø4.8	1.6	1.7	
SRS3-12A	12.7	ø3.2	ø6.5	ø4.8	1.6	1.7	500
SRS3-14	14.2	ø3.2	ø6.5	ø4.8	1.7	1.7	
SRS4-6	6.4	ø3.9	ø6.9	ø6.0	1.6	1.7	1000
SRS4-12S	12.0	ø3.9	ø6.9	ø6.0	1.6	1.7	500
SRS4-12	12.7	ø3.9	ø6.9	ø6.0	1.7	1.7	

P.C. 板间隔柱 SPACER SUPPORT 3-106-2

- MATERIAL: NYLON 66(UL)
- FLAME CLASS: 94V-0/94V-2
- COLOR: NATURAL

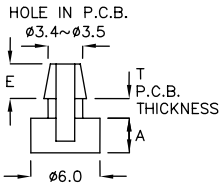

PART NO	A	E	T P.C.B. THICKNESS	PACKAGE
PCBS-3	3.0	3.0	1.4~1.6	2000
PCBS-3M	3.5	3.0	1.4~1.6	
PCBS-4	4.0	3.0	1.4~1.6	
PCBS-4M	4.5	3.0	1.4~1.6	
PCBS-5	5.0	3.0	1.4~1.6	

返回图片索引

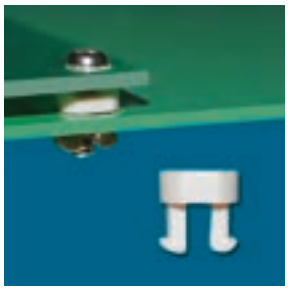

P.C. 板间隔柱 SPACER SUPPORT 3-107-1

- MATERIAL: NYLON 66(UL)
- FLAME CLASS: 94V-0/94V-2
- COLOR: NATURAL

PART NO	A	B	T MAXIMUM THICKNESS	PACKAGE
SSR-2A	2.65	ø5.2	2.6	2000

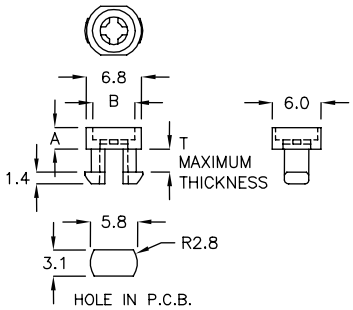

圆体间隔柱 SPACER SUPPORT 3-107-2

- MATERIAL: NYLON 66(UL)
- FLAME CLASS: 94V-0/94V-2
- COLOR: NATURAL

PART NO	A	B	C	T P.C.B. THICKNESS	PACKAGE
ADJ-2CH	2.9	3.9	ø6.0	0.8~1.6	2000
ADJ-3FQ	3.4	4.4	ø6.0	0.8~1.6	

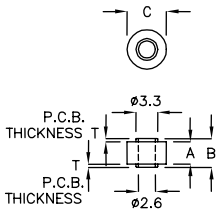

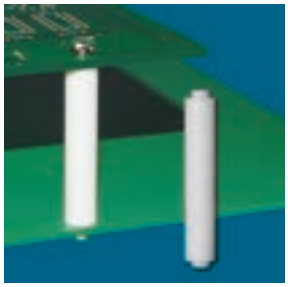

圆体间隔柱 SPACER SUPPORT 3-107-3

- MATERIAL: NYLON 66(UL)
- FLAME CLASS: 94V-0/94V-2
- COLOR: NATURAL

PART NO	A	B	C	T P.C.B. THICKNESS	PACKAGE
AD-35A	35.4	38.4	ø7.0	1.6~1.8	500

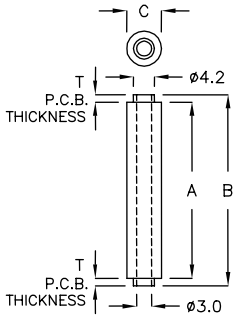

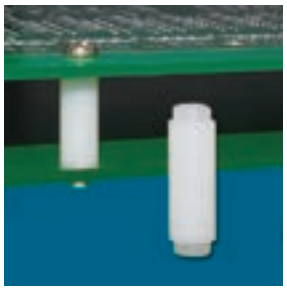

圆体间隔柱 SPACER SUPPORT 3-107-4

- MATERIAL: NYLON 66(UL)
- FLAME CLASS: 94V-0/94V-2
- COLOR: NATURAL

PART NO	A	B	D	T P.C.B. THICKNESS	PACKAGE
ADA-15	15.0	ø3.5	ø4.8	2.2~2.4	1000

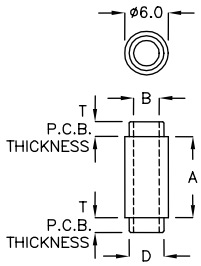

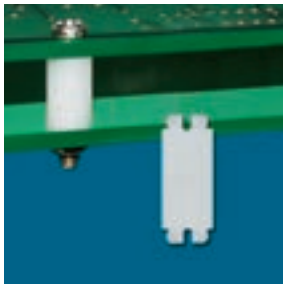

圆体间隔柱 SPACER SUPPORT 3-107-5

- MATERIAL: NYLON 66(UL)
- FLAME CLASS: 94V-0/94V-2
- COLOR: NATURAL

PART NO	A	B	C	T P.C.B. THICKNESS	PACKAGE
ADHM-14	14.0	ø3.2	ø6.0	1.4~1.6	500

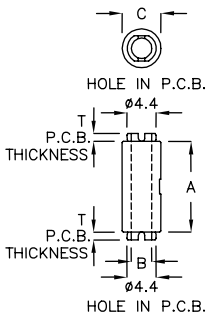

返回图片索引

圆体间隔柱 SPACER SUPPORT 3-108-1

- MATERIAL: NYLON 66(UL)
- FLAME CLASS: 94V-0/94V-2
- COLOR: NATURAL

PART NO	A	T P.C.B. THICKNESS	E P.C.B. THICKNESS	PACKAGE
ADM-20A	20.0	1.8~2.0	1.0~1.2	500

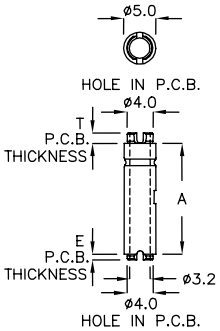

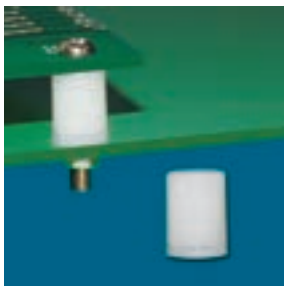

P.C. 板间隔柱 SPACER SUPPORT 3-108-2

- MATERIAL: NYLON 66(UL)
- FLAME CLASS: 94V-0/94V-2
- COLOR: NATURAL

PART NO	A	B	C	PACKAGE
SH-10	10.5	ø8.0	ø6.5	1000

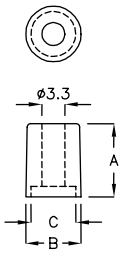

绝缘套 BUSHING 3-108-3

- MATERIAL: NYLON 66(UL)
- FLAME CLASS: 94V-0/94V-2
- COLOR: NATURAL

PART NO	A	B	C	D	E	PACKAGE
SH-12A	12.7	ø9.0	8.7	ø7.4	ø4.8	1000

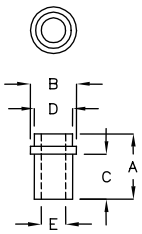

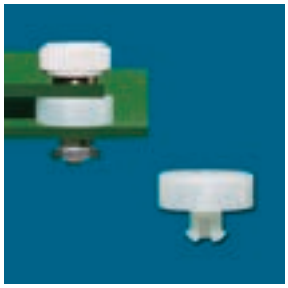

P.C. 板间隔柱 SPACER SUPPORT 3-108-4

- MATERIAL: NYLON 66(UL)
- FLAME CLASS: 94V-0/94V-2
- COLOR: NATURAL
- USE M3 SCREW

PART NO	A	B	C	D CHASSIS THICKNESS	PACKAGE
MHT-05	5.0	14.0	10.2	3.2~3.4	1000
MHT-5A	5.0	14.0	9.6	2.8~3.0	

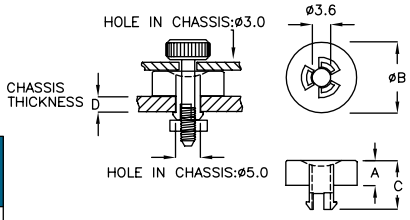

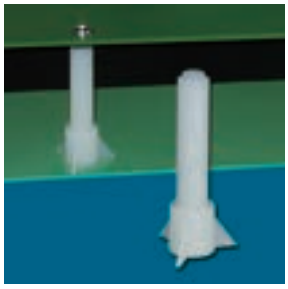

P.C. 板间隔柱 SPACER SUPPORT 3-108-5

- MATERIAL: NYLON 66(UL)
- FLAME CLASS: 94V-0/94V-2
- COLOR: NATURAL

PART NO	A	T P.C.B. THICKNESS	PACKAGE
ADGF-38C	37.5	0.8~1.0	200

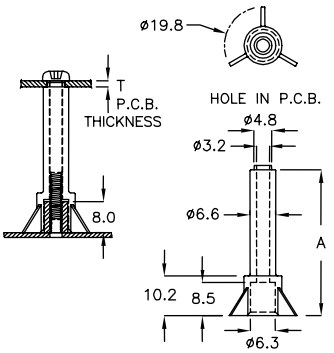

返回图片索引

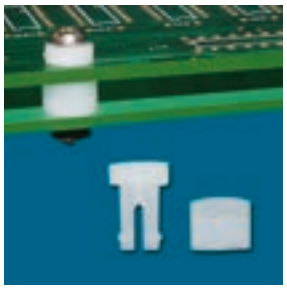

P.C. 板间隔柱 SPACER SUPPORT 3-109-1

- MATERIAL: NYLON 66(UL)
- FLAME CLASS: 94V-0/94V-2
- COLOR: NATURAL
- USE M3 SCREW
- P.C.B MAX THICKNESS: 2.4mm

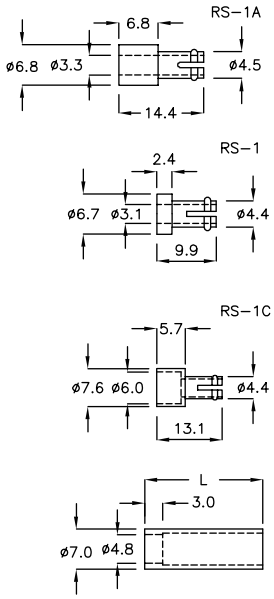

PART NO		L	HOLE IN P.C.B	HOLE IN CHASSIS	PACKAGE
RS-1	RS-57	6.0	ø5.0	ø3.5	1000
	RS-78	7.8			
	RS-105	10.5	ø5.0	ø3.5	
RS-1A	RS-145	14.5			
	RS-160	16.0			
	RS-180	18.4			
RS-1C	RS-215	21.5	ø5.0	ø3.5	
	RS-280	28.2	ø5.0	ø3.5	

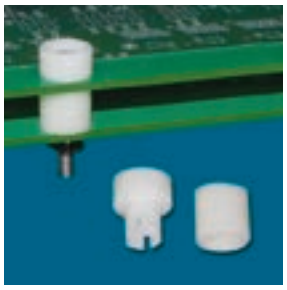

P.C. 板间隔柱 SPACER SUPPORT 3-109-2

- MATERIAL: ABS
- FLAME CLASS: 94HB
- COLOR: NATURAL
- USE M4 SCREW
- P.C.B MAX THICKNESS: 2.0mm

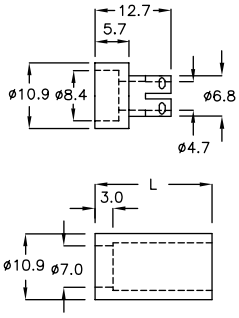

PART NO		L	HOLE IN P.C.B	HOLE IN CHASSIS	PACKAGE
RL-1	RL-6S	5.7	ø7.2	ø4.5	1000
	RL-10	10.0			
	RL-15	15.2	ø7.2	ø4.5	1000
	RL-20	20.2			
	RL-25	25.2			

圆体间隔柱 SPACER SUPPORT 3-109-3

- MATERIAL: PC(UL)
- FLAME CLASS: 94V-2
- COLOR: CLEAR

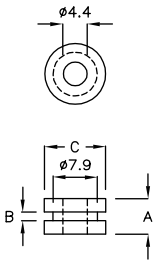

PART NO	A	B	C	PACKAGE
RS-2	5.0	1.6	ø11.0	500

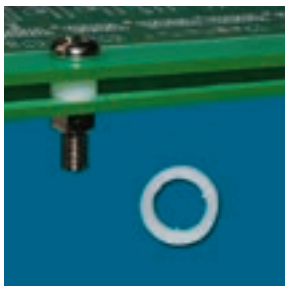

圆体间隔柱 SPACER SUPPORT 3-109-4

- MATERIAL: NYLON 66(UL)
- FLAME CLASS: 94V-0/94V-2
- COLOR: NATURAL

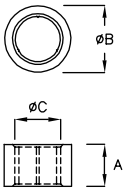

PART NO	A	B	C	PACKAGE
505-3L	5.0	8.0	5.45	2000

返回图片索引

圆体间隔柱 SPACER SUPPORT 3-110-1

- MATERIAL: NYLON 66(UL)
- FLAME CLASS: 94V-0/94V-2
- COLOR: NATURAL

PART NO	A	B	C	PACKAGE
403QP	3.8	5.8	4.3	2000
6310A	10.8	12.4	6.3	1000

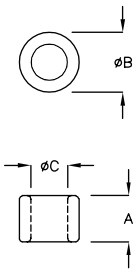

圆体间隔柱 SPACER SUPPORT 3-110-2

- MATERIAL: NYLON 66(UL)
- FLAME CLASS: 94V-0/94V-2
- COLOR: NATURAL

PART NO	A	B	C	PACKAGE
509A	9.0	9.5	5.1	1000
304K	4.0	5.0	3.15	2000

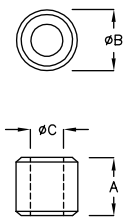

圆体间隔柱 SPACER SUPPORT 3-110-3

- MATERIAL: NYLON 66(UL)
- FLAME CLASS: 94V-0/94V-2
- COLOR: NATURAL,BLACK

PART NO	A	B	C	PACKAGE
403C	3.5	ø8.0	ø4.9	2000

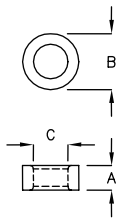

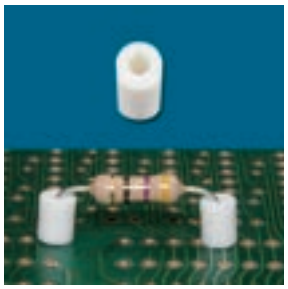

零件垫片 COMPONENT PAD 3-110-4

- MATERIAL: CERAMICS
- COLOR: NATURAL

PART NO	A	B	C	PACKAGE
103C	3.0	ø4.5	ø1.8	2000
103DC	3.1	ø2.5	ø1.1	
104C	4.5	ø4.5	ø1.8	
104MC	4.5	ø3.6	ø1.2	
109C	9.0	ø4.5	ø1.8	
109DC	9.0	ø3.8	ø1.0	
115MC	15.4	ø4.1	ø1.9	

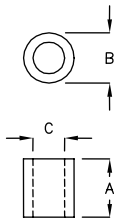

零件垫片 COMPONENT PAD 3-110-5

- MATERIAL: NYLON 66(UL)
- FLAME CLASS: 94V-0/94V-2
- COLOR: NATURAL

PART NO	A	B	C	PACKAGE
KWT–103	3.1	ø2.5	ø1.0	2000
KWT–103GH	3.1	ø2.5	ø1.2	

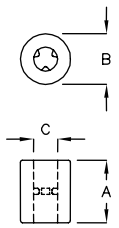

返回图片索引

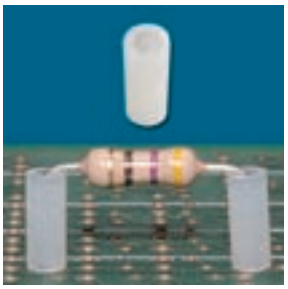

零件垫片 COMPONENT PAD 3-111-1

- MATERIAL: NYLON 66(UL)
- FLAME CLASS: 94V-0/94V-2
- MATERIAL: PBT(UL), ABS(UL)
- FLAME CLASS: 94V-0
- COLOR: NATURAL

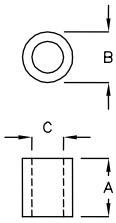

PART NO	MATERIAL	A	B	C	PACKAGE
101A	N66	1.1	ø3.0	ø1.7	2000
101CR	N66	1.6	ø2.2	ø0.7	
101DC	N66	1.6	ø3.2	ø0.8	
101MT	N66	1.6	ø3.2	ø1.2	
102F	N66	2.0	ø3.0	ø1.5	
102JK	N66	2.4	ø3.5	ø1.8	
102-H	PBT	2.5	ø3.2	ø1.5	
103AF	N66	3.0	ø2.5	ø1.5	
103S	N66/PBT	3.0	ø3.5	ø1.4	
103K	ABS	3.1	ø2.2	ø0.8	
103MR	N66	3.2	ø2.2	ø0.8	
103TD	N66	3.2	ø3.2	ø1.2	
★ 103AG	N66	3.25	ø3.5	ø1.6	
103M	N66	3.5	ø4.5	ø1.6	
103	N66	3.6	ø3.5	ø1.4	

PART NO	MATERIAL	A	B	C	PACKAGE
104	N66	4.2	ø4.5	ø1.4	2000
104M	N66	4.5	ø4.5	ø1.6	
104AD	N66	4.8	ø2.2	ø0.8	
104CF	N66	4.8	ø3.2	ø1.2	
104A	N66+FRP	5.0	ø4.0	ø1.4	
105A	N66	5.0	ø3.0	ø1.4	
105	N66	5.0	ø4.5	ø1.6	
105M	N66	5.5	ø4.5	ø1.6	
106	N66/PBT	6.0	ø4.4	ø1.6	
106GK	N66	6.4	ø3.2	ø1.2	
106HJ	N66	6.4	ø4.0	ø1.2	
107	N66/PBT	7.0	ø4.4	ø1.6	
108BH	N66	7.9	ø3.2	ø1.2	
108GL	N66	7.9	ø4.0	ø1.2	
108A	N66	8.0	ø3.2	ø1.6	
108	N66	8.0	ø4.5	ø1.4	
109CM	N66	9.5	ø3.2	ø1.2	
112NP	N66	12.7	ø3.2	ø1.2	

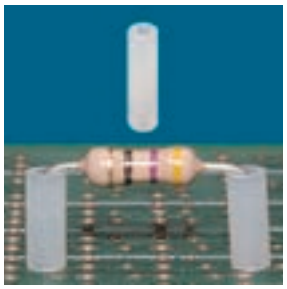

零件垫片 COMPONENT PAD 3-111-2

- MATERIAL: NYLON 66(UL)
- FLAME CLASS: 94V-0/94V-2
- COLOR: NATURAL

NEW

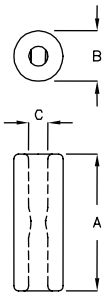

PART NO	A	B	C	PACKAGE
★ 111C	11.5	ø3.2	ø1.25	2000

圆体间隔柱 SPACER SUPPORT 3-111-3

- MATERIAL: NYLON 66(UL)
- FLAME CLASS: 94V-0/94V-2
- COLOR: NATURAL

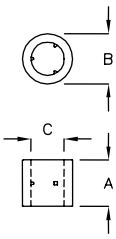

PART NO	A	B	C	USE SCREW	PACKAGE
KWT-302	2.0	ø5.0	ø3.3	M3	2000
KWT-305	5.0	ø5.0	ø3.3		
KWT-306	6.0	ø5.0	ø3.3		
KWT-308	8.0	ø5.0	ø3.3		
KWT-310	10.0	ø5.0	ø3.3		
KWT-311	11.0	ø5.0	ø3.3		
KWT-405	5.0	ø6.5	ø4.3	M4	
KWT-406	6.0	ø6.5	ø4.3		
KWT-408	8.0	ø6.5	ø4.3		
KWT-410	10.0	ø6.5	ø4.3		
KWT-412	12.0	ø6.5	ø4.3		
KWT-414	14.0	ø6.5	ø4.3		
KWT-416	16.0	ø6.5	ø4.3		

返回图片索引

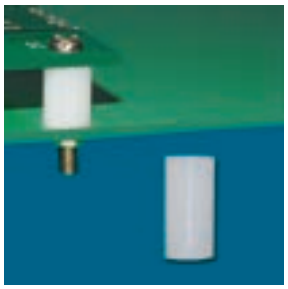

圆体间隔柱 SPACER SUPPORT 3-112-1

- MATERIAL: NYLON 66(UL)
- FLAME CLASS: 94V-0/94V-2
- COLOR: NATURAL

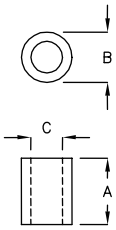

PART NO	A	B	C	PACKAGE
201	1.0	ø3.7	ø2.2	2000
201A	1.5	ø3.7	ø2.2	
201KG	1.6	ø2.2	ø0.8	
201JM	1.6	ø3.6	ø2.2	
201FN	1.6	ø4.2	ø2.7	
201C	1.8	ø3.7	ø2.2	
201D	1.9	ø3.0	ø2.0	
202	2.0	ø4.5	ø2.5	
202C	2.0	ø3.7	ø2.2	
202F	2.6	ø4.6	ø2.7	
202A	2.5	ø3.7	ø2.2	
203	3.0	ø4.5	ø2.5	
203A	3.0	ø3.5	ø2.2	
203C	3.0	ø3.7	ø2.2	
203EG	3.2	ø3.2	ø2.3	
203KJ	3.2	ø3.6	ø2.2	
203BU	3.2	ø4.2	ø2.7	
203M	3.5	ø4.5	ø2.5	
203D	3.7	ø4.5	ø2.5	
204	4.0	ø4.5	ø2.5	2000
204KT	4.0	ø4.7	ø2.7	
204A	4.1	ø3.6	ø2.2	
204M	4.5	ø4.5	ø2.5	
204FP	4.8	ø3.2	ø2.3	
204GN	4.8	ø3.6	ø2.2	
204NJ	4.8	ø4.2	ø2.7	
205	5.0	ø4.5	ø2.5	
205C	5.5	ø4.5	ø2.5	
206	6.0	ø4.5	ø2.5	
206BQ	6.4	ø3.2	ø2.3	
206AP	6.4	ø3.6	ø2.2	
206DN	6.4	ø4.2	ø2.7	
206CH	6.4	ø4.8	ø2.3	
206M	6.5	ø4.5	ø2.5	
206F	6.6	ø4.8	ø2.8	
207	7.0	ø4.8	ø2.3	
207A	7.0	ø3.7	ø2.2	
207C	7.5	ø3.7	ø2 3	

PART NO	A	B	C	PACKAGE
208FJ	7.9	ø3.6	ø2.2	2000
208	8.0	ø4.5	ø2.5	
208C	8.5	ø4.5	ø2.5	
209	9.0	ø4.5	ø2.5	
209AQ	9.5	ø3.6	ø2.2	
209C	9.5	ø4.5	ø2.5	
210	10.0	ø4.5	ø2.5	
211	11.0	ø3.7	ø2.2	
301PW	1.5	ø5.0	ø3.1	
301NL	1.6	ø4.8	ø3.2	
301BR	1.6	ø6.4	ø3.2	
301GS	1.6	ø6.4	ø3.7	
302A	2.0	ø6.0	ø3.0	
302C	2.0	ø6.5	ø3.1	
302B	2.5	ø5.0	ø3.1	
302DK	2.0	ø8.0	ø3.5	
302JY	2.5	ø8.0	ø3.2	
303	3.3	ø5.0	ø3.1	
303A	3.0	ø6.0	ø3.1	
303C	3.5	ø5.7	ø3.1	2000
303D	3.0	ø5.0	ø3.1	
303F	2.6	ø8.0	ø3.5	
303H	3.0	ø6.3	ø3.2	
303Q	2.8	ø6.3	ø3.2	
303DQ	3.2	ø4.8	ø3.2	
303HP	3.2	ø6.4	ø3.2	
303YF	3.2	ø6.4	ø3.7	
303RP	3.8	ø5.2	ø3.7	
303S	3.5	ø4.0	ø3.0	
304A	4.0	ø5.0	ø3.2	
304	4.2	ø5.0	ø3.1	
304C	4.5	ø6.0	ø3.2	
304PR	4.8	ø4.8	ø3.2	
304HX	4.8	ø6.4	ø3.2	
304JS	4.8	ø6.4	ø3.7	
305	5.0	ø5.0	ø3.1	
305A	5.0	ø8.0	ø3.1	
305C	5.5	ø5.0	ø3.0	
305DM	5.9	ø5.7	ø3.7	

PART NO	A	B	C	PACKAGE
306	6.1	ø5.0	ø3.1	2000
306A	6.3	ø6.5	ø3.9	
306XF	6.4	ø4.8	ø3.2	
306KY	6.4	ø6.4	ø3.2	
306QS	6.4	ø6.4	ø3.7	
306M	6.5	ø5.0	ø3.1	
306SK	6.0	ø8.0	ø3.3	
307	7.0	ø5.0	ø3.1	
307A	7.5	ø5.0	ø3.1	
307B	7.5	ø3.9	ø3.1	
308CW	7.9	ø6.4	ø3.2	
308FR	7.9	ø6.4	ø3.7	
308LT	7.9	ø4.8	ø3.2	
308	8.1	ø5.0	ø3.1	
308C	8.4	ø6.5	ø3.9	
308M	8.5	ø5.0	ø3.1	
308A	8.7	ø5.0	ø3.1	
309A	9.0	ø5.0	ø3.1	
309	9.2	ø5.0	ø3.1	
309MS	9.5	ø4.8	ø3.2	
309PT	9.5	ø6.4	ø3.7	
309C	9.6	ø7.5	ø3.5	
310	10.1	ø5.0	ø3.1	
311	11.0	ø5.0	ø3.1	1000
311MH	11.1	ø4.8	ø3.2	
311BN	11.1	ø6.4	ø3.2	
312A	12.0	ø5.0	ø3.2	
312	12.3	ø5.0	ø3.1	
313	13.0	ø5.0	ø3.1	
314	14.0	ø5.0	ø3.1	
315	15.0	ø5.0	ø3.1	
316	16.0	ø5.0	ø3.1	
317	17.0	ø5.0	ø3.1	
318	18.3	ø5.0	ø3.1	
319	19.0	ø5.0	ø3.1	
320	20.0	ø5.0	ø3.1	
324	24.0	ø5.0	ø3.1	500
331	31.0	ø5.0	ø3.1	
338	38.0	ø5.9	ø3.1	

返回图片索引

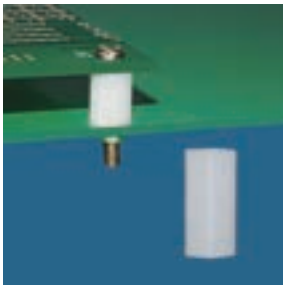

圆体间隔柱 SPACER SUPPORT 3-113-1

- MATERIAL: NYLON 66(UL)
- FLAME CLASS: 94V-0/94V-2
- COLOR: NATURAL

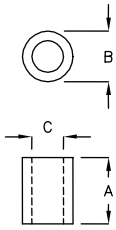

PART NO	A	B	C	PACKAGE
401AF	1.6	ø6.4	ø4.3	2000
402	2.0	ø6.5	ø4.0	
402A	2.5	ø6.5	ø4.0	
402TK	2.5	ø8.0	ø4.0	
403	3.0	ø6.5	ø4.0	
403DG	3.2	ø6.4	ø4.3	
403A	3.5	ø5.9	ø4.6	
403RL	3.5	ø8.0	ø4.5	
404C	4.0	ø6.5	ø3.5	
404	4.0	ø6.5	ø4.0	
405A	4.5	ø10.7	ø4.3	1000
405MQ	4.8	ø6.4	ø4.3	2000
405	5.2	ø6.5	ø3.9	
406	6.0	ø6.5	ø4.1	
406B	6.1	ø6.5	ø4.4	
406SR	6.4	ø6.4	ø4.3	
406A	6.4	ø6.5	ø4.1	
406D	6.4	ø10.0	ø4.5	
407	7.2	ø6.5	ø4.0	
407C	7.5	ø6.5	ø4.1	
408QF	7.9	ø6.4	ø4.3	
408L	8.0	ø7.4	ø4.5	
408	8.1	ø6.5	ø4.0	
408H	8.5	ø6.5	ø4.1	
409	9.1	ø6.5	ø3.9	
409C	9.5	ø6.5	ø4.1	
410	10.0	ø6.5	ø4.1	
411	11.0	ø6.5	ø4.1	1000
411TP	11.1	ø6.4	ø4.3	
412	12.0	ø6.3	ø4.2	
413	13.0	ø6.5	ø4.1	
414	14.0	ø8.0	ø4.2	
415	15.0	ø6.5	ø4.1	
416A	16.8	ø6.3	ø4.2	
417	17.1	ø6.3	ø4.2	
420	20.0	ø8.0	ø4.2	
421	21.0	ø8.0	ø4.0	
422A	22.23	ø8.0	ø4.93	500
425A	25.4	ø6.3	ø4.3	
427A	27.5	ø6.5	ø4.1	
428	28.0	ø6.5	ø4.1	

	PART NO	A	B	C	PACKAGE
	428A	28.7	ø6.5	ø4.1	500
	433A	33.5	ø8.0	ø4.3	
	503	3.0	ø7.0	ø5.0	2000
	503A	3.2	ø9.5	ø4.9	
	505	5.0	ø8.0	ø5.3	
	506	6.0	ø7.0	ø5.3	
	507	7.0	ø7.95	ø4.95	1000
	508	7.9	ø7.0	ø5.4	
	508A	8.0	ø10.0	ø5.6	
	509	9.0	ø7.0	ø5.3	
	510A	9.35	ø10.0	ø5.4	
	509M	9.6	ø8.0	ø5.0	
	510	10.0	ø7.0	ø5.3	
	516	16.0	ø7.0	ø5.3	
	525	25.0	ø8.0	ø5.1	500
	527A	27.5	ø7.0	ø5.5	
	530	30.0	ø8.0	ø5.1	
	612	12.6	ø6.5	ø3.8	1000
	614	14.2	ø6.5	ø3.7	
	617	17.0	ø10.0	ø6.2	
★	622	22.0	ø7.1	ø5.8	
	6305	5.0	ø8.5	ø6.3	
	6305A	5.5	ø7.3	ø6.3	
	6305PH	5.0	ø11.0	ø6.3	
	6315CX	15.0	ø11.0	ø6.3	
	7732FC	32.0	ø11.3	ø7.7	200
★	803H	3.2	ø10.2	ø8.2	1000
★	804H	4.7	ø10.2	ø8.2	
	8305RT	5.0	ø13.0	ø8.3	
	8315DK	15.0	ø13.0	ø8.3	
	8507	6.9	ø10.5	ø8.5	
★	903	3.2	ø11.6	ø9.1	
★	904	4.7	ø11.6	ø9.1	
	9634C	33.3	ø18.7	ø9.3	200
	51−080	8.0	ø8.0	ø5.1	1000
	57−065	6.5	ø13.0	ø5.7	
	64−072	7.2	ø7.65	ø6.4	
	65−100	10.0	ø10.0	ø6.5	
	70−080	8.0	ø10.0	ø7.0	
	70−110	11.0	ø10.0	ø7.0	
	75−130	13.0	ø10.5	ø7.5	
	82−080	8.0	ø10.6	ø8.2	

导电板间隔柱 CONDUCTIVE SUPPORT —— 3-114-1

- MATERIAL: NYLON 66(UL)
- FLAME CLASS: 94V-0/94V-2
- COLOR: NATURAL
- MATERIAL: PHOSPHOR BRONZE
- PLATING: NICKEL

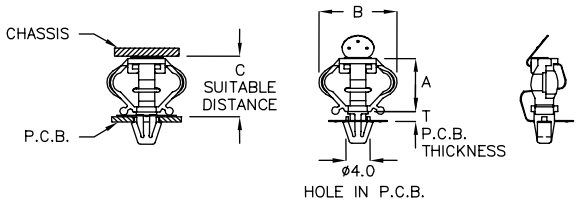

PART NO	A	B	T P.C.B. THICKNESS	C SUITABLE DISTANCE	PACKAGE
CQA-10	10.0	14.8	1.2~1.6	7.0~9.0	1000

导电板间隔柱 CONDUCTIVE SUPPORT —— 3-114-2

- MATERIAL: NYLON 66(UL)
- FLAME CLASS: 94V-0/94V-2
- COLOR: NATURAL
- MATERIAL: PHOSPHOR BRONZE
- PLATING: NICKEL

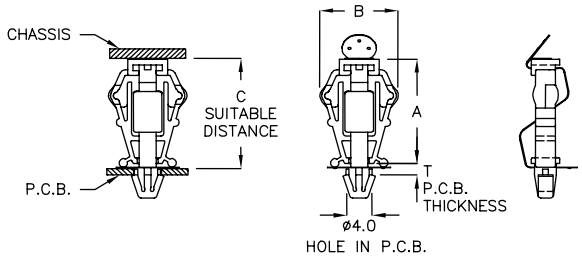

PART NO	A	B	T P.C.B. THICKNESS	C SUITABLE DISTANCE	PACKAGE
CQA-14DS	14.5	13.7	1.2~1.4	13.0~14.3	1000
CQA-18K	18.25	13.7	1.2~1.4	18.0~18.3	

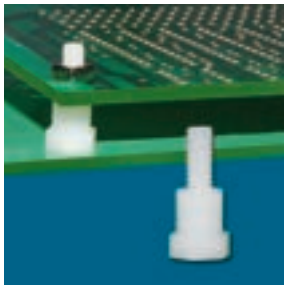

P.C. 板间隔柱 SPACER SUPPORT —— 3-114-3

- MATERIAL: NYLON 66(UL)
- FLAME CLASS: 94V-0/94V-2
- COLOR: NATURAL
- USE M2.5 TAPPING SCREW

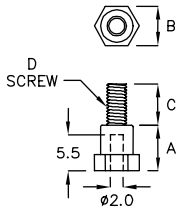

PART NO	A	B	C	D SCREW	PACKAGE
SQ-10A	7.0	6.0	6.3	M3	1000

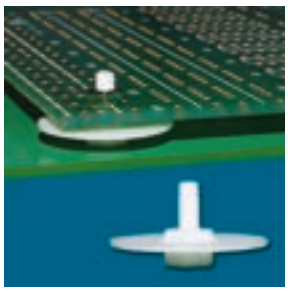

P.C. 板间隔柱 SPACER SUPPORT —— 3-114-4

- MATERIAL: NYLON 66(UL)
- FLAME CLASS: 94V-0/94V-2
- COLOR: NATURAL

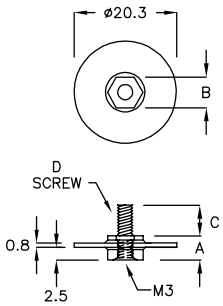

PART NO	A	B	C	D	PACKAGE
TAH-05	4.7	6.0	6.0	M3	500

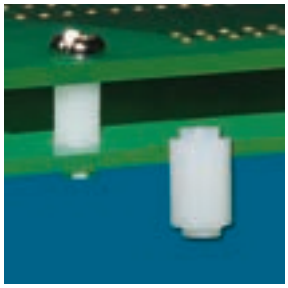

六角型间隔柱 SPACER SUPPORT —— 3-114-5

- MATERIAL: NYLON 66(UL)
- FLAME CLASS: 94V-0/94V-2
- COLOR: NATURAL
- USE M2 TAPPING SCREW

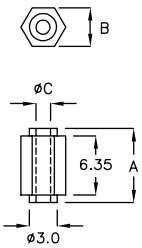

PART NO	A	B	C	PACKAGE
HHB-06D	7.95	4.15	ø1.6	1000

返回图片索引

六角型间隔柱 SPACER SUPPORT 3-115-1

- MATERIAL: NYLON 66(UL)
- FLAME CLASS: 94V-0/94V-2
- COLOR: NATURAL
- USE M2x5.5 SCREW

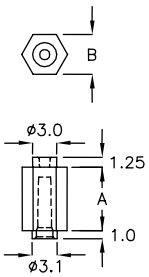

PART NO	A	B	PACKAGE
HHJ-8KC	7.95	5.0	1000

六角型间隔柱 SPACER SUPPORT 3-115-2

- MATERIAL: NYLON 66(UL)
- FLAME CLASS: 94V-0/94V-2
- COLOR: NATURAL
- USE M3 TAPPING SCREW

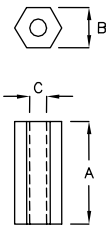

PART NO	A	B	C	PACKAGE
HWH-04	4.0	5.5	ø2.5	1000
HWH-10	10.0	4.5	ø2.45	
★ HWH-20	20.0	5.5	ø2.5	500

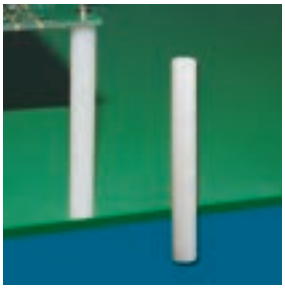

六角型间隔柱 SPACER SUPPORT 3-115-3

- MATERIAL: NYLON 66(UL)
- FLAME CLASS: 94V-0/94V-2
- COLOR: NATURAL
- USE M3 TAPPING SCREW

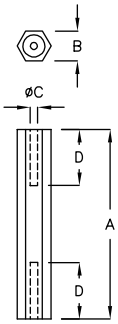

PART NO	A	B	C	D	PACKAGE
H-57	57.8	5.9	2.5	10.0	200
H-65	65.5	5.6	2.6	14.9	
H-105	105	9.9	2.6	14.6	100
H-140	139.5	9.9	2.6	14.6	

六角型间隔柱 SPACER SUPPORT 3-115-4

- MATERIAL: NYLON 66(UL)
- FLAME CLASS: 94V-0/94V-2
- COLOR: NATURAL
- USE M3 TAPPING SCREW

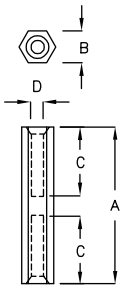

PART NO	A	B	C	D	PACKAGE
H-32	32.0	5.5	14.0	ø2.6	500
H-49	49.0	5.5	15.0		200

返回图片索引

六角型间隔柱 SPACER SUPPORT 3-116-1

- MATERIAL: NYLON 66(UL)
- FLAME CLASS: 94V-0/94V-2
- COLOR: NATURAL
- OPTIONAL MATERIAL: POM (94HB FLAMMABILITY)

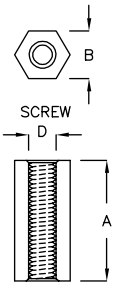

PART NO	A	B	D	PACKAGE
H2M-6	6.0	4.9	M2.6	1000
H-5KC	5.0	5.4	M3	2000
H-6S	6.0	5.5	M3	1000
H-6	6.45	5.5		
H-7	7.0	5.5		
H-8	8.0	5.5		
H-9	9.1	5.5		
H-10S	10.0	5.5		
H-10	10.6	5.5		
H-11	11.2	5.5		
H-12	12.2	5.5		
H-13	12.8	5.5		
H-14	14.2	5.5		

PART NO	A	B	D	PACKAGE
H-15	15.0	5.5	M3	1000
H-16	16.0	5.5		
H-17	17.1	5.5		
H-18	18.2	5.5		
H-20	20.0	5.5		
H-22	22.3	5.5		
H-24	24.0	5.5	M3	500
H-25	25.1	5.5		
H-26	26.0	5.5		
H-28	27.8	5.5		
H-30	30.0	5.5		
H4-36	36.0	8.0	M4	

六角型间隔柱 SPACER SUPPORT 3-116-2

- MATERIAL: NYLON 66(UL)
- FLAME CLASS: 94V-0/94V-2
- COLOR: NATURAL

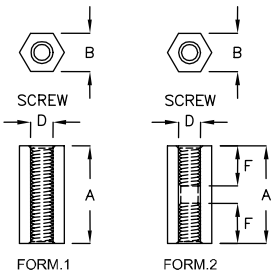

PART NO	A	B	D	F	FORM	PACKAGE
HU4-406A	6.35	4.75	#4-40		1	1000
HU4-409A	9.53	4.75	#4-40		1	
HU4-412A	12.7	4.75	#4-40		1	
HU4-415A	15.9	4.75	#4-40	6.0	2	
HU4-419A	19.05	4.75	#4-40	8.0	2	
HU4-606C	6.35	6.35	#4-40		1	
HU4-609C	9.53	6.35	#4-40		1	
HU4-611C	11.1	6.35	#4-40		1	
HU4-612C	12.7	6.35	#4-40		1	
HU4-615C	15.9	6.35	#4-40	6.0	2	
HU4-619C	19.05	6.35	#4-40	8.0	2	
HU4-625C	25.4	6.35	#4-40	8.0	2	

PART NO	A	B	D	F	FORM	PACKAGE
HU6-406D	6.35	4.75	#6-32		1	1000
HU6-409D	9.53	4.75	#6-32		1	
HU6-412D	12.7	4.75	#6-32		1	
HU6-415D	15.9	4.75	#6-32	6.0	2	
HU6-419D	19.05	4.75	#6-32	8.0	2	
HU6-606H	6.35	6.35	#6-32		1	
HU6-609H	9.53	6.35	#6-32		1	
HU6-612H	12.7	6.35	#6-32		1	
HU6-615H	15.9	6.35	#6-32	6.0	2	
HU6-619H	19.05	6.35	#6-32	8.0	2	
HU6-625H	25.4	6.35	#6-32	8.0	2	500

返回图片索引

六角型间隔柱 SPACER SUPPORT 3-117-1

- MATERIAL: NYLON 66(UL)
- FLAME CLASS: 94V-0/94V-2
- COLOR: NATURAL

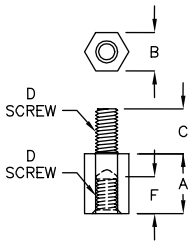

PART NO	A	B	C	D	F	PACKAGE
THU4-406C	6.4	4.8	4.8	#4-40	4.75	1000
THU4-409C	9.53					
THU4-412C	12.7					
THU4-415C	15.9					
THU4-419C	19.05	4.8	4.8	#4-40	4.75	500
THU4-425C	25.4					
THU4-606A	6.35	6.4	4.8	#4-40	4.75	1000
THU4-609A	9.53					
THU4-612A	12.7					
THU4-615A	15.9					
THU4-619A	19.05	6.4	4.8	#4-40	4.75	500
THU4-625A	25.4					

PART NO	A	B	C	D	F	PACKAGE
THU6-406H	6.35	4.8	6.4	#6-32	4.75	1000
THU6-409H	9.53	4.8	6.4	#6-32	6.35	
THU6-412H	12.7					
THU6-415H	15.9					
THU6-419H	19.05	4.8	6.4	#6-32	6.35	500
THU6-425H	25.4					
THU6-606D	6.35	6.4	6.4	#6-32	4.75	1000
THU6-609D	9.5	6.4	6.4	#6-32	6.35	
THU6-612D	12.7					
THU6-615D	15.9					
THU6-619D	19.05	6.4	6.4	#6-32	6.35	500
THU6-625D	25.4					

六角型间隔柱 SPACER SUPPORT 3-117-2

- MATERIAL: NYLON 66(UL)
- FLAME CLASS: 94V-0/94V-2
- COLOR: NATURAL
- D: SCREW
- OPTIONAL MATERIAL: POM (94HB FLAMMABILITY)

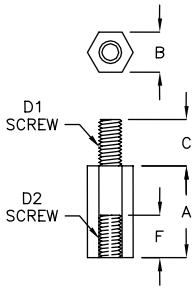

PART NO	A	B	C	D1 SCREW	D2 SCREW	F	PACKAGE
TH2F-6C	6.0	5.0	8.0	M3	M2.5	5.0	1000
TH2M-6	6.0	4.9	5.0	M2.6	M2.6	5.0	
TH-5	5.0	6.0	4.8	M3	M3	4.0	
TH-6	6.35	6.0	4.8				
TH-7	7.0	6.0	6.3	M3	M3	6.0	
TH-8	8.0	6.0	6.3				
TH-9	9.0	6.0	6.0				
TH-10	10.0	6.0	6.0	M3	M3	8.0	
TH-11	11.0	6.0	6.1				
TH-12	12.7	6.0	6.4	M3	M3	10.0	
TH-12A	12.0	4.7	6.4				
TH-14	14.0	6.0	6.0				
TH-14C	14.0	4.75	4.0				
TH-15	15.0	6.0	6.0				
TH-16	16.0	6.0	6.1				
TH-17.5	17.5	6.0	6.0				
TH-17.5A	17.5	4 75	6.0				

PART NO	A	B	C	D1 SCREW	D2 SCREW	F	PACKAGE
TH-18A	18.4	6.0	6.1	M3	M3	10.0	1000
TH-20	20.0	6.0	6.1	M3	M3	10.0	500
TH-21	21.0	6.0	6.0	M3	M3	10.5	1000
TH-22	22.0	6.0	6.4	M3	M3	10.0	500
TH-25	25.2	6.0	6.5				
TH-30	30.0	6.0	6.5	M3	M3	10.5	
TH4-10	10.1	6.1	6.1	M4	M3	8.0	1000
★ TH4-12C	12.7	6.0	6.0	M4	M4	8.0	
TH4-13	13.1	6.1	6.0	M4	M4	10.5	
TH4-15	15.0	6.0	6.0	M4	M4	10.0	
★ TH4-17C	17.5	8.0	5.5	M4	M4	8.0	
TH4-19	19.1	8.0	5.5	M4	M4	8.0	500
TH4-25	25.1	6.1	6.5	M4	M4	10.3	
TH4-30	30.2	6.1	6.4	M4	M4	10.0	
TH4-37	37.0	8.0	5.5	M4	M4	8.0	200
TH4-45	45.3	6.0	6.4	M4	M4	10.0	

返回图片索引

六角型间隔柱 SPACER SUPPORT 3-118-1

- MATERIAL: NYLON 66(UL)
- FLAME CLASS: 94V-0/94V-2
- COLOR: NATURAL
- USE TAPPING SCREW

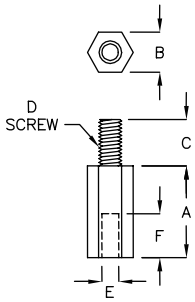

PART NO	A	B	C	D SCREW	E	F	USE TAPPING SCREW	PACKAGE
TH2−4	4.0	5.0	2.8	M2	ø1.6	2.8	M2	2000
TH−15A	15.0	5.0	5.0	#6−32	ø2.8	10.0	#6−32	1000

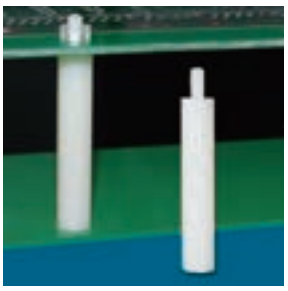

六角型间隔柱 SPACER SUPPORT 3-118-2

- MATERIAL: NYLON 66(UL)
- FLAME CLASS: 94V-0/94V-2
- COLOR: NATURAL

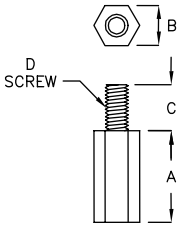

PART NO	A	B	C	D SCREW	PACKAGE
THK−35	35.0	6.0	6.0	M3	1000
THK−36M	36.0	6.0	6.0		
THK−37M	37.0	6.0	6.0		

P.C. 板间隔柱 SPACER SUPPORT 3-118-3

- MATERIAL: NYLON 66(UL)
- FLAME CLASS: 94V-0/94V-2
- COLOR: NATURAL

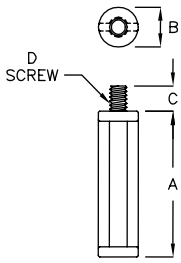

PART NO	A	B	C	D SCREW	PACKAGE
THB−29	29.2	ø8.0	5.0	#6−32	1000

六角型间隔柱 SPACER SUPPORT 3-118-4

- MATERIAL: NYLON 66(UL)
- FLAME CLASS: 94V-0/94V-2
- COLOR: NATURAL

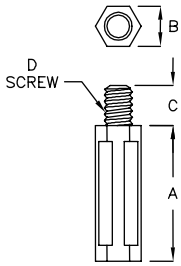

PART NO	A	B	C	D SCREW	PACKAGE
THM−17	17.0	5.0	5.0	#6−32	1000

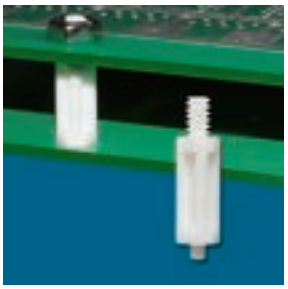

六角型间隔柱 SPACER SUPPORT 3-118-5

- MATERIAL: NYLON 66(UL)
- FLAME CLASS: 94V-0/94V-2
- COLOR: NATURAL

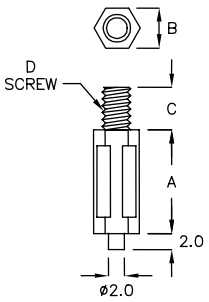

PART NO	A	B	C	D SCREW	PACKAGE
THC−13	13.0	5.0	5.0	#6−32	2000

返回图片索引

六角型间隔柱 SPACER SUPPORT 3-119-1

- MATERIAL: NYLON 66(UL), PPS(UL)
- FLAME CLASS: 94V-0/94V-2
- COLOR: BLACK
- SCREW MATERIAL: BRASS

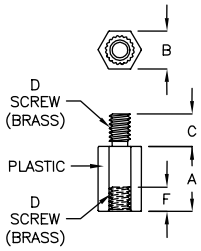

PART NO	MATERIAL	A	B	C	D SCREW	F	PACKAGE
TH3F-6R	N66	6.0	6.0	3.5	M3	2.9	500
TH3F-712G	PPS	12.0	7.0	6.0	M3	4.0	
THU6-712F	PPS	12.0	7.0	6.0	#6-32	4.5	

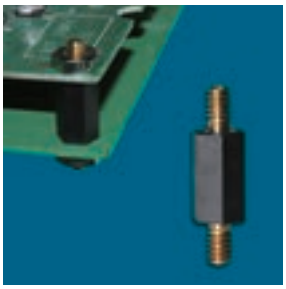

六角型间隔柱 SPACER SUPPORT 3-119-2

- MATERIAL: PBT(UL)
- FLAME CLASS: 94V-0
- COLOR: BLACK
- SCREW MATERIAL: BRASS

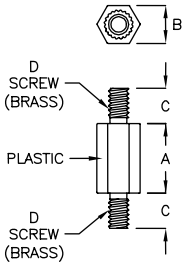

PART NO	A	B	C	D SCREW	PACKAGE
THT-6U12	12.0	6.5	6.0	#6-32	500

六角型间隔柱 SPACER SUPPORT 3-119-3

- MATERIAL: PPS(UL)
- FLAME CLASS: 94V-0
- COLOR: BLACK
- SCREW MATERIAL: BRASS

NEW

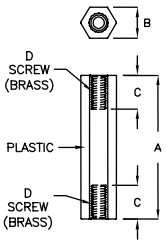

	PART NO	A	B	C	D SCREW	PACKAGE
★	HTH-77K	77.5	6.4	7.0	M3	100
★	HTH-81C	81.5	6.4	7.0	M3	

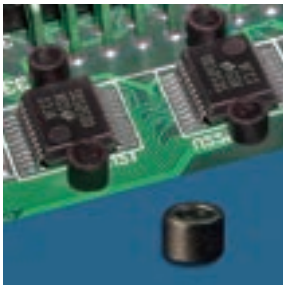

P.C.B 板支撑柱 P.C.B SUPPORT 3-119-4

- MATERIAL: NYLON 46(UL)
- FLAME CLASS: 94V-0/94V-2
- COLOR: BLACK

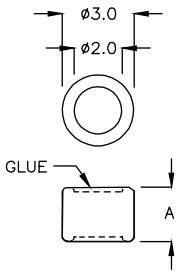

PART NO	A	PACKAGE
DPX-02	2.3	2000

间隔柱 SPACER SUPPORT 3-119-5

- MATERIAL: PC(UL)
- COLOR: WHITE

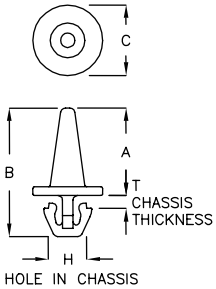

PART NO	A	B	C	H HOLE IN CHASSIS	T CHASSIS THICKNESS	PACKAGE
CBD-10SA	10.0	14.65	ø8.0	ø4.6	1.2	1000

返回图片索引

间隔柱 SPACER SUPPORT 3-120-1

- MATERIAL: PC(UL)
- COLOR: WHITE

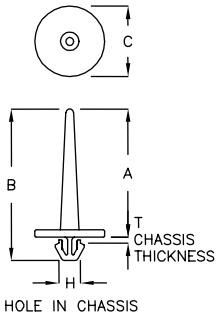

PART NO	A	B	C	H HOLE IN CHASSIS	T CHASSIS THICKNESS	PACKAGE
CBD-21HR	21.3	24.85	ø12.0	ø3.8	0.6~0.8	500
CBD-28AP	28.5	32.05	ø10.0	ø3.8	0.6~0.8	
CBD-28PQ	28.8	32.6	ø10.0	ø3.8	0.9~1.0	
CBD-29M	29.5	33.05	ø10.0	ø3.8	0.6~0.8	
CBD-31MA	31.5	35.05	ø10.0	ø3.8	0.6~0.8	

间隔柱 SPACER SUPPORT 3-120-2

- MATERIAL: PC(UL)
- COLOR: WHITE

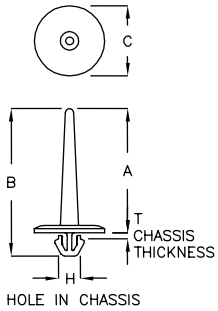

PART NO	A	B	C	H HOLE IN CHASSIS	T CHASSIS THICKNESS	PACKAGE
CBD-25A	25.4	29.9	ø13.3	ø4.5	0.6~0.8	500
CBD-27F	27.2	31.1	ø15.0	ø4.8	0.8~1.0	
CBD-33AC	33.1	36.75	ø13.4	ø4.6	0.5~0.6	
CBD-33P	33.0	36.9	ø13.3	ø4.6	0.5~0.8	

间隔柱 SPACER SUPPORT 3-120-3

- MATERIAL: PC(UL)
- COLOR: CLEAR

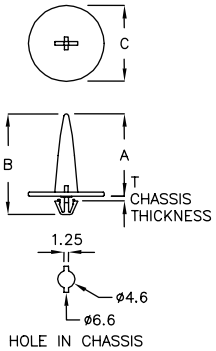

Built-In Anti-Spin Function

PART NO	A	B	C	T CHASSIS THICKNESS	PACKAGE
KFD-21A	21.75	26.65	ø20.0	0.6	500

间隔柱 SPACER SUPPORT 3-120-4

- MATERIAL: PC(UL)
- COLOR: CLEAR

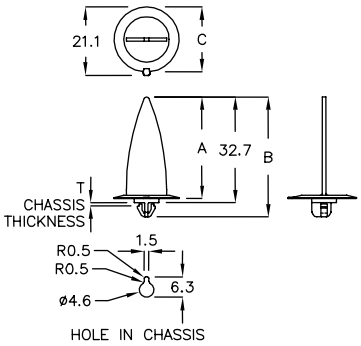

Built-In Anti-Spin Function

PART NO	A	B	C	T CHASSIS THICKNESS	PACKAGE
KFL-31FD	31.4	37.0	ø20.0	0.6~0.8	500

返回图片索引

间隔柱 SPACER SUPPORT 3-121-1

- MATERIAL: PC(UL)
- COLOR: CLEAR

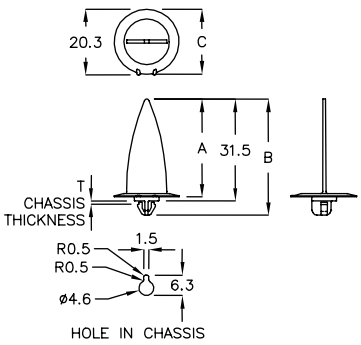

Built-In Anti-Spin Function

PART NO	A	B	C	T CHASSIS THICKNESS	PACKAGE
KFJ-30G	30.2	35.8	ø20.0	0.8	500

间隔柱 SPACER SUPPORT 3-121-2

- MATERIAL: PC(UL)
- COLOR: WHITE

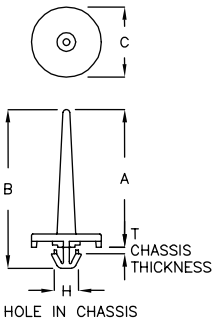

PART NO	A	B	C	H HOLE IN CHASSIS	T CHASSIS THICKNESS	PACKAGE
CBL-42CY	42.6	47.1	ø15.0	ø5.0	1.2~1.3	500

间隔柱 SPACER SUPPORT 3-121-3

- MATERIAL: PC(UL)
- COLOR: WHITE

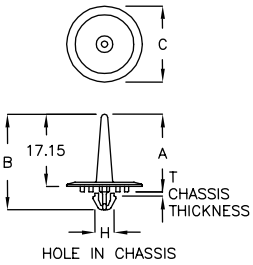

PART NO	A	B	C	H HOLE IN CHASSIS	T CHASSIS THICKNESS	PACKAGE
CBLA-18JL	18.5	22.8	ø18.0	ø4.6	0.8	500

间隔柱 SPACER SUPPORT 3-121-3

- MATERIAL: PC(UL)
- COLOR: WHITE

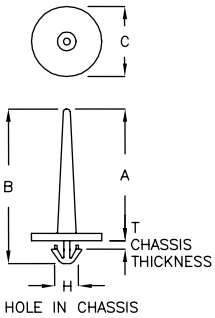

PART NO	A	B	C	H HOLE IN CHASSIS	T CHASSIS THICKNESS	PACKAGE
CBL-42MK	40.0	44.1	ø15.0	ø5.2	1.0~1.3	500

间隔柱 SPACER SUPPORT 3-121-4

- MATERIAL: PC(UL)
- COLOR: WHITE, CLEAR

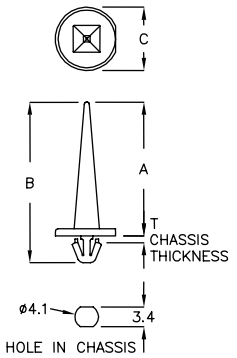

PART NO	A	B	C	T CHASSIS THICKNESS	PACKAGE
FXA-30Y	30.5	35.1	ø11.0	0.8~1.0	500
FXA-35PC	35.8	40.4	ø11.0	1.05	
FXA-39A	39.4	44.0	ø11.0	1.05	

返回图片索引

间隔柱 SPACER SUPPORT 3-122-1

- MATERIAL: PC(UL)
- COLOR: WHITE

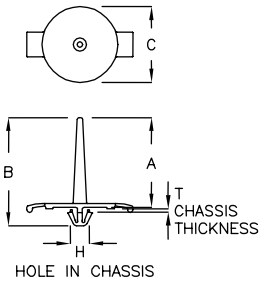

PART NO	A	B	C	H HOLE IN CHASSIS	T CHASSIS THICKNESS	PACKAGE
SUP-23A	24.0	28.9	ø20.0	ø5.0	0.6~0.8	500
SUP-34D	34.0	38.9	ø20.0	ø5.0	0.6~0.8	

间隔柱 SPACER SUPPORT 3-122-2

- MATERIAL: PC(UL)
- COLOR: WHITE

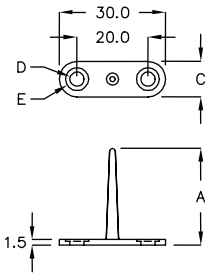

PART NO	A	C	D	E	PACKAGE
FJW-18PQ	18.8	10.0	ø4.0	ø6.5	500
FJW-25T	25.2	10.0	ø4.0	ø6.5	
FJW-27AK	27.2	10.0	ø4.0	ø6.5	
FJW-27HM	27.2	10.0	ø4.3	ø8.5	

间隔柱 SPACER SUPPORT 3-122-3

- MATERIAL: PC(UL)
- COLOR: WHITE

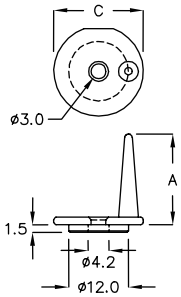

PART NO	A	C	PACKAGE
CBPA-18C	18.2	ø18.0	200

间隔柱 SPACER SUPPORT 3-122-3

- MATERIAL: PC(UL)
- COLOR: WHITE
- ADHESIVE TAPE: 3M

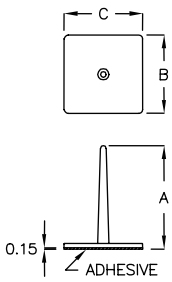

PART NO	A	B	C	PACKAGE
FZA-12TC	13.05	20.0	20.0	500
FZA-26FD	26.15	20.0	20.0	
FZA-30PJ	30.15	20.0	25.0	

间隔柱 SPACER SUPPORT 3-122-4

- MATERIAL: PC(UL)
- COLOR: CLEAR

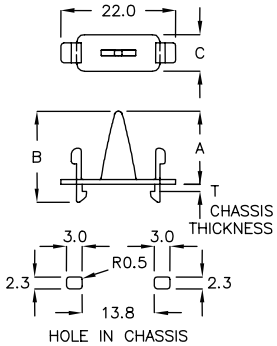

PART NO	A	B	C	T CHASSIS THICKNESS	PACKAGE
DCRJ-14MK	14.0	17.4	7.0	1.0~1.2	500

返回图片索引

间隔柱 SPACER SUPPORT 3-123-1

- MATERIAL: PC(UL)
- COLOR: WHITE

PART NO	A	B	C	T CHASSIS THICKNESS	PACKAGE
DCR-14H	14.0	17.4	7.0	1.0~1.2	500

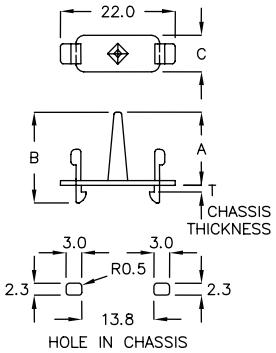

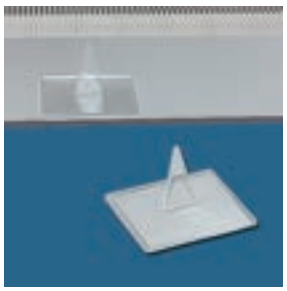

间隔柱 SPACER SUPPORT 3-123-2

- MATERIAL: PC(UL)
- COLOR: CLEAR
- ADHESIVE TAPE: GENERAL

PART NO	A	B	C	PACKAGE
FJH-12YK	12.55	20.0	20.0	500
FJH-19CY	19.25	20.0	20.0	

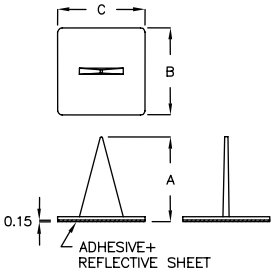

间隔柱 SPACER SUPPORT 3-123-3

- MATERIAL: PC(UL)
- COLOR: CLEAR
- ADHESIVE TAPE: GENERAL

PART NO	A	B	C	PACKAGE
FJH-29K	29.65	20.0	20.0	500
FJH-30	30.15	20.0	20.0	
FJH-33M	33.72	20.0	20.0	

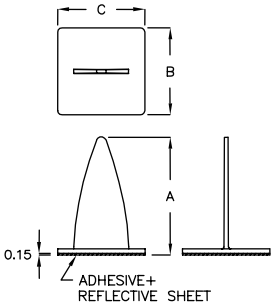

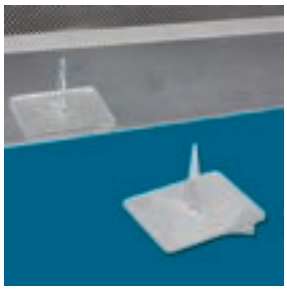

间隔柱 SPACER SUPPORT 3-123-4

- MATERIAL: PC(UL)
- COLOR: CLEAR
- ADHESIVE TAPE: 3M

PART NO	A	B	C	PACKAGE
FJH-14CR	14.35	22.0	27.0	500
FJH-19KT	19.9	22.0	27.0	
FJH-20MA	20.7	30.0	25.0	
FJH-21DP	21.85	20.0	20.0	
FJH-21GK	21.65	22.0	27.0	
FJH-21MD	21.65	22.0	27.0	

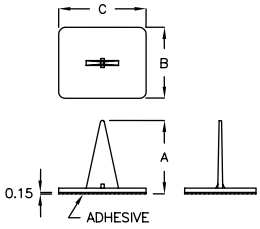

间隔柱 SPACER SUPPORT 3-123-5

- MATERIAL: PC(UL)
- COLOR: CLEAR

此产品亦可贴背胶
OPTIONAL WITH ADHESIVE TAPE ON BASE

PART NO	A	D	E	PACKAGE
FMY-22C	22.0	ø4.2	ø3.7	500

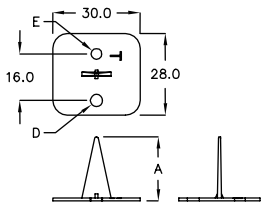

返回图片索引

间隔柱 SPACER SUPPORT 3-124-1

- MATERIAL: PC(UL)
- COLOR: CLEAR

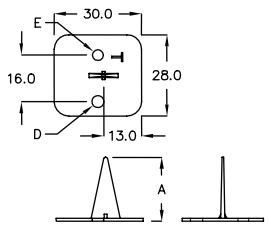

此产品亦可贴背胶
OPTIONAL WITH ADHESIVE TAPE ON BASE

PART NO	A	D	E	PACKAGE
FMY-21TC	21.5	ø4.2	ø3.7	200
FMY-22KP	22.0	ø4.2	ø3.7	

间隔柱 SPACER SUPPORT 3-124-2

- MATERIAL: PC(UL)
- COLOR: CLEAR

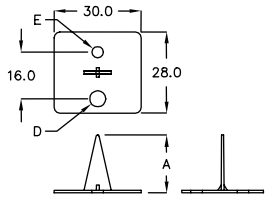

此产品亦可贴背胶
OPTIONAL WITH ADHESIVE TAPE ON BASE

PART NO	A	D	E	PACKAGE
FMG-19LH	19.9	ø5.5	ø3.9	500

间隔柱 SPACER SUPPORT 3-124-3

- MATERIAL: PC(UL)
- COLOR: CLEAR

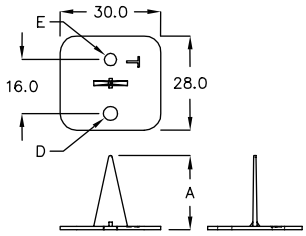

此产品亦可贴背胶
OPTIONAL WITH ADHESIVE TAPE ON BASE

PART NO	A	D	E	PACKAGE
FMQ-21MC	21.5	ø4.2	ø3.5	500

间隔柱 SPACER SUPPORT 3-124-4

- MATERIAL: PC(UL)
- COLOR: CLEAR

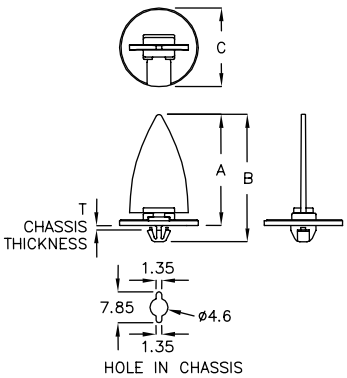

PART NO	A	B	C	T CHASSIS THICKNESS	PACKAGE
KFDX-28M	28.3	32.4	ø20.0	0.8	500

返回图片索引

04

LED套
LED HOLDER






LED座
LED HOUSING


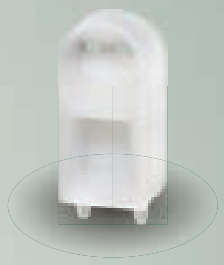

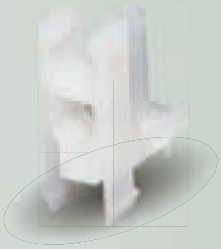
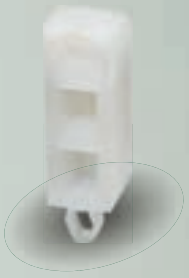
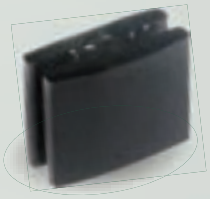
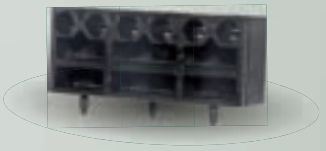
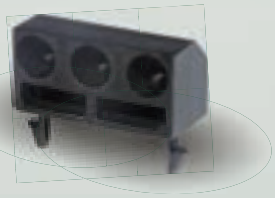

LED 套 LED HOLDER 4-2-1

- MATERIAL: NYLON 66(UL)
- FLAME CLASS: 94V-0/94V-2
- COLOR: NATURAL

FOR QUADRATE 2PIN LED		
PART NO	A	PACKAGE
LEQ-9	6.6	2000

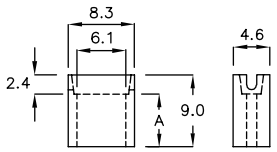

LED 套 LED HOLDER 4-2-2

- MATERIAL: NYLON 66(UL)
- FLAME CLASS: 94V-0/94V-2
- COLOR: NATURAL

FOR QUADRATE 2PIN LED		
PART NO	A	PACKAGE
LEQ-1	2.6	2000

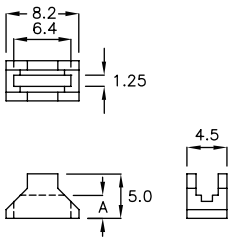

LED 套 LED HOLDER 4-2-3

- MATERIAL: NYLON 66(UL)
- FLAME CLASS: 94V-0/94V-2
- COLOR: NATURAL

FOR QUADRATE 2PIN LED		
PART NO	A	PACKAGE
LED-2x10	7.8	1000

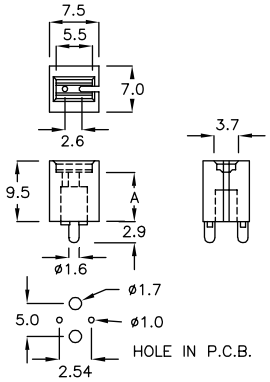

LED 套 LED HOLDER 4-2-4

- MATERIAL: NYLON 66(UL)
- FLAME CLASS: 94V-0/94V-2
- COLOR: NATURAL

FOR QUADRATE 2PIN LED			
PART NO	A	B	PACKAGE
LEQ-3T	3.0	6.5	2000
LEQ-4T	4.0	7.5	

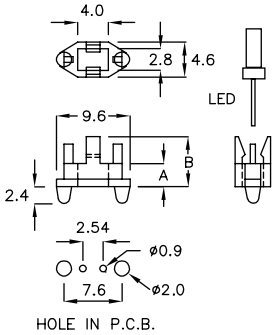

LED 套 LED HOLDER 4-2-5

- MATERIAL: NYLON 66(UL)
- FLAME CLASS: 94V-0/94V-2
- COLOR: NATURAL

FOR QUADRATE 2PIN LED		
PART NO	A	PACKAGE
LED-13.5	13.5	1000

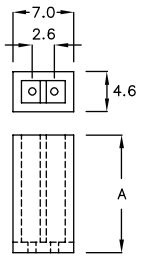

返回图片索引

LED 套 LED HOLDER 4-3-1

- MATERIAL: NYLON 66(UL)
- FLAME CLASS: 94V-0/94V-2
- COLOR: BLACK

FOR QUADRATE 2PIN LED		
PART NO	A	PACKAGE
LEJ-3	3.3	2000

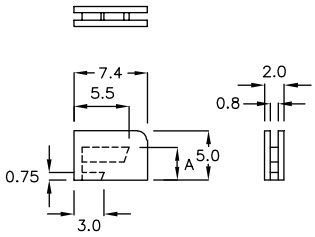

LED 座 LED HOUSING 4-3-2

- MATERIAL: NYLON 66(UL)
- FLAME CLASS: 94V-0/94V-2
- COLOR: BLACK

FOR QUADRATE 2PIN,3PIN LED			
PART NO	A	B	PACKAGE
SLED-1	5.2	7.8	2000
SLED-2M	6.2	8.6	

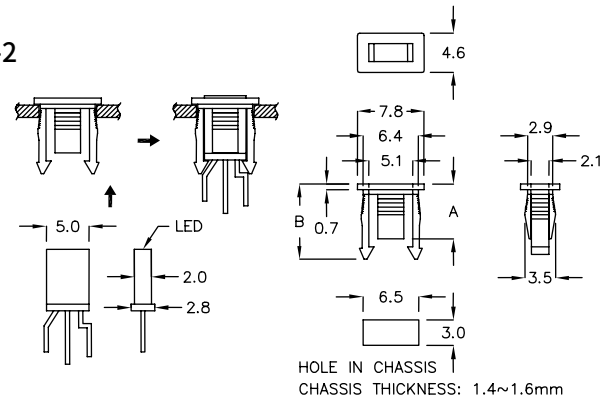

LED 座 LED HOUSING 4-3-3

- MATERIAL: NYLON 66(UL)
- FLAME CLASS: 94V-0/94V-2
- COLOR: BLACK

FOR QUADRATE 2PIN,3PIN LED			
PART NO	A	B	PACKAGE
SLED-2	5.2	7.6	2000

ALSO CAN ASSEMBLE WITH UW-03A

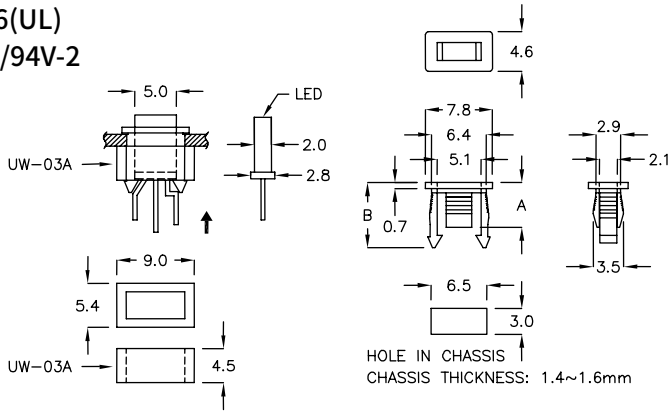

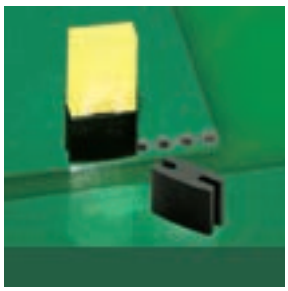

LED 套 LED HOLDER 4-3-4

- MATERIAL: NYLON 66(UL)
- FLAME CLASS: 94V-0/94V-2
- COLOR: BLACK

FOR QUADRATE 2PIN LED			
PART NO	A	B	PACKAGE
EDH-04	4.0	5.1	2000
EDH-4A	4.5	5.1	
EDH-9CF	9.5	5.1	1000

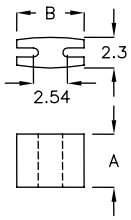

LED 套 LED HOLDER 4-3-5

- MATERIAL: NYLON 66(UL)
- FLAME CLASS: 94V-0/94V-2
- COLOR: NATURAL

FOR QUADRATE 3PIN LED		
PART NO	A	PACKAGE
LED-3x3	3.2	2000
LED3x4	4.0	

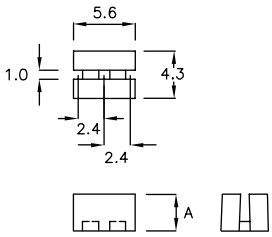

返回图片索引

LED 套 LED HOLDER 4-4-1

- MATERIAL: NYLON 66(UL)
- FLAME CLASS: 94V-0/94V-2
- COLOR: BLACK

Built–In Clamp Function

FOR QUADRATE 3PIN LED		
PART NO	A	PACKAGE
LED–3x2KQ	2.1	2000

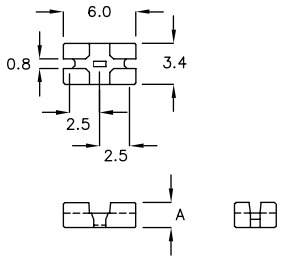

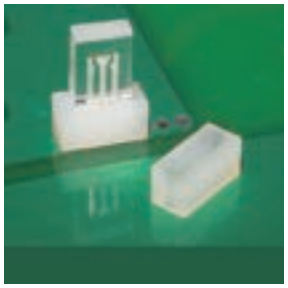

LED 套 LED HOLDER 4-4-2

- MATERIAL: NYLON 66(UL)
- FLAME CLASS: 94V-0/94V-2
- COLOR: NATURAL

FOR QUADRATE 3PIN LED				
PART NO	A	B	C	PACKAGE
QLG–4S	3.8	7.6	3.5	2000

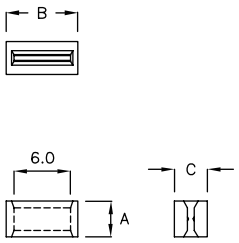

LED 套 LED HOLDER 4-4-3

- MATERIAL: NYLON 66(UL)
- FLAME CLASS: 94V-0/94V-2
- COLOR: NATURAL

FOR QUADRATE 3PIN LED				
PART NO	A	D	E	PACKAGE
QLE–1MH	1.5	ø1.4	3.7	2000
QLE–12C	12.0	ø1.45	3.9	1000

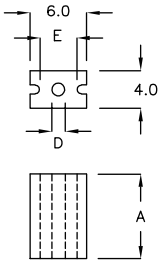

LED 套 LED HOLDER 4-4-4

- MATERIAL: NYLON 66(UL)
- FLAME CLASS: 94V-0/94V-2
- COLOR: NATURAL

FOR QUADRATE 3PIN LED			
PART NO	A	D	PACKAGE
QLE–3	3.0	ø1.1	2000
QLE–4B	3.8		
QLE–5B	5.1		
QLE–5M	5.5		
QLE–7B	7.0		
QLE–8B	8.0		
QLE–10	10.0	ø1.1	1000
QLE–12	12.0	ø1.45	

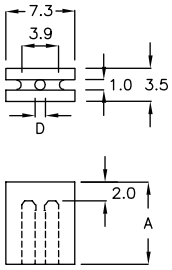

返回图片索引

LED 套 LED HOLDER 4-5-1

- MATERIAL: NYLON 66(UL)
- FLAME CLASS: 94V-0/94V-2
- COLOR: NATURAL

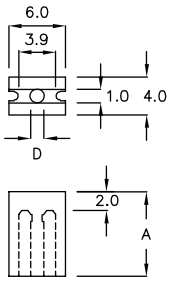

FOR QUADRATE 3PIN LED			
PART NO	A	D	PACKAGE
QLE-4	4.0	ø1.1	2000
QLE-5	5.0		
QLE-6	6.0		
QLE-7	7.0		
QLE-8	8.0		
QLE-9	9.0	ø1.1	1000
QLE-10A	10.0	ø1.45	
QLE-11	11.0		
QLE-12A	12.0	ø1.1	
QLE-13	13.0		
QLE-14	14.0		
QLE-15	15.0		

LED 套 LED HOLDER 4-5-2

- MATERIAL: NYLON 66(UL)
- FLAME CLASS: 94V-0/94V-2
- COLOR: BLACK

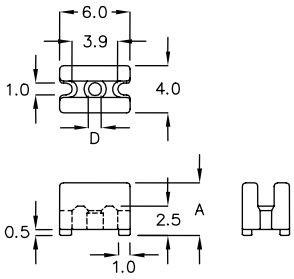

FOR QUADRATE 3PIN LED			
PART NO	A	D	PACKAGE
QLEH-4A	4.5	ø1.1	2000

LED 套 LED HOLDER 4-5-3

- MATERIAL: NYLON 66(UL)
- FLAME CLASS: 94V-0/94V-2
- COLOR: NATURAL

Built-In Clamp Function

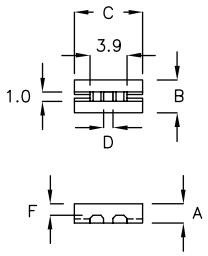

FOR QUADRATE 3PIN LED						
PART NO	A	B	C	D	F	PACKAGE
QLE-02	2.0	3.5	7.3	1.0	1.2	2000
QLE-3HA	3.0	3.0	6.5	1.0	2.2	

LED 套 LED HOLDER 4-5-4

- MATERIAL: NYLON 66(UL)
- FLAME CLASS: 94V-0/94V-2
- COLOR: NATURAL

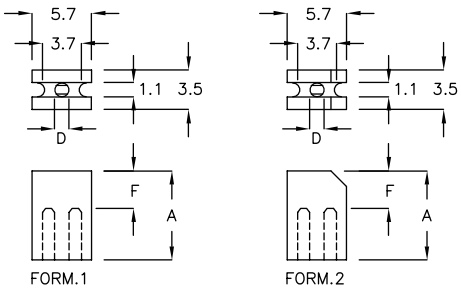

Built-In Clamp Function

FOR QUADRATE 3PIN LED					
PART NO	A	F	D	FORM	PACKAGE
QLE-8LR	8.5	3.5	ø1.1	2	1000
QLE-9AK	9.0	4.0	ø1.1	1	

返回图片索引

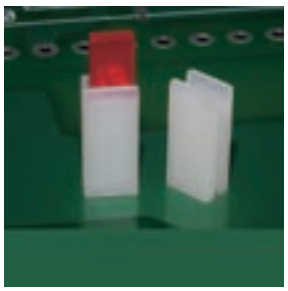

LED 套 LED HOLDER 4-6-1

- MATERIAL: NYLON 66(UL)
- FLAME CLASS: 94V-0/94V-2
- COLOR: NATURAL

FOR QUADRATE 3PIN LED		
PART NO	A	PACKAGE
QLK-5M	5.4	2000
QLK-6	6.0	
QLK-7	6.9	
QLK-8	8.0	
QLK-9	9.0	1000
QLK-10	10.0	
QLK-11	11.0	
QLK-12	12.0	
QLK-13	13.0	
QLK-14	14.0	
QLK-15	14.9	
QLK-16	15.9	
QLK-17	17.0	
QLK-18	18.0	
QLK-18A	18.5	
QLK-19	19.0	

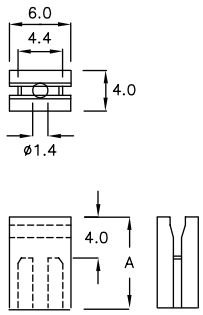

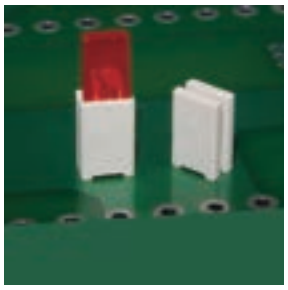

LED 套 LED HOLDER 4-6-2

- MATERIAL: NYLON 46(UL)
- FLAME CLASS: 94V-0/94V-2
- COLOR: NATURAL

Built-In Clamp Function

FOR QUADRATE LED 3PIN			
PART NO	A	D	PACKAGE
QLB-9NC	9.0	ø1.1	1000

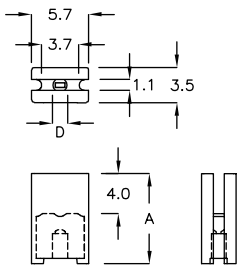

LED 套 LED HOLDER 4-6-3

- MATERIAL: NYLON 66(UL)
- FLAME CLASS: 94V-0/94V-2
- COLOR: NATURAL

FOR QUADRATE 3PIN LED			
PART NO	A	B	PACKAGE
QLQ-6	6.0	8.0	2000

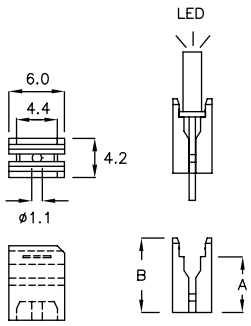

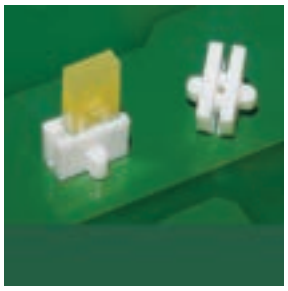

LED 套 LED HOLDER 4-6-4

- MATERIAL: NYLON 66(UL)
- FLAME CLASS: 94V-0/94V-2
- COLOR: NATURAL

Built-In Clamp Function

FOR QUADRATE 3PIN LED			
PART NO	A	B	PACKAGE
QLK-4T	2.5	4.5	2000

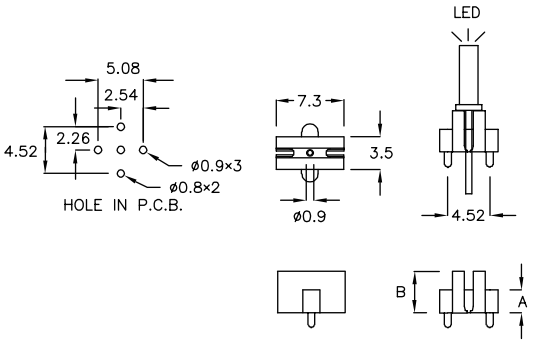

返回图片索引

LED 套 LED HOLDER 4-7-1

- MATERIAL: NYLON 66(UL)
- FLAME CLASS: 94V-0/94V-2
- COLOR: NATURAL,BLACK

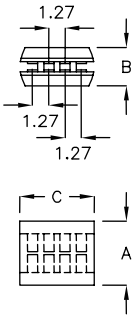

Built–In Clamp Function

FOR ø5 4PIN LED				
PART NO	A	B	C	PACKAGE
EDE–3A	3.5	3.0	5.8	2000
EDE–04	4.0	3.0	5.8	
EDE–4A	4.5	3.0	5.8	
EDE–05	5.0	3.0	5.8	
EDE–5A	5.5	3.0	5.8	

Built–In Clamp Function

FOR ø5 4PIN LED				
PART NO	A	B	C	PACKAGE
EDE–06	6.0	3.0	5.8	2000
EDE–6A	6.5	3.0	5.8	
EDE–07	7.0	3.0	5.8	
EDE–7A	7.5	3.0	5.8	
EDE–08	8.0	3.0	5.8	
EDE–8A	8.5	3.0	5.8	
EDE–09	9.0	3.0	5.8	
EDE–10A	10.5	3.0	5.8	
EDE–11	11.0	3.0	5.8	
EDE–11A	11.5	3.0	5.8	
EDE–12A	12.5	3.0	5.8	
EDE–15	15.0	3.0	5.8	

LED 套 LED HOLDER 4-7-2

- MATERIAL: NYLON 66(UL)
- FLAME CLASS: 94V-0/94V-2
- COLOR: NATURAL

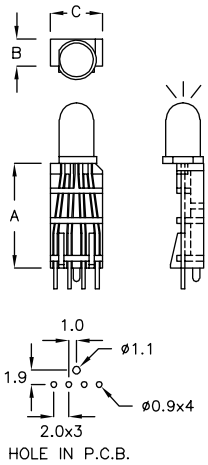

FOR ø5 4PIN LED				
PART NO	A	B	C	PACKAGE
EES–15	15.0	3.9	7.5	2000

LED 座 LED HOUSING 4-7-3

- MATERIAL: NYLON 66(UL)
- FLAME CLASS: 94V-0/94V-2
- COLOR: NATURAL,BLACK

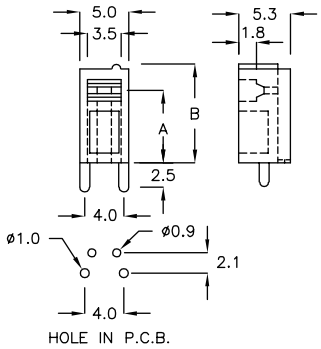

Built–In Clamp Function

FOR QUADRATE 2PIN LED			
PART NO	A	B	PACKAGE
EDF–09	9.0	11.7	1000

返回图片索引

LED 座 LED HOUSING 4-8-1

- MATERIAL: NYLON 66(UL)
- FLAME CLASS: 94V-0/94V-2
- COLOR: NATURAL,BLACK

FOR QUADRATE 2PIN LED			
PART NO	A	B	PACKAGE
EKL-01	4.4	1.27	1000

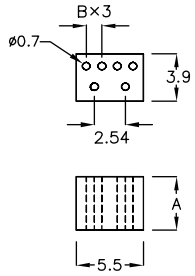

LED 座 LED HOUSING 4-8-2

- MATERIAL: NYLON 66(UL)
- FLAME CLASS: 94V-0/94V-2
- COLOR: BLACK

FOR QUADRATE 2PIN LED				
PART NO	A	B	FORM	PACKAGE
LEA-5	3.45	0	1	500
LEA-5A	3.45	4.3	2	
LEA-5C	3.45	2.8	2	

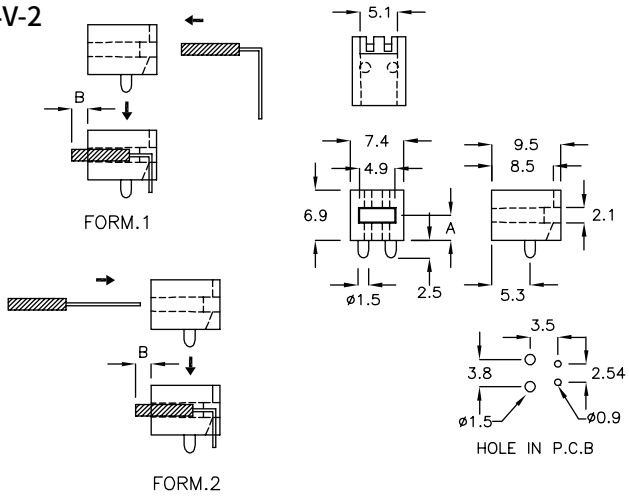

LED 座 LED HOUSING 4-8-3

- MATERIAL: NYLON 66(UL)
- FLAME CLASS: 94V-0/94V-2
- COLOR: BLACK

FOR QUADRATE 2 PIN LED		
PART NO	A	PACKAGE
2LEA-5	3.45	500

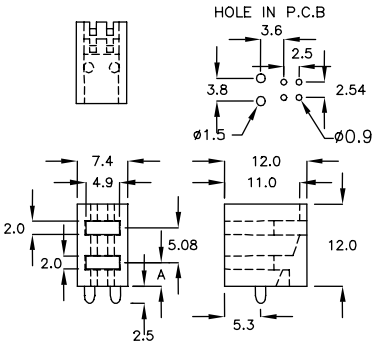

LED 座 LED HOUSING 4-8-4

- MATERIAL: NYLON 66(UL)
- FLAME CLASS: 94V-0/94V-2
- COLOR: NATURAL

Built-In Clamp Function

FOR QUADRATE 2 PIN LED		
PART NO	A	PACKAGE
2LEA-3AK	13.25	500

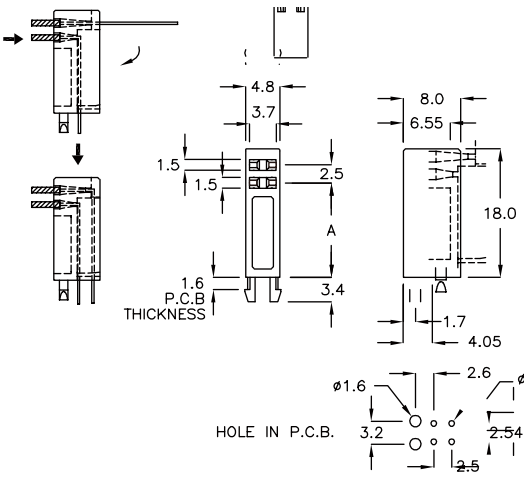

返回图片索引

LED 座 LED HOUSING 4-9-1

- MATERIAL: NYLON 66(UL)
- FLAME CLASS: 94V-0/94V-2
- COLOR: BLACK

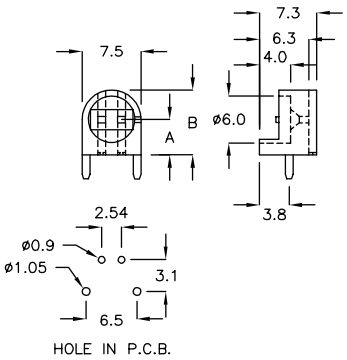

Built–In Clamp Function

FOR ø5 2PIN LED			
PART NO	A	B	PACKAGE
EDR–4A	4.5	8.2	1000

LED 座 LED HOUSING 4-9-2

- MATERIAL: NYLON 66(UL)
- FLAME CLASS: 94V-0/94V-2
- COLOR: BLACK

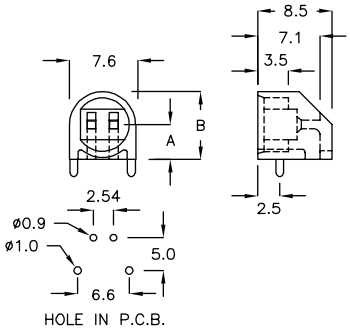

FOR ø5 2PIN LED			
PART NO	A	B	PACKAGE
EEL–4TQ	4.0	7.8	1000

LED 座 LED HOUSING 4-9-3

- MATERIAL: NYLON 66(UL)
- FLAME CLASS: 94V-0/94V-2
- COLOR: NATURAL,BLACK

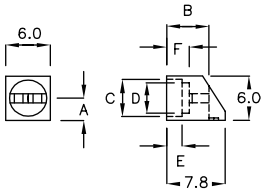

Built–In Clamp Function

FOR ø5 , ø3 2PIN LED							
PART NO	A	B	C	D	E	F	PACKAGE
LED–2F	3.0	5.6	ø5.0	ø4.1	2.0	3.5	1000

LED 座 LED HOUSING 4-9-4

- MATERIAL: NYLON 66(UL)
- FLAME CLASS: 94V-0/94V-2
- COLOR: BLACK

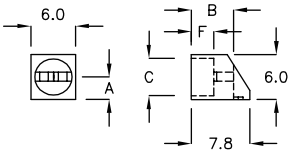

Built–In Clamp Function

FOR ø5 2PIN LED					
PART NO	A	B	C	F	PACKAGE
LED–3F	3.0	4.8	ø5.0	4.2	1000

LED 座 LED HOUSING 4-9-5

- MATERIAL: NYLON 66(UL)+GREEN LED
- FLAME CLASS: 94V-0/94V-2
- COLOR: BLACK

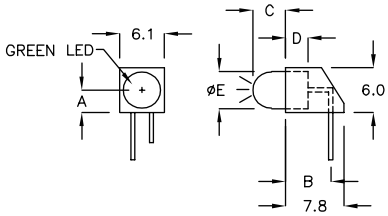

Built–In Clamp Function

FOR ø5 2 PIN LED						
PART NO	A	B	C	D	E	PACKAGE
LED–3F–10	3.0	5.6	3.5	4.2	4.9	500

返回图片索引

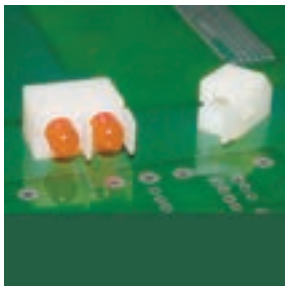

LED 座 LED HOUSING 4-10-1

- MATERIAL: NYLON 66(UL)
- FLAME CLASS: 94V-0/94V-2
- COLOR: NATURAL

Built–In Clamp Function

FOR ø5 2PIN LED				
PART NO	A	B	C	PACKAGE
LED–5F	4.3	8.4	8.6	1000

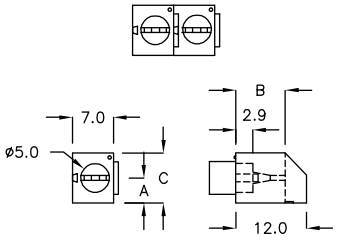

LED 座 LED HOUSING 4-10-2

- MATERIAL: NYLON 66(UL)
- FLAME CLASS: 94V-0/94V-2
- COLOR: NATURAL

FOR ø3 2PIN LED			
PART NO	A	B	PACKAGE
QLC–3F	3.9	7.0	2000

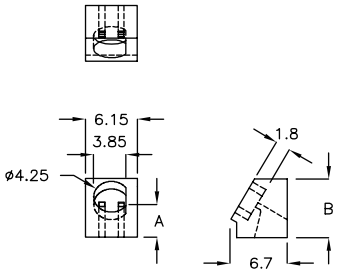

LED 座 LED HOUSING 4-10-3

- MATERIAL: NYLON 66(UL)
- FLAME CLASS: 94V-0/94V-2
- COLOR: NATURAL,BLACK

FOR ø5 2 PIN LED		
PART NO	A	PACKAGE
LEH5–4.5	4.5	1000
LEH5–6	6.0	
LEH5–7	7.0	
LEH5–8	8.0	
LEH5–9	9.0	
LEH5–10	10.0	

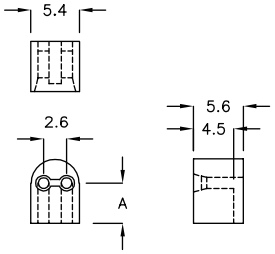

LED 座 LED HOUSING 4-10-4

- MATERIAL: NYLON 66(UL)
- FLAME CLASS: 94V-0/94V-2
- COLOR: NATURAL,BLACK

FOR ø5 2PIN LED				
PART NO	A	B	D	PACKAGE
LEH5–3T	3.0	2.5	ø1.0	1000
LEH5–4.5T	4.5	2.5	ø1.1	
LEH5–6T	6.0	2.5	ø1.0	
LEH5–7T	7.0			
LEH5–8T	8.0	2.9	ø1.0	
LEH5–9T	9.0			
LEH5–10T	10.0			
LEH5–12.5T	12.5			
LEH5–16T	16.0			

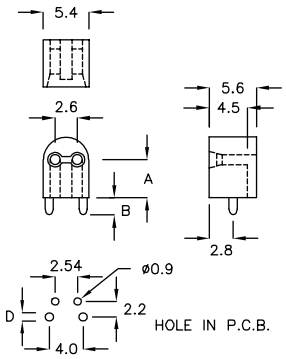

返回图片索引

LED 座 LED HOUSING 4-11-1

- MATERIAL: NYLON 66(UL)
- FLAME CLASS: 94V-0/94V-2
- COLOR: NATURAL

Built–In Clamp Function

FOR ø3 2PIN LED			
PART NO	A	B	PACKAGE
LJA–12A	12.5	5.4	500

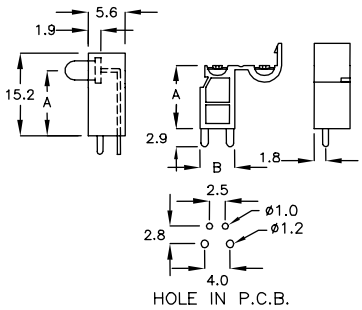

LED 座 LED HOUSING 4-11-2

- MATERIAL: NYLON 66(UL)
- FLAME CLASS: 94V-0/94V-2
- COLOR: BLACK

Built–In Clamp Function

FOR ø5 2PIN LED			
PART NO	A	B	PACKAGE
QLJ–18	18.0	8.1	500

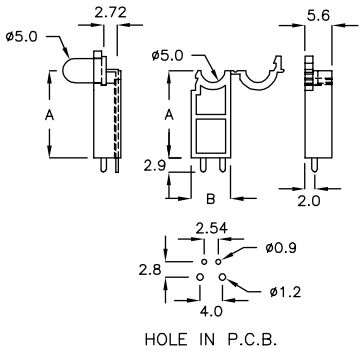

LED 座 LED HOUSING 4-11-3

- MATERIAL: NYLON 66(UL)
- FLAME CLASS: 94V-0/94V-2
- COLOR: BLACK

Built–In Clamp Function

FOR ø3 2PIN LED		
PART NO	A	PACKAGE
QQD–10A	10.9	500

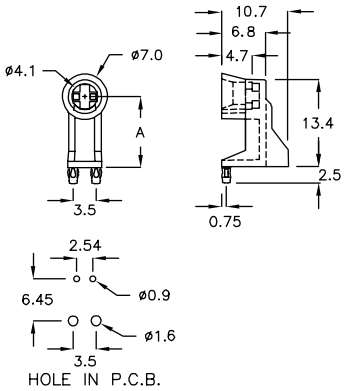

LED 座 LED HOUSING 4-11-4

- MATERIAL: NYLON 66(UL)
- FLAME CLASS: 94V-0/94V-2
- COLOR: BLACK

Built–In Clamp Function

FOR ø5 , ø3 2PIN LED									
PART NO	A	C	D	E	F	G	H	I	PACKAGE
LED–2C	3.0	ø5.0	ø4.1	2.7	4.2	3.2	6.0	3.3	1000
LED–2Y	3.0	ø5.0	ø4.1	2.0	3.0	3.2	6.0	3.4	

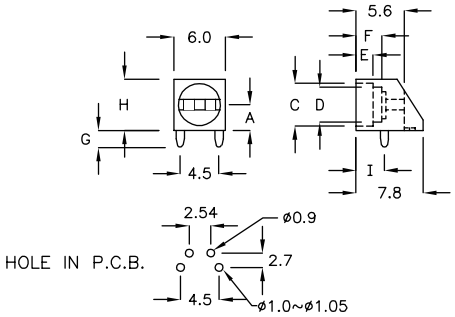

返回图片索引

LED 座 LED HOUSING 4-12-1

- MATERIAL: NYLON 66(UL)
- FLAME CLASS: 94V-0/94V-2
- COLOR: BLACK

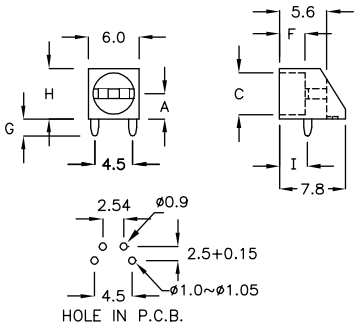

Built–In Clamp Function

FOR ø3 2PIN LED							
PART NO	A	C	F	G	H	I	PACKAGE
LED–3Y	4.0	ø4.1	1.4	2.5	7.0	3.3	1000
LED–3YK	4.0	ø3.3	1.4	2.5	7.0	3.3	
LED–4Y	3.0	ø4.1	1.4	1.5	6.0	3.3	

LED 座 LED HOUSING 4-12-2

- MATERIAL: NYLON 66(UL)
- FLAME CLASS: 94V-0/94V-2
- COLOR: BLACK

FOR ø5 2PIN LED		
PART NO	A	PACKAGE
LED–5Y	3.0	500

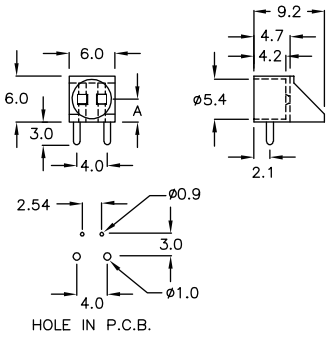

LED 座 LED HOUSING 4-12-3

- MATERIAL: NYLON 66(UL)
- FLAME CLASS: 94V-0/94V-2
- COLOR: BLACK

Built–In Clamp Function

FOR ø3 2PIN LED		
PART NO	A	PACKAGE
LED–4WK	4.0	1000

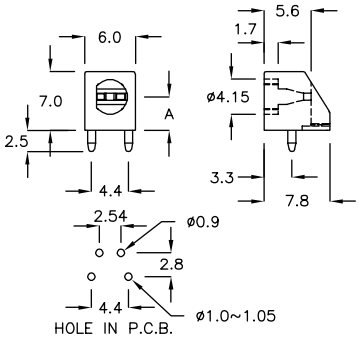

LED 座 LED HOUSING 4-12-4

- MATERIAL: NYLON 66(UL)
- FLAME CLASS: 94V-0/94V-2
- COLOR: NATURAL

Built–In Clamp Function

FOR ø5 2PIN LED		
PART NO	A	PACKAGE
ELA–01	3.0	500

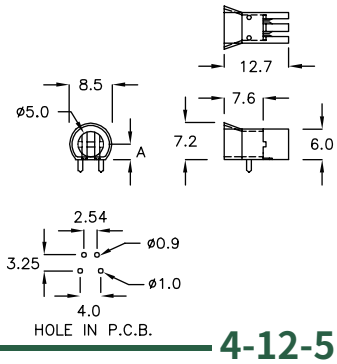

LED 座 LED HOUSING 4-12-5

- MATERIAL: NYLON 66(UL)
- FLAME CLASS: 94V-0/94V-2
- COLOR: NATURAL

FOR ø5 2PIN LED		
PART NO	A	PACKAGE
LED–10Y	10.0	500

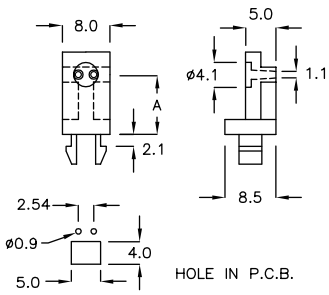

返回图片索引

LED 座 LED HOUSING 4-13-1

- MATERIAL: NYLON 66(UL)
- FLAME CLASS: 94V-0/94V-2
- COLOR: BLACK

FOR ø3 2PIN LED		
PART NO	A	PACKAGE
LEF5-5	5.1	1000

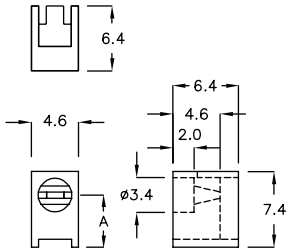

LED 座 LED HOUSING 4-13-2

- MATERIAL: NYLON 66(UL)
- FLAME CLASS: 94V-0/94V-2
- COLOR: BLACK

Built-In Clamp Function

FOR ø5 2PIN LED		
PART NO	A	PACKAGE
LEF-16HF	16.6	500

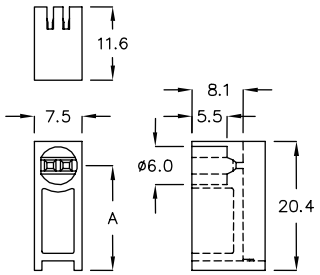

LED 座 LED HOUSING 4-13-3

- MATERIAL: NYLON 66(UL)
- FLAME CLASS: 94V-0/94V-2
- COLOR: BLACK

FOR ø3 2PIN LED			
PART NO	A	B	PACKAGE
LMD-5A	5.1	7.3	1000

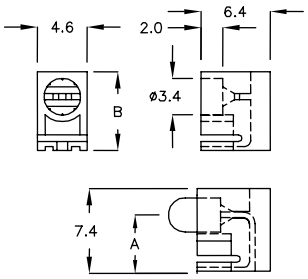

LED 座 LED HOUSING 4-13-4

- MATERIAL: NYLON 66(UL)
- FLAME CLASS: 94V-0/94V-2
- COLOR: BLACK

Built-In Clamp Function

FOR ø5 2PIN LED		
PART NO	A	PACKAGE
EEW-6A	6.35	1000

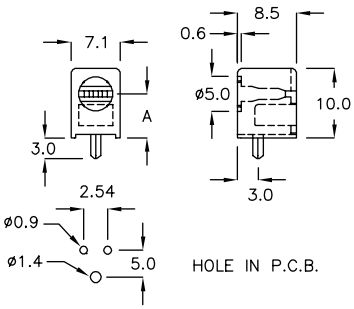

LED 座 LED HOUSING 4-13-5

- MATERIAL: NYLON 66(UL)
- FLAME CLASS: 94V-0/94V-2
- COLOR: NATURAL

Built-In Clamp Function

FOR ø3 2PIN LED		
PART NO	A	PACKAGE
LET3-4AK	4.0	1000

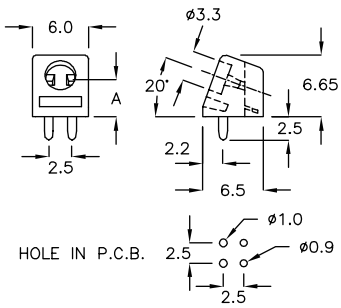

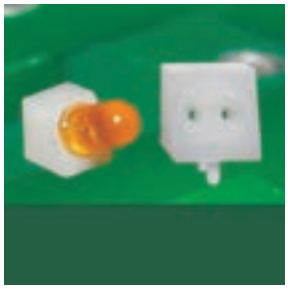

LED 座 LED HOUSING 4-14-1

- MATERIAL: NYLON 66(UL)
- FLAME CLASS: 94V-0/94V-2
- COLOR: NATURAL,BLACK

FOR ø5 2PIN LED		
PART NO	A	PACKAGE
LET5-3T	3.3	1000

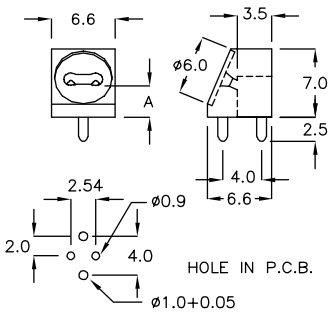

LED 座 LED HOUSING 4-14-2

- MATERIAL: NYLON 66(UL)
- FLAME CLASS: 94V-0/94V-2
- COLOR: BLACK

FOR ø5 2PIN LED		
PART NO	A	PACKAGE
LET5-4.5T	3.8	1000

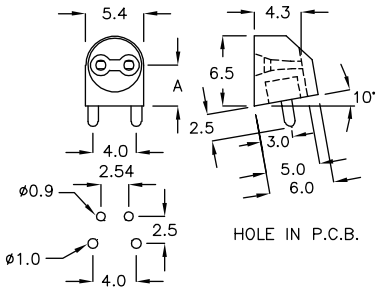

LED 座 LED HOUSING 4-14-3

- MATERIAL: NYLON 66(UL)
- FLAME CLASS: 94V-0/94V-2
- COLOR: BLACK

Built-In Clamp Function

FOR ø5 2PIN LED		
PART NO	A	PACKAGE
LET5-5A	6.4	1000

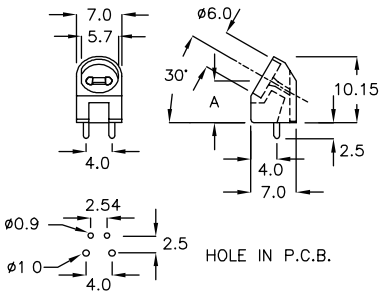

LED 座 LED HOUSING 4-14-4

- MATERIAL: NYLON 66(UL)
- FLAME CLASS: 94V-0/94V-2
- COLOR: BLACK

FOR ø5 2PIN LED		
PART NO	A	PACKAGE
LET5-06	5.0	1000

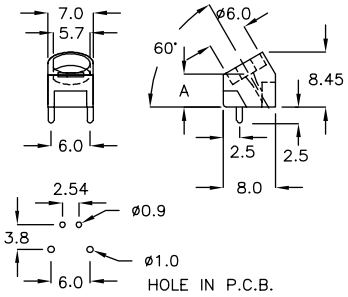

LED 座 LED HOUSING 4-14-5

- MATERIAL: NYLON 66(UL)
- FLAME CLASS: 94V-0/94V-2
- COLOR: BLACK

FOR ø5 2PIN LED		
PART NO	A	PACKAGE
LET5-2C	2.0	2000

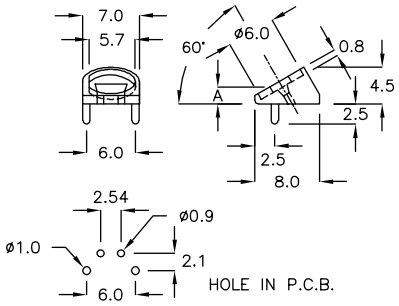

返回图片索引

LED 座 LED HOUSING 4-15-1

- MATERIAL: NYLON 66(UL)
- FLAME CLASS: 94V-0/94V-2
- COLOR: NATURAL,BLACK

Built–In Clamp Function

FOR ø5 2PIN LED		
PART NO	A	PACKAGE
LET5–4CK	4.0	1000

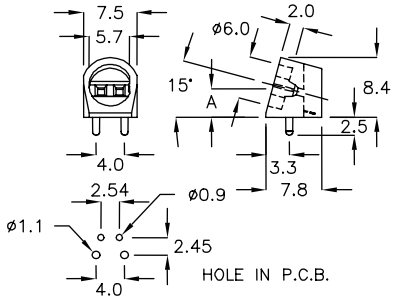

LED 座 LED HOUSING 4-15-2

- MATERIAL: NYLON 66(UL)
- FLAME CLASS: 94V-0/94V-2
- COLOR: BLACK

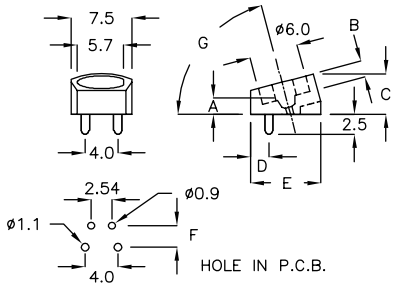

Built–In Clamp Function

FOR ø5 2PIN LED								
PART NO	A	B	C	D	E	F	G	PACKAGE
LET5–2DF	2.0	2.0	5.0	2.3	8.65	2.65	75°	1000
LET5–3MQ	3.0	2.0	7.25	3.35	8.85	3.9	45°	

LED 座 LED HOUSING 4-15-3

- MATERIAL: NYLON 66(UL)
- FLAME CLASS: 94V-0/94V-2
- COLOR: NATURAL

FOR ø3 2PIN LED			
PART NO	A	B	PACKAGE
QLC–3A	3.4	3.5	2000

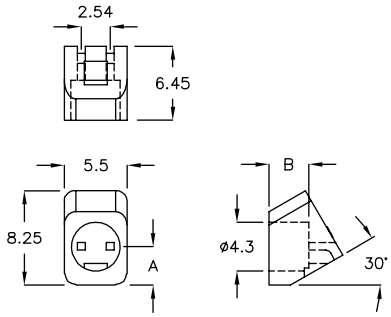

LED 座 LED HOUSING 4-15-4

- MATERIAL: NYLON 66(UL)
- FLAME CLASS: 94V-0/94V-2
- COLOR: NATURAL

FOR ø3 2PIN LED			
PART NO	A	B	PACKAGE
QLX–3K	3.4	3.5	1000

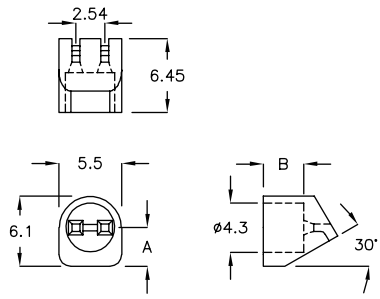

LED 座 LED HOUSING 4-15-5

- MATERIAL: NYLON 66(UL)
- FLAME CLASS: 94V-0/94V-2
- COLOR: BLACK

FOR ø3 2PIN LED			
PART NO	A	B	PACKAGE
EKF–1A	1.8	6.0	2000

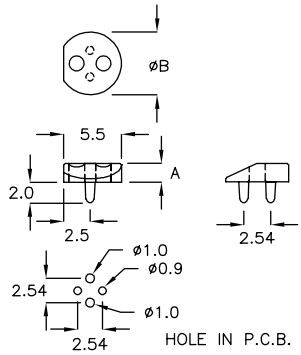

返回图片索引

LED 座 LED HOUSING 4-16-1

- MATERIAL: NYLON 66(UL)
- FLAME CLASS: 94V-0/94V-2
- COLOR: BLACK

Built–In Clamp Function

FOR ø3 3PIN LED			
PART NO	A	B	PACKAGE
EEN–3A	4.3	5.5	1000

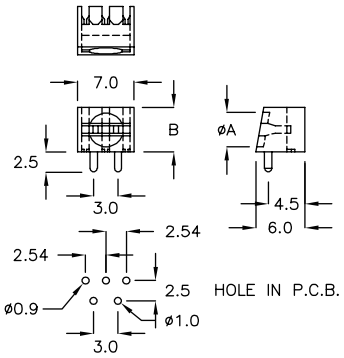

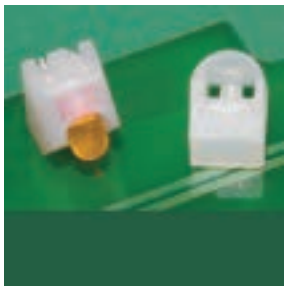

LED 座 LED HOUSING 4-16-2

- MATERIAL: NYLON 66(UL)
- FLAME CLASS: 94V-0/94V-2
- COLOR: NATURAL

FOR ø3 2PIN LED			
PART NO	A	B	PACKAGE
QLA–05	4.1	3.45	2000

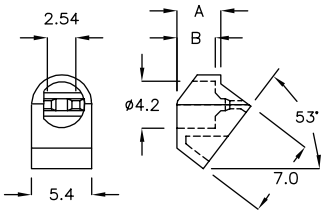

LED 座 LED HOUSING 4-16-3

- MATERIAL: NYLON 66(UL)
- FLAME CLASS: 94V-0/94V-2
- COLOR: BLACK

Built–In Clamp Function

FOR ø5 2PIN LED		
PART NO	A	PACKAGE
LEH5–4MT	4.5	500

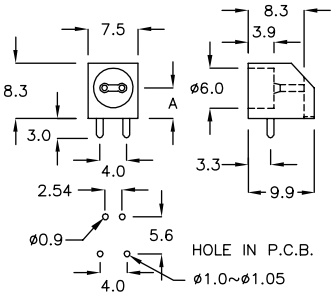

LED 座 LED HOUSING 4-16-4

- MATERIAL: NYLON 66(UL)
- FLAME CLASS: 94V-0/94V-2
- COLOR: BLACK

FOR ø3 2PIN LED		
PART NO	A	PACKAGE
EDT–7A	9.5	1000

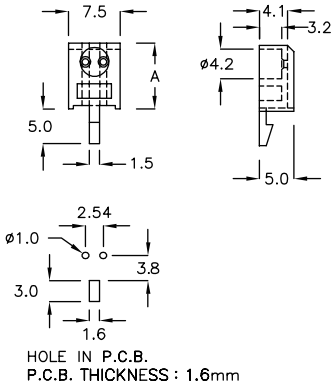

LED 座 LED HOUSING 4-16-5

- MATERIAL: NYLON 66(UL)
- FLAME CLASS: 94V-0/94V-2
- COLOR: NATURAL

Built–In Clamp Function

FOR ø3 2PIN LED							
PART NO	A	B	C	D	E	F	PACKAGE
LEM3–16	16.0	18.5	ø4.1	5.0	5.6	3.0	500
LEM4–16	16.0	18.6	ø4.2	5.1	5.7	2.0	

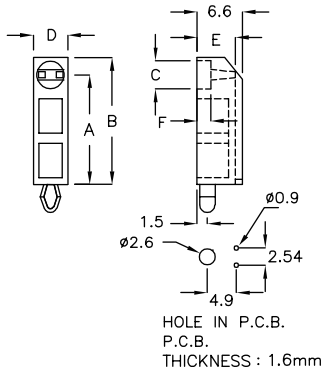

返回图片索引

LED 座 LED HOUSING 4-17-1

- MATERIAL: NYLON 66(UL)
- FLAME CLASS: 94V-0/94V-2
- COLOR: NATURAL

Built–In Clamp Function

FOR ø3 2PIN LED			
PART NO	A	B	PACKAGE
LEM4–20A	20.5	23.0	500

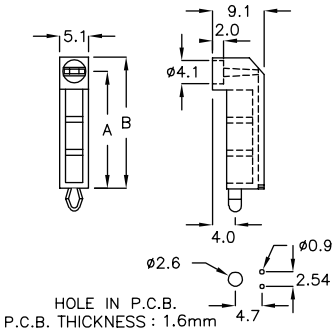

LED 座 LED HOUSING 4-17-2

- MATERIAL: NYLON 66(UL)
- FLAME CLASS: 94V-0/94V-2
- COLOR: NATURAL

Built–In Clamp Function

FOR ø3 2PIN LED			
PART NO	A	B	PACKAGE
EKC–20A	20.5	23.0	500

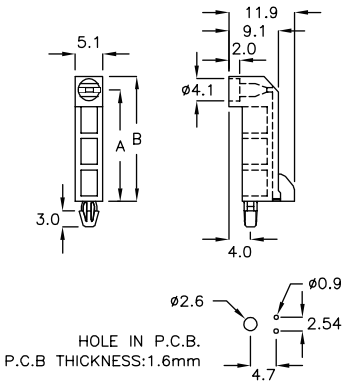

LED 座 LED HOUSING 4-17-3

- MATERIAL: NYLON 66(UL)
- FLAME CLASS: 94V-0/94V-2
- COLOR: NATURAL

Built–In Clamp Function

FOR QUADRATE 2PIN LED			
PART NO	A	B	PACKAGE
EDW–10	10.0	12.0	1000

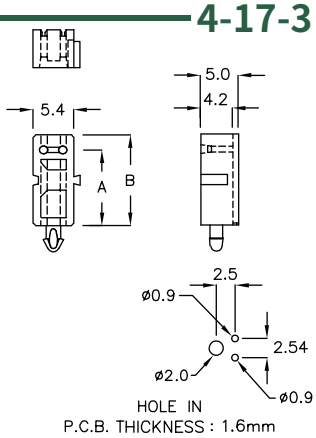

LED 座 LED HOUSING 4-17-4

- MATERIAL: NYLON 66(UL)
- FLAME CLASS: 94V-0/94V-2
- COLOR: NATURAL

Built–In Clamp Function

FOR ø5 3PIN LED		
PART NO	A	PACKAGE
LEX–18T	18.0	500

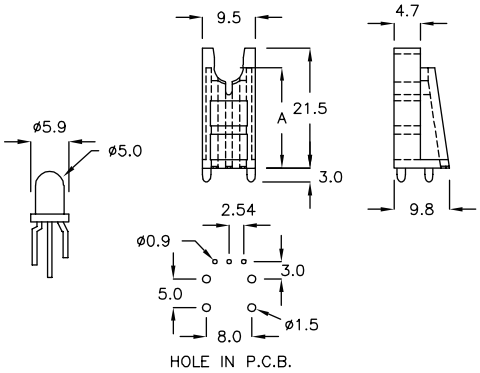

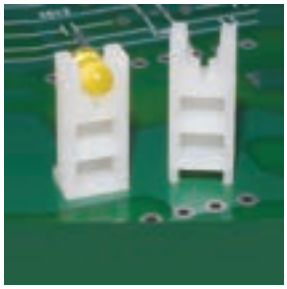

LED 座 LED HOUSING 4-17-5

- MATERIAL: NYLON 66(UL)
- FLAME CLASS: 94V-0/94V-2
- COLOR: NATURAL

Built–In Clamp Function

FOR ø5 2PIN LED			
PART NO	A	C	PACKAGE
LEW–18T	18.0	0.5	500
LEI–18T	18.0	0.3	

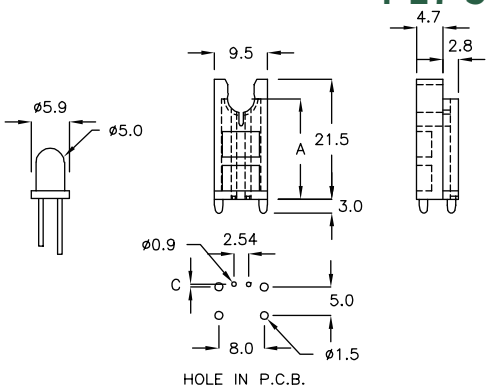

返回图片索引

LED 座 LED HOUSING 4-18-1

- MATERIAL: NYLON 66(UL)
- FLAME CLASS: 94V-0/94V-2
- COLOR: BLACK

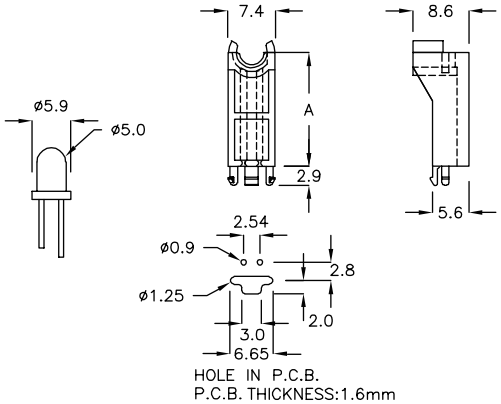

Built-In Clamp Function

FOR ø5 2PIN LED		
PART NO	A	PACKAGE
LJD-18	17.5	500

LED 座 LED HOUSING 4-18-2

- MATERIAL: NYLON 66(UL)
- FLAME CLASS: 94V-0/94V-2
- COLOR: NATURAL

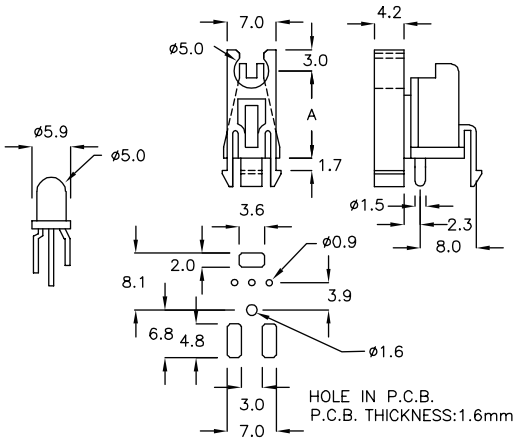

FOR ø5 3PIN LED		
PART NO	A	PACKAGE
LED-5AT	12.5	500

LED 座 LED HOUSING 4-18-3

- MATERIAL: NYLON 66(UL)
- FLAME CLASS: 94V-0/94V-2
- COLOR: NATURAL

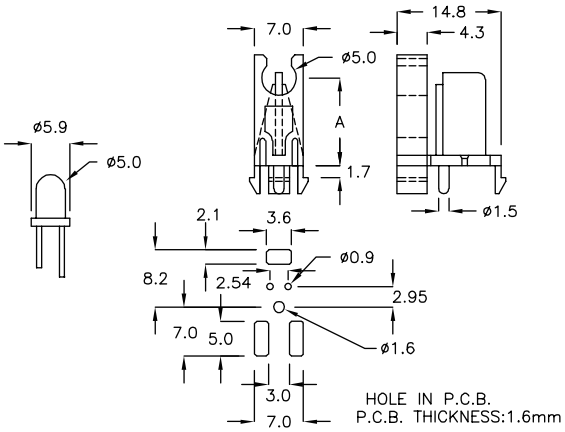

FOR ø5 2PIN LED		
PART NO	A	PACKAGE
LED-5BT	12.5	500

LED 座 LED HOUSING 4-18-4

- MATERIAL: NYLON 66(UL)
- FLAME CLASS: 94V-0/94V-2
- COLOR: NATURAL

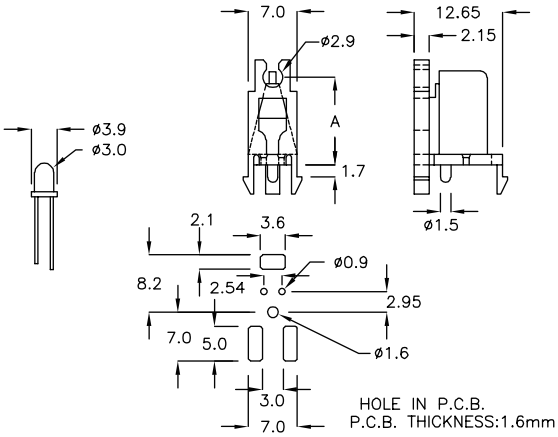

FOR ø3 2PIN LED		
PART NO	A	PACKAGE
LED-3BT	12.5	500

返回图片索引

LED 座 LED HOUSING 4-19-1

- MATERIAL: NYLON 66(UL)
- FLAME CLASS: 94V-0/94V-2
- COLOR: NATURAL

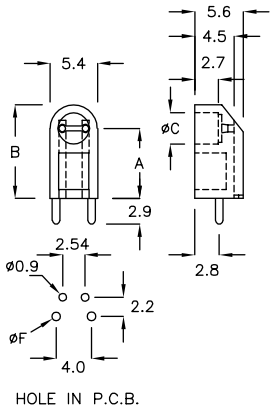

Built–In Clamp Function

FOR ø3 2PIN LED					
PART NO	A	B	C	F	PACKAGE
LEG3–6A	6.5	9.2	ø3.6	1.1	1000
LEG3–8T	8.0	10.7	ø3.6	1.0	
LEG3–10F	10.6	13.3	ø4.1	1.0	500
LEG3–11C	11.6	14.3	ø4.1	1.0	2000

LED 座 LED HOUSING 4-19-2

- MATERIAL: NYLON 66(UL)
- FLAME CLASS: 94V-0/94V-2
- COLOR: BLACK

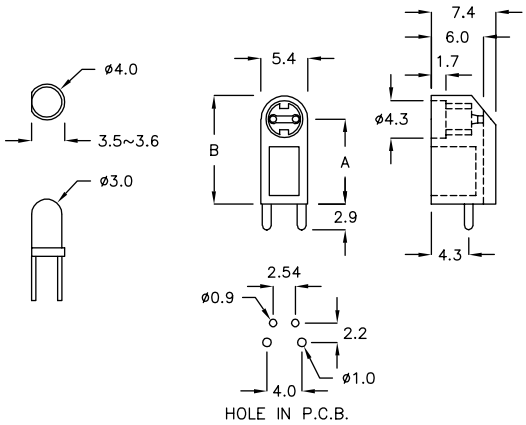

Built–In Clamp Function

FOR ø3 2PIN LED			
PART NO	A	B	PACKAGE
LEG3–9JQ	9.7	12.4	500

LED 座 LED HOUSING 4-19-3

- MATERIAL: NYLON 66(UL)
- FLAME CLASS: 94V-0/94V-2
- COLOR: BLACK

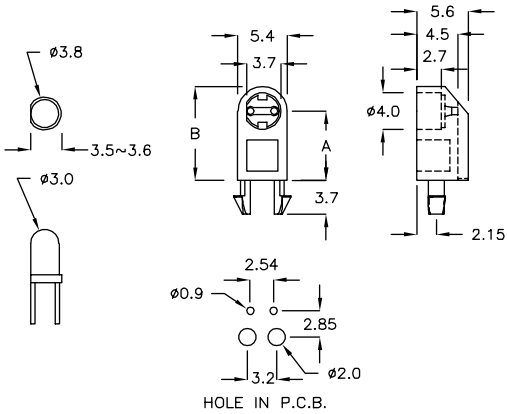

Built–In Clamp Function

FOR ø3 2PIN LED			
PART NO	A	B	PACKAGE
LEG3–7ML	7.5	10.2	1000

LED 座 LED HOUSING 4-19-4

- MATERIAL: NYLON 66(UL)
- FLAME CLASS: 94V-0/94V-2
- COLOR: NATURAL,BLACK

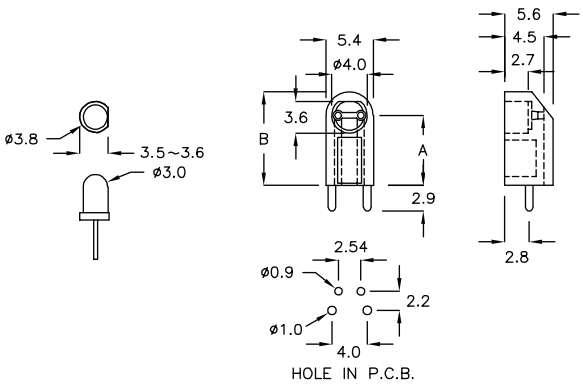

Built–In Clamp Function

FOR ø3 2PIN LED			
PART NO	A	B	PACKAGE
LEG3–10NQ	10.6	13.3	500

返回图片索引

LED 座 LED HOUSING 4-20-1

- MATERIAL: NYLON 66(UL)
- FLAME CLASS: 94V-0/94V-2
- COLOR: NATURAL

Built–In Clamp Function

FOR ø5 2PIN LED			
PART NO	A	B	PACKAGE
EDJ–12	12.0	15.8	500

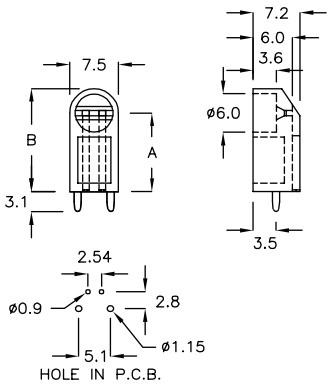

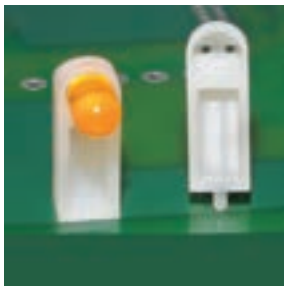

LED 座 LED HOUSING 4-20-2

- MATERIAL: NYLON 66(UL)
- FLAME CLASS: 94V-0/94V-2
- COLOR: NATURAL

Built–In Clamp Function

FOR ø5 2PIN LED			
PART NO	A	B	PACKAGE
EEM–14A	14.5	17.75	500

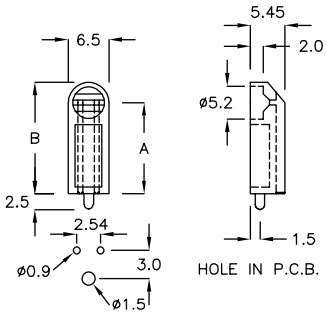

LED 座 LED HOUSING 4-20-3

- MATERIAL: NYLON 66(UL)
- FLAME CLASS: 94V-0/94V-2
- COLOR: NATURAL

Built–In Clamp Function

FOR ø5 2PIN LED		
PART NO	A	PACKAGE
EEH–9A	10.0	2000

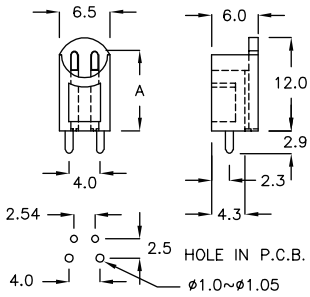

LED 座 LED HOUSING 4-20-4

- MATERIAL: NYLON 66(UL)
- FLAME CLASS: 94V-0/94V-2
- COLOR: BLACK

FOR ø5 2PIN LED			
PART NO	A	B	PACKAGE
LEH5–19K	19.0	21.7	1000

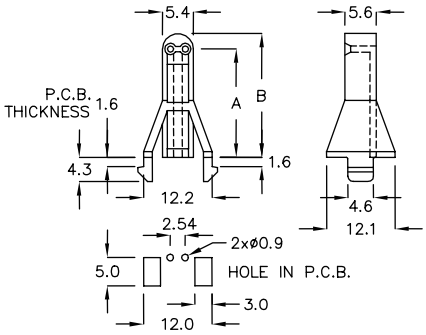

LED 座 LED HOUSING 4-20-5

- MATERIAL: NYLON 66(UL)
- FLAME CLASS: 94V-0/94V-2
- COLOR: BLACK

FOR ø3 2PIN LED			
PART NO	A	B	PACKAGE
EEC–03	3.05	5.6	1000

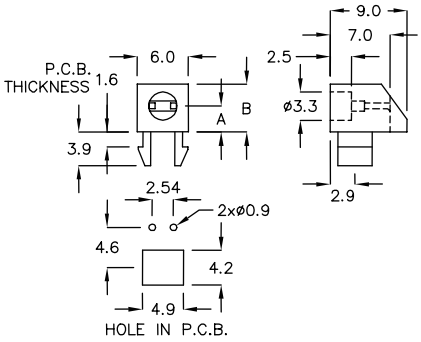

返回图片索引

LED 座 LED HOUSING 4-21-1

- MATERIAL: NYLON 66(UL)
- FLAME CLASS: 94V-0/94V-2
- COLOR: BLACK

Built–In Clamp Function

FOR ø3 2PIN LED				
PART NO	A	B	C	PACKAGE
EEK–6A	6.1	9.1	5.2	1000

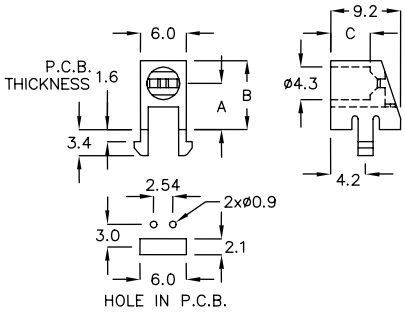

LED 座 LED HOUSING 4-21-2

- MATERIAL: NYLON 66(UL)
- FLAME CLASS: 94V-0/94V-2
- COLOR: NATURAL

Built–In Clamp Function

FOR ø5 3PIN LED			
PART NO	A	B	PACKAGE
EDL–03	3.0	7.0	1000

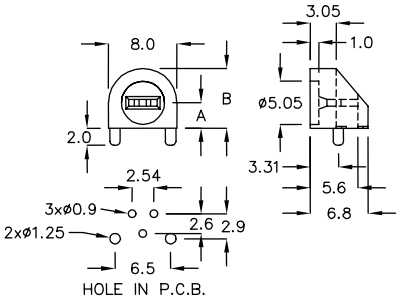

LED 座 LED HOUSING 4-21-3

- MATERIAL: NYLON 66(UL)
- FLAME CLASS: 94V-0/94V-2
- COLOR: BLACK

Built–In Clamp Function

FOR ø3 2PIN LED				
PART NO	A	B	C	PACKAGE
EKN–05A	3.0	10.0	2.0	500

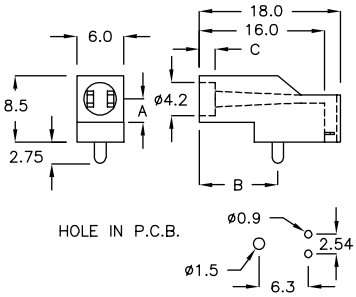

LED 座 LED HOUSING 4-21-4

- MATERIAL: NYLON 66(UL)
- FLAME CLASS: 94V-0/94V-2
- COLOR: BLACK

Built–In Clamp Function

FOR ø5 2PIN LED		
PART NO	A	PACKAGE
QQR–7A	7.0	500

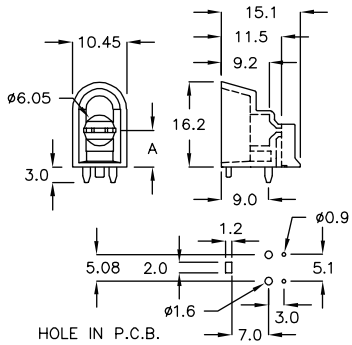

LED 座 LED HOUSING 4-21-5

- MATERIAL: NYLON 66(UL)
- FLAME CLASS: 94V-0/94V-2
- COLOR: BLACK

Built–In Clamp Function

FOR ø3 3PIN LED			
PART NO	A	B	PACKAGE
EDC–05	5.0	8.2	1000

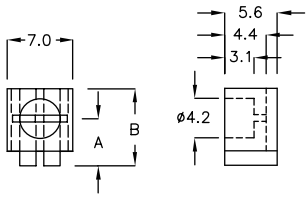

LED 座 LED HOUSING 4-22-1

- MATERIAL: NYLON 66(UL)
- FLAME CLASS: 94V-0/94V-2
- COLOR: BLACK

FOR ø3 2PIN LED			
PART NO	A	B	PACKAGE
EKT-4C	4.0	6.3	2000

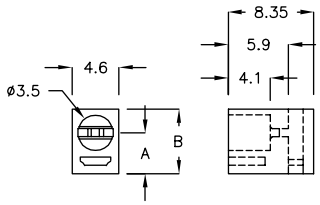

LED 座 LED HOUSING 4-22-2

- MATERIAL: NYLON 66(UL)
- FLAME CLASS: 94V-0/94V-2
- COLOR: BLACK

Built-In Clamp Function

FOR ø3 3PIN LED			
PART NO	A	B	PACKAGE
EKB-04	4.0	6.6	1000

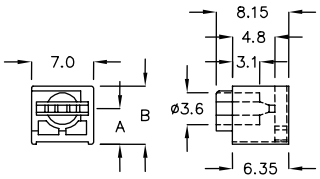

LED 座 LED HOUSING 4-22-3

- MATERIAL: NYLON 66(UL)
- FLAME CLASS: 94V-0/94V-2
- COLOR: BLACK

FOR ø5 3PIN LED			
PART NO	A	B	PACKAGE
LER-4	4.0	8.0	1000

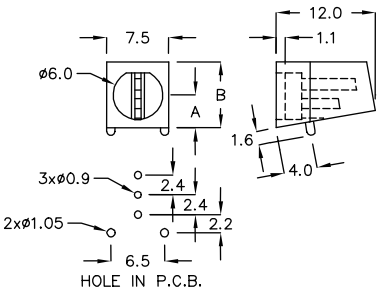

LED 座 LED HOUSING 4-22-4

- MATERIAL: NYLON 66(UL)
- FLAME CLASS: 94V-0/94V-2
- COLOR: BLACK

FOR ø5 2PIN LED			
PART NO	A	B	PACKAGE
LEKC-5A	4.0	7.6	500

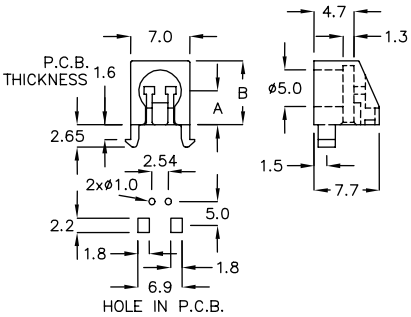

LED 座 LED HOUSING 4-22-5

- MATERIAL: NYLON 66(UL)
- FLAME CLASS: 94V-0/94V-2
- COLOR: BLACK

FOR ø5 3PIN LED			
PART NO	A	B	PACKAGE
LEK5-5TX	4.6	8.1	500

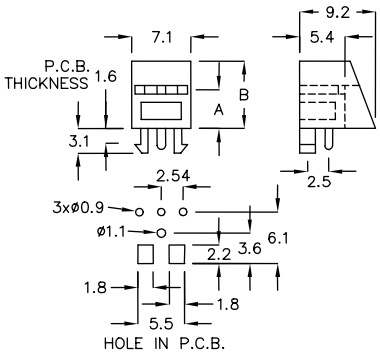

返回图片索引

LED 座 LED HOUSING 4-23-1

- MATERIAL: NYLON 66(UL)
- FLAME CLASS: 94V-0/94V-2
- COLOR: NATURAL

FOR ø5 3PIN LED			
PART NO	A	B	PACKAGE
EDA-11	16.0	20.0	500

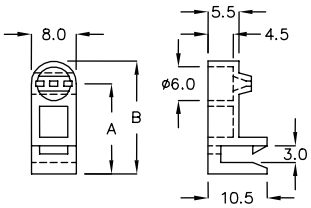

LED 座 LED HOUSING 4-23-2

- MATERIAL: NYLON 66(UL)
- FLAME CLASS: 94V-0/94V-2
- COLOR: NATURAL

FOR ø3 3PIN LED			
PART NO	A	B	PACKAGE
EDM-05	5.0	8.2	1000

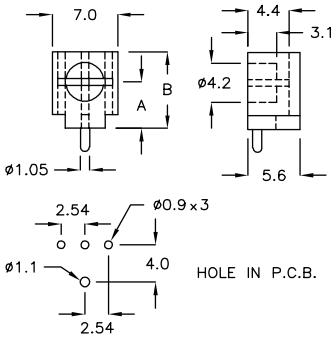

LED 座 LED HOUSING 4-23-3

- MATERIAL: NYLON 66(UL)
- FLAME CLASS: 94V-0/94V-2
- COLOR: BLACK

Built-In Clamp Function

FOR ø3 3PIN LED			
PART NO	A	B	PACKAGE
EDM-5C	5.0	8.2	1000

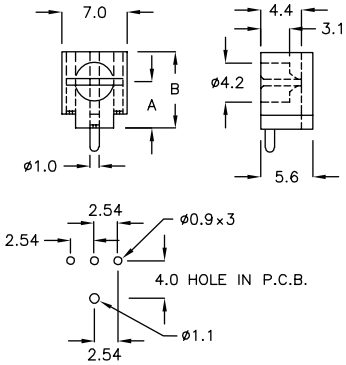

LED 座 LED HOUSING 4-23-4

- MATERIAL: NYLON 66(UL)
- FLAME CLASS: 94V-0/94V-2
- COLOR: NATURAL

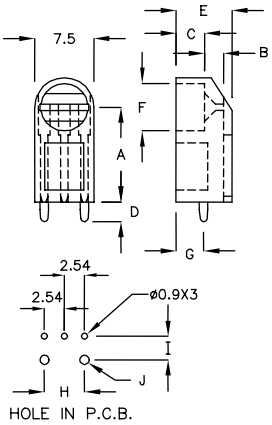

Built-In Clamp FUNCTION

FOR ø5 3PIN LED											
PART NO	A	B	C	D	E	F	G	H	I	J	PACKAGE
LEE-12	12.0	2.5	3.6	3.1	7.1	ø6.0	3.5	5.08	3.0	ø1.2	500
LEK2-10T	9.5	2.0	4.0	3.0	7.1	ø6.1	3.5	5.08	3.0	ø1.2	
LEK2-12T	12.0	2.5	3.6	2.5	7.1	ø6.0	3.5	5.08	3.0	ø1.2	
LEK2-13T	13.5	2.1	3.9	2.5	7.1	ø6.0	3.8	6.5	2.7	ø1.05	
LEK2-18T	17.5	2.4	3.6	3.0	7.0	ø6.0	3.5	5.08	3.0	ø1.2	
LEK4-4T	4.0	4.6	1.0	3.0	6.6	ø6.2	3.8	6.5	2.5	ø1.05	1000

返回图片索引

LED 座 LED HOUSING 4-24-1

- MATERIAL: NYLON 66(UL)
- FLAME CLASS: 94V-0/94V-2
- COLOR: BLACK

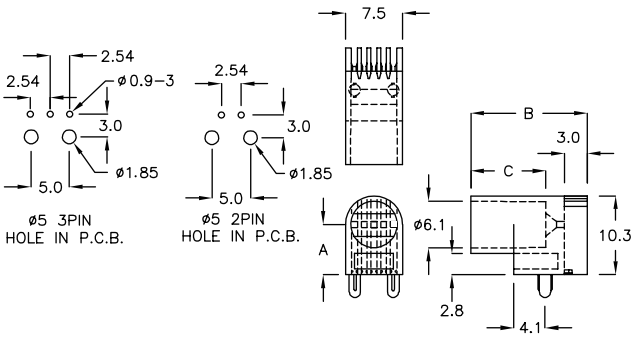

Built-In Clamp Function

FOR ø5 2PIN & ø5 3PIN LED				
PART NO	A	B	C	PACKAGE
QLT-6A	6.55	14.0	8.6	500
QLT-6C	6.55	14.0	6.1	

LED 座 LED HOUSING 4-24-2

- MATERIAL: NYLON 66(UL)
- FLAME CLASS: 94V-0/94V-2
- COLOR: BLACK

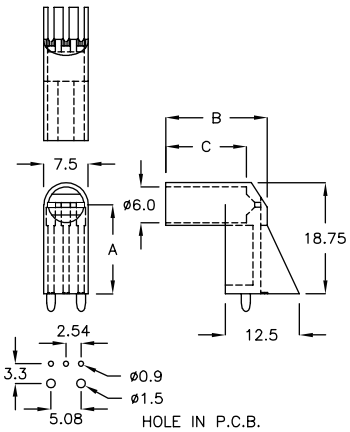

Built-In Clamp Function

FOR ø5 3PIN LED LAMP				
PART NO	A	B	C	PACKAGE
QLU-15	15.0	17.1	13.6	500

LED 座 LED HOUSING 4-24-3

- MATERIAL: NYLON 66(UL)
- FLAME CLASS: 94V-0/94V-2
- COLOR: BLACK

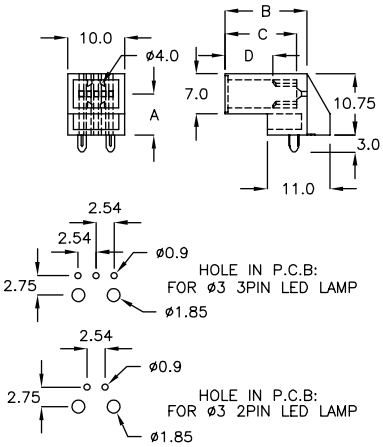

Built-In Clamp Function

FOR ø3 3PIN, 2PIN LED LAMP					
PART NO	A	B	C	D	PACKAGE
QBT-7A	7.25	14.4	12.6	8.4	500
QBT-7C	7.25	14.4	7.6	3.4	
QBT-7D	7.25	14.4	6.6	2.4	
QBT-7F	7.25	8.4	6.6	2.4	
QBT-7K	7.25	13.4	11.6	7.4	

LED 座 LED HOUSING 4-24-4

- MATERIAL: NYLON 66(UL)
- FLAME CLASS: 94V-0/94V-2
- COLOR: BLACK

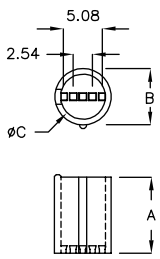

FOR ø5 3PIN, 2PIN LED				
PART NO	A	B	C	PACKAGE
LEA-01	10.0	ø7.4	ø6.0	2000

返回图片索引

LED 座 LED HOUSING 4-25-1

- MATERIAL: NYLON 66(UL)
- FLAME CLASS: 94V-0/94V-2
- COLOR: BLACK

FOR ø5 3PIN LED							
PART NO	A	B	C	D	E	F	PACKAGE
LEK2-4.5T	4.5	2.1	4.0	7.1	3.2	2.8	1000
LEK4-4.5T	4.5	4.5	1.0	6.5	2.0	2.0	

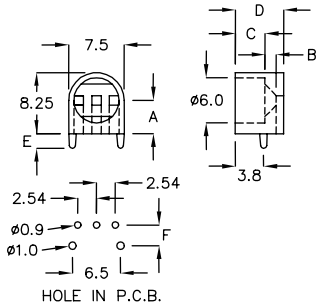

LED 座 LED HOUSING 4-25-2

- MATERIAL: NYLON 66(UL)
- FLAME CLASS: 94V-0/94V-2
- COLOR: NATURAL

Built-In Clamp Function

FOR ø5 3PIN LED								
PART NO	A	B	C	D	E	F	G	PACKAGE
LEU-06	6.0	10.0	ø1.0	4.3	2.6	6.0	ø6.2	500
LEU-09	9.0	13.0	ø1.2	3.5	2.5	5.5	ø6.0	
LEU-10	10.0	14.0	ø1.0	4.0	2.6	5.5	ø6.0	

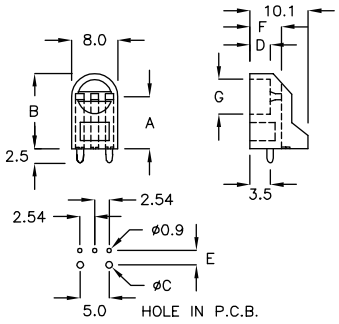

LED 座 LED HOUSING 4-25-3

- MATERIAL: NYLON 66(UL)
- FLAME CLASS: 94V-0/94V-2
- COLOR: NATURAL,BLACK

FOR ø5 3PIN LED									
PART NO	A	B	C	D	F	G	H	J	PACKAGE
LEK4-3T	3.0	4.0	1.0	5.0	3.0	3.0	ø1.2	6.0	1000
LEY-03	3.5	4.0	1.0	5.0	3.0	2.7	ø1.2	6.5	

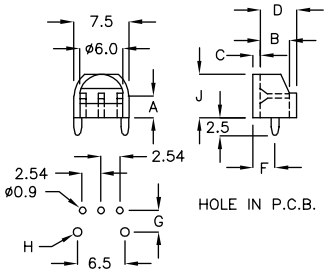

LED 座 LED HOUSING 4-25-4

- MATERIAL: NYLON 66(UL)
- FLAME CLASS: 94V-0/94V-2
- COLOR: NATURAL,BLACK

Built-In Clamp Function

FOR ø5 3PIN LED									
PART NO	A	B	C	D	F	G	H	J	PACKAGE
LEK4-3TW	3.0	4.0	1.0	5.0	3.0	3.0	ø1.2	6.0	1000

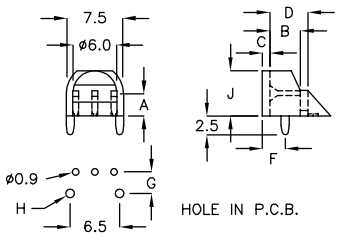

返回图片索引

LED 座 LED HOUSING 4-26-1

- MATERIAL: NYLON 66(UL)
- FLAME CLASS: 94V-0/94V-2
- COLOR: BLACK

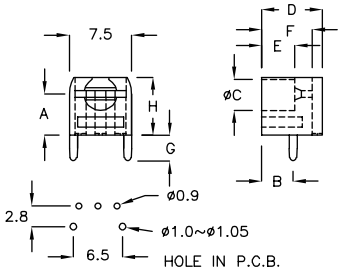

Built–In Clamp Function

FOR Ø3 3PIN LED									
PART NO	A	B	C	D	E	F	G	H	PACKAGE
EKM–05	5.0	3.8	4.0	7.3	4.0	6.1	3.1	7.0	1000

LED 座 LED HOUSING 4-26-2

- MATERIAL: NYLON 66(UL)
- FLAME CLASS: 94V-0/94V-2
- COLOR: NATURAL,BLACK

FOR Ø5 3PIN LED			
PART NO	A	B	PACKAGE
LEK4–2T	3.0	4.0	1000

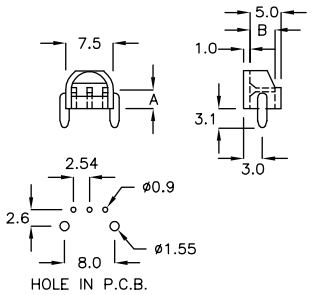

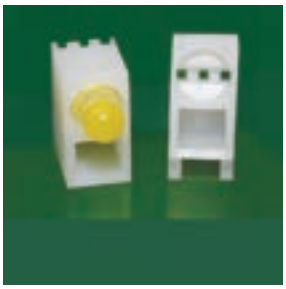

LED 座 LED HOUSING 4-26-3

- MATERIAL: NYLON 66(UL)
- FLAME CLASS: 94V-0/94V-2
- COLOR: NATURAL

Built–In Clamp Function

FOR Ø5 3PIN LED			
PART NO	A	B	PACKAGE
LEC–01	9.2	13.5	1000

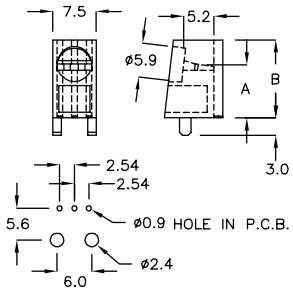

LED 座 LED HOUSING 4-26-4

- MATERIAL: NYLON 66(UL)
- FLAME CLASS: 94V-0/94V-2
- COLOR: NATURAL

Built–In Clamp Function

FOR Ø3 3PIN LED			
PART NO	A	B	PACKAGE
EEB–09	9.0	12.0	500

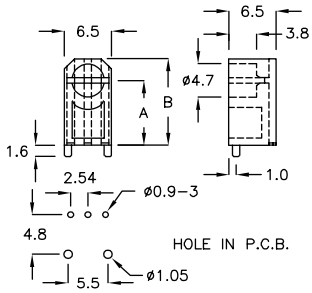

LED 座 LED HOUSING 4-26-5

- MATERIAL: NYLON 66(UL)
- FLAME CLASS: 94V-0/94V-2
- COLOR: NATURAL,BLACK

Built–In Clamp Function

FOR Ø3 3PIN LED			
PART NO	A	B	PACKAGE
EEB–10	10.0	13.0	500

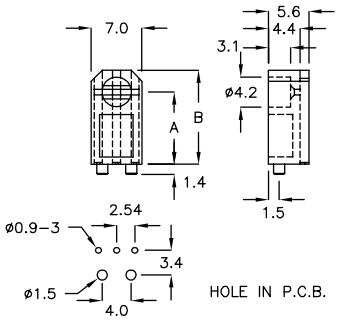

返回图片索引

LED 座 LED HOUSING 4-27-1

- MATERIAL: NYLON 66(UL)
- FLAME CLASS: 94V-0/94V-2
- COLOR: NATURAL

FOR ø5 3PIN LED		
PART NO	A	PACKAGE
EDQ-07	7.0	1000

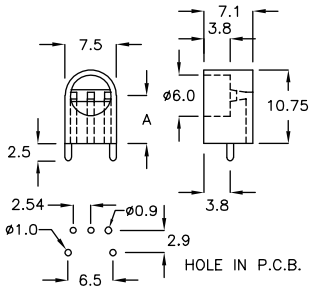

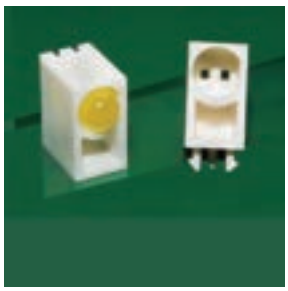

LED 座 LED HOUSING 4-27-2

- MATERIAL: NYLON 66(UL)
- FLAME CLASS: 94V-0/94V-2
- COLOR: NATURAL

Built-In Clamp Function

FOR ø5 2PIN LED		
PART NO	A	PACKAGE
EEJ-09	9.0	500

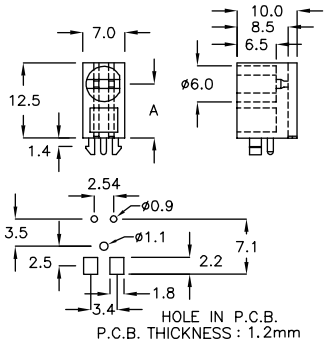

LED 座 LED HOUSING 4-27-3

- MATERIAL: NYLON 66(UL)
- FLAME CLASS: 94V-0/94V-2
- COLOR: NATURAL

Built-In Clamp Function

FOR ø5 3PIN LED			
PART NO	A	B	PACKAGE
EEF-17	17.0	20.9	500

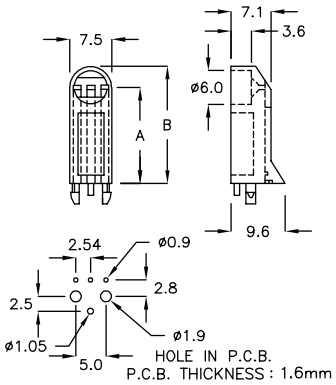

LED 座 LED HOUSING 4-27-4

- MATERIAL: NYLON 66(UL)
- FLAME CLASS: 94V-0/94V-2
- COLOR: NATURAL

Built-In Clamp Function

FOR ø5 3PIN LED			
PART NO	A	B	PACKAGE
EEF-18A	18.7	22.4	500
EEF-18C	18.4	22.1	

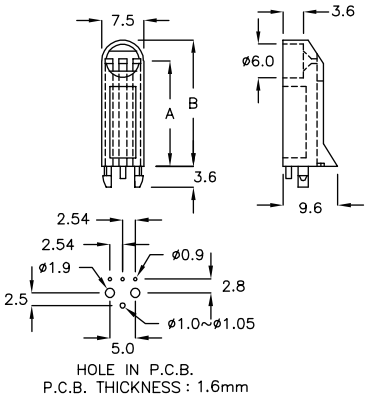

返回图片索引

LED 座 LED HOUSING 4-28-1

- MATERIAL: NYLON 66(UL)
- FLAME CLASS: 94V-0/94V-2
- COLOR: NATURAL

FOR ø5 3PIN LED					
PART NO	A	B	C	D	PACKAGE
LEK2-7TX	7.0	10.8	ø6.2	9.5	500
LEK2-10TX	10.0	13.8	ø6.0	12.1	
LEK2-13TX	13.5	17.3	ø6.0	12.1	

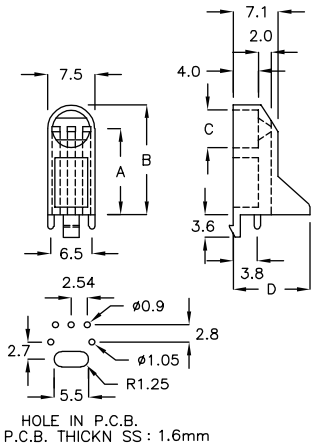

LED 座 LED HOUSING 4-28-2

- MATERIAL: NYLON 66(UL)
- FLAME CLASS: 94V-0/94V-2
- COLOR: NATURAL

Built-In Clamp Function

FOR ø5 3PIN LED					
PART NO	A	B	C	D	PACKAGE
LEK2-5TW	5.0	8.75	ø1.5 ~ ø1.6	3.0	1000
LEK2-6TW	6.0	9.95			
LEK2-7TW	7.0	10.75		3.0	500
LEK2-8TW	8.0	11.75			
LEK2-9TW	9.0	12.75			
LEK2-11TW	11.0	14.75			
LEK2-14TW	14.0	17.75			
LEK2-15TW	15.0	18.75			
LEK2-16TW	16.0	19.75			
LEK2-17TW	17.0	20.75			
LEK2-18TW	17.5	21.25	ø1.2	3.0	
LEK2-18LTW	18.0	21.75	ø1.5 ~ ø1.6	3.0	500
LEK2-19TW	19.0	22.75			
LEK2-20TW	20.0	23.75			
LEK2-11MTW	11.5	15.45	ø1.2	2.5	
LEN-05	5.0	8.75	ø1.0	3.0	1000

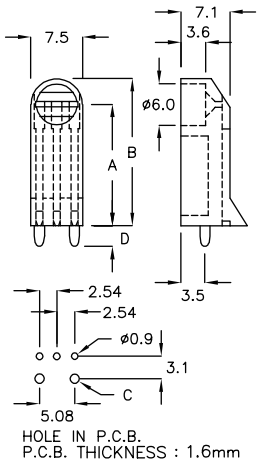

LED 座 LED HOUSING 4-28-3

- MATERIAL: NYLON 66(UL)
- FLAME CLASS: 94V-0/94V-2
- COLOR: NATURAL

Built-In Clamp Function

FOR ø5 3PIN LED			
PART NO	A	B	PACKAGE
LEK2-17TP	17.0	20.75	500

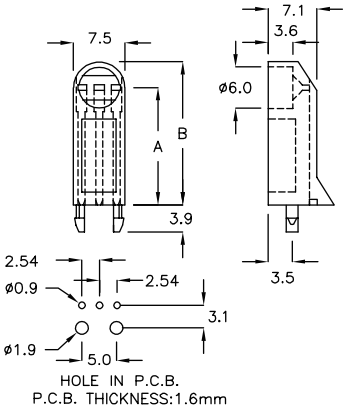

返回图片索引

LED 座 LED HOUSING 4-29-1

- MATERIAL: NYLON 66(UL)
- FLAME CLASS: 94V-0/94V-2
- COLOR: NATURAL

Built–In Clamp Function

FOR ø5 4PIN LED			
PART NO	A	B	PACKAGE
LEW–17D	17.0	21.5	500
LEW–18A	18.0	22.5	

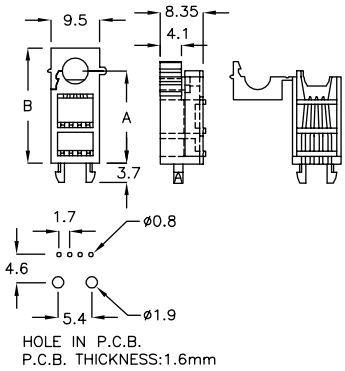

LED 座 LED HOUSING 4-29-2

- MATERIAL: NYLON 66(UL)
- FLAME CLASS: 94V-0/94V-2
- COLOR: BLACK

FOR ø3 2PIN LED				
PART NO	A	B	C	PACKAGE
QLY–2A	11.45	8.0	12.8	500
QLY–7K	9.95	6.5	11.3	1000

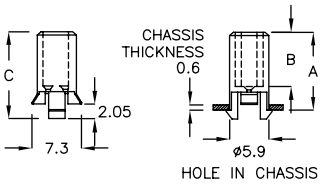

LED 座 LED HOUSING 4-29-3

- MATERIAL: NYLON 66(UL)
- FLAME CLASS: 94V-0/94V-2
- COLOR: BLACK

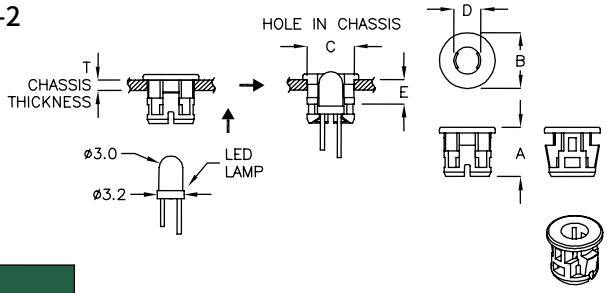

FOR ø3 2PIN LED							
PART NO	A	B	C HOLE IN CHASSIS	D	E	T CHASSIS THICKNESS	PACKAGE
CLED–3S	5.3	ø6.0	ø5.2	ø2.9	2.75	1.2	2000

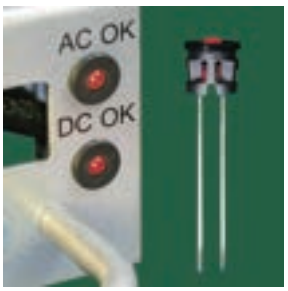

LED 座 LED HOUSING 4-29-4

- MATERIAL: NYLON 66(UL)
- FLAME CLASS: 94V-0/94V-2
- COLOR: BLACK

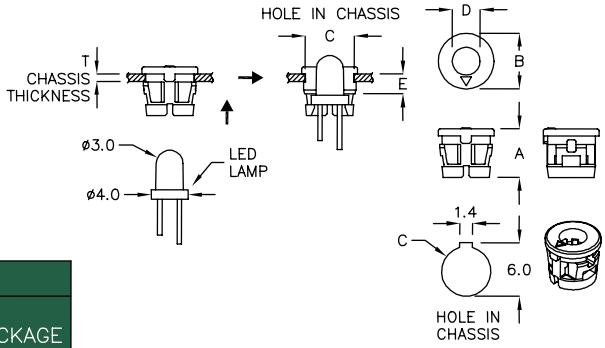

FOR ø3 2PIN LED							
PART NO	A	B	C HOLE IN CHASSIS	D	E	T CHASSIS THICKNESS	PACKAGE
KLED–3FM	5.4	ø6.2	ø5.5	ø3.1	2.2	0.8	2000

返回图片索引

LED 座 LED HOUSING 4-30-1

- MATERIAL: NYLON 66(UL)
- FLAME CLASS: 94V-0/94V-2
- COLOR: BLACK

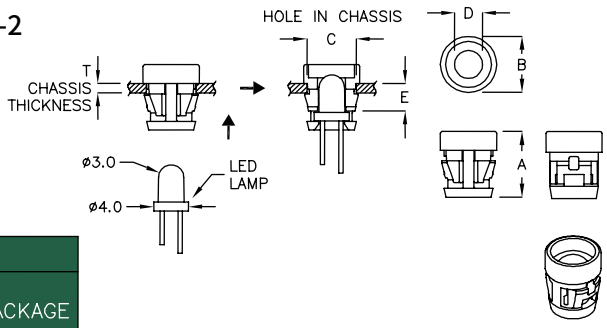

FOR ø3 2PIN LED							
PART NO	A	B	C HOLE IN CHASSIS	D	E	T CHASSIS THICKNESS	PACKAGE
KLED-3DQ	6.7	ø5.6	ø4.95	ø3.1	2.2	0.8	2000

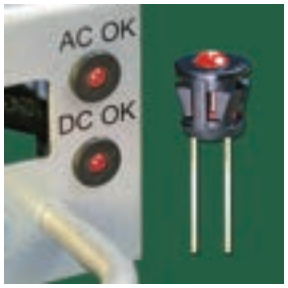

LED 座 LED HOUSING 4-30-2

- MATERIAL: NYLON 66(UL)
- FLAME CLASS: 94V-0/94V-2
- COLOR: BLACK

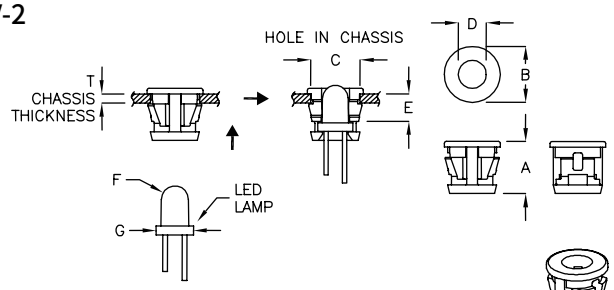


FORM.1


FORM.2


FORM.3

FOR ø3 2PIN or 3PIN LED											
PART NO	A	B	C HOLE IN CHASSIS	D	E	F	G	T CHASSIS THICKNESS	FORM	ø3 LED	PACKAGE
KLED-3JL	5.0	ø5.5	ø5.0	ø2.87	1.9	ø2.9	ø3.2	0.8	1	2 PIN	2000
KLED-3TU	5.1	ø5.5	ø5.0	ø2.87	1.9	ø2.9	ø3.2	0.8	3	2 PIN	
KLED-3PH	5.2	ø5.6	ø4.95	ø3.1	2.2	ø3.0	ø4.0	0.8	1	2 PIN	
KLED-3HS	5.2	ø6.0	ø5.3	ø2.95	2.55	ø3.0	ø3.2	0.9	1	2 PIN	
KLED-3YM	5.2	ø6.0	ø5.3	ø2.95	1.45	ø3.0	ø3.2	0.9	1	2 PIN	
KLED-3CF	5.6	ø5.6	ø5.0	ø3.1	2.6	ø3.0	ø4.0	1.0	1	2 PIN	
KLED-3RG	5.6	ø6.0	ø5.2	ø3.0	2.85	ø3.0	ø4.0	0.8	2	3 PIN	
KLED-3BN	5.6	ø6.0	ø5.2	ø3.0	2.85	ø3.0	ø4.0	0.8	2	3 PIN	
KLED-3A	5.6	ø6.0	ø5.3	ø3.0	2.95	ø3.0	ø4.0	1.0	1	2 PIN	
KLED-3MK	5.6	ø6.0	ø5.3	ø3.0	2.95	ø3.0	ø4.0	0.9	1	2 PIN	
KLED-3TB	5.7	ø6.0	ø5.2	ø3.0	2.6	ø3.0	ø4.0	1.0	1	2 PIN	
KLED-3WT	5.7	ø6.0	ø5.2	ø3.0	2.8	ø3.0	ø4.0	1.0	1	2 PIN	

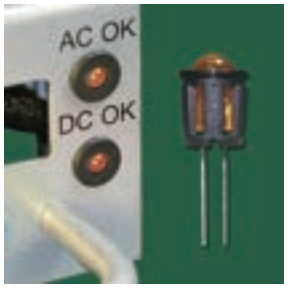

LED 座 LED HOUSING 4-30-3

- MATERIAL: NYLON 66(UL)
- FLAME CLASS: 94V-0/94V-2
- COLOR: BLACK

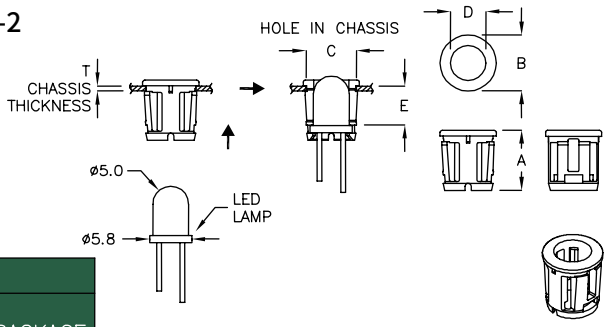

FOR ø5 2PIN LED							
PART NO	A	B	C HOLE IN CHASSIS	D	E	T CHASSIS THICKNESS	PACKAGE
KLED-5MS	8.4	ø7.8	ø7.0	ø4.9	5.35	0.6	2000

返回图片索引

LED 座 LED HOUSING 4-31-1

- MATERIAL: NYLON 66(UL)
- FLAME CLASS: 94V-0/94V-2
- COLOR: BLACK

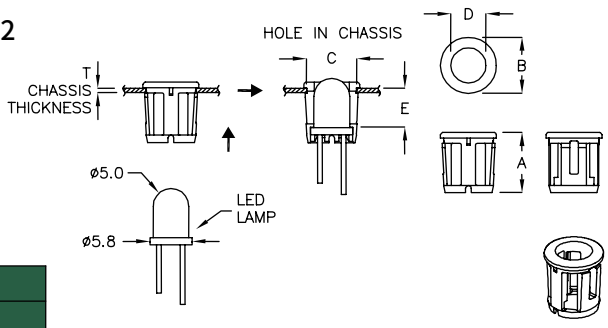

FOR ø5 2PIN LED							
PART NO	A	B	C	D	E	T CHASSIS THICKNESS	PACKAGE
HLED-5RC	8.4	ø7.8	ø7.0	ø4.9	5.45	0.6	2000

LED 座 LED HOUSING 4-31-2

- MATERIAL: NYLON 66(UL)
- FLAME CLASS: 94V-0/94V-2
- COLOR: BLACK

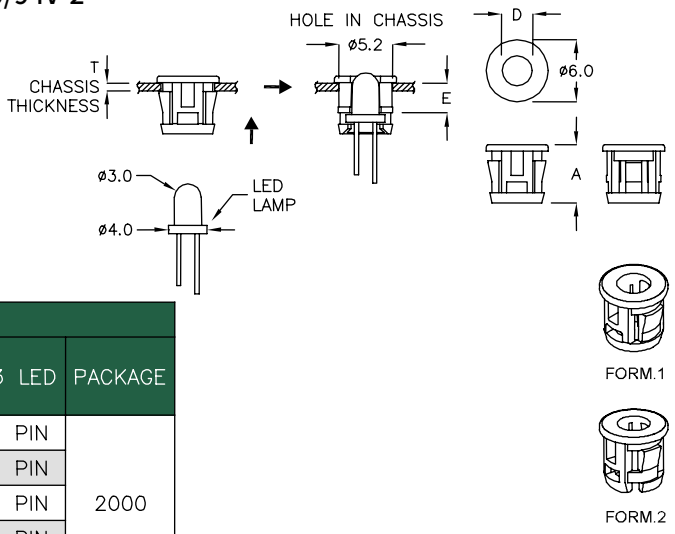

FOR ø3 2PIN or 3PIN LED							
PART NO	A	D	E	T CHASSIS THICKNESS	FORM	ø3 LED	PACKAGE
CLED-3K	5.6	ø2.9	3.0	0.8	2	3 PIN	2000
CLED-3C	5.6	ø3.0	2.95	0.8	1	2 PIN	
CLED-3RY	5.6	ø3.0	2.95	1.0	1	2 PIN	
CLED-3H	5.8	ø3.0	2.9	0.9	1	2 PIN	
★ CLED-3TN	5.7	ø3.1	3.15	1.0	2	3 PIN	

LED 座 LED HOUSING 4-31-3

- MATERIAL: NYLON 66(UL)
- FLAME CLASS: 94V-0/94V-2
- COLOR: BLACK

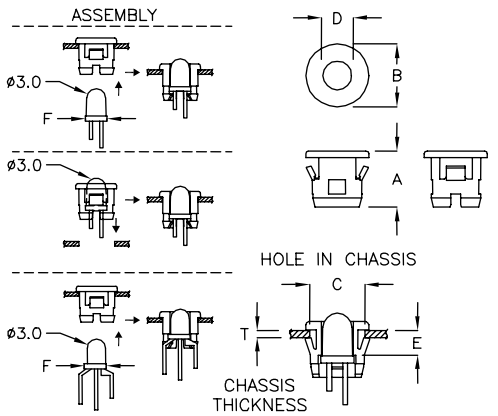

FOR ø3 2PIN or 3PIN LED								
PART NO	A	B	C HOLE IN CHASSIS	D	E	F	T CHASSIS THICKNESS	PACKAGE
MLED-3A	5.3	ø6.0	ø5.2	ø3.0	2.4	ø3.2	0.6	2000
MLED-3GS	6.0	ø6.7	ø5.3	ø3.05	3.0	ø3.8	0.8	

返回图片索引

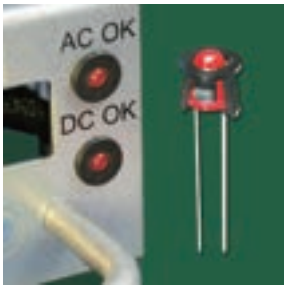

LED 座 LED HOUSING 4-32-1

- MATERIAL: NYLON 66(UL)
- FLAME CLASS: 94V-0/94V-2
- COLOR: BLACK

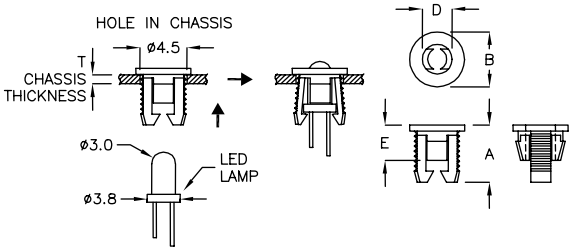

FOR ø3 2PIN LED						
PART NO	A	B	D	E	T CHASSIS THICKNESS	PACKAGE
CLED-1J	5.7	ø5.5	ø3.0	3.5	0.8	2000
CLED-1K	5.7	ø5.5	ø3.0	3.5	1.2	
CLED-1N	5.7	ø5.5	ø3.0	3.6	1.6	
CLED-3D	5.9	ø5.5	ø3.0	3.45	1.0	
CLED-6A	5.7	ø5.5	ø3.1	3.4	0.8	

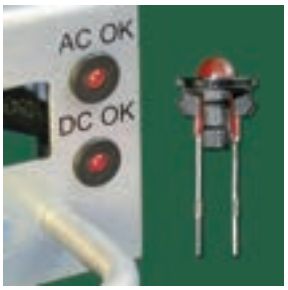

LED 座 LED HOUSING 4-32-2

- MATERIAL: PC(UL)
- FLAME CLASS: 94V-2
- COLOR: BLACK

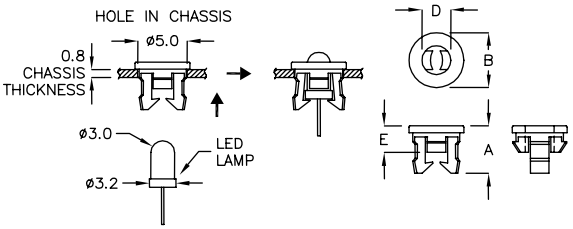

FOR ø3 2PIN LED					
PART NO	A	B	D	E	PACKAGE
CLED-3NX	4.8	ø5.6	ø2.95	2.7	2000

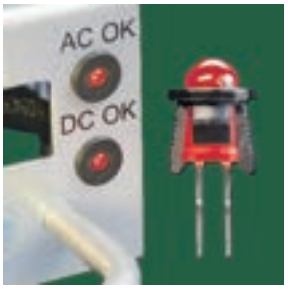

LED 座 LED HOUSING 4-32-3

- MATERIAL: PC(UL)
- FLAME CLASS: 94V-2
- COLOR: BLACK

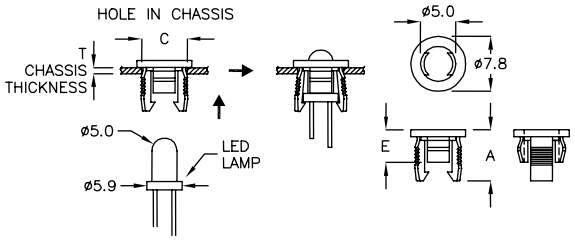

FOR ø5 2PIN LED					
PART NO	A	E	C HOLE IN CHASSIS	T CHASSIS THICKNESS	PACKAGE
CLED-1AQ	7.25	4.65	ø6.3	0.8~1.0	2000
			ø6.5	1.2~1.5	

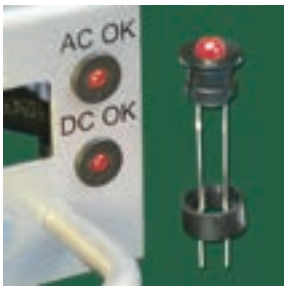

LED 座 LED HOUSING 4-32-4

- MATERIAL: NYLON 66(UL)
- FLAME CLASS: 94V-0/94V-2
- COLOR: BLACK

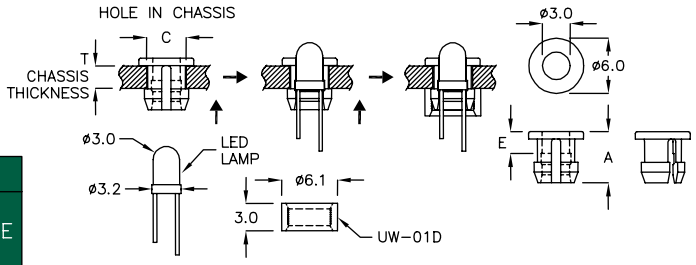

FOR ø3 2PIN LED					
PART NO	A	C HOLE IN CHASSIS	E	T CHASSIS THICKNESS	PACKAGE
CLED-4A	5.5	ø4.15	0.7	0.8	2000
CLED-4D	5.6	ø4.2	2.4	0.8~2.5	

ALSO CAN ASSEMBLE WITH UW-01D (PAGE 13-18-2)

返回图片索引

LED 座 LED HOUSING 4-33-1

- MATERIAL: NYLON 66(UL)
- FLAME CLASS: 94V-0/94V-2
- COLOR: BLACK

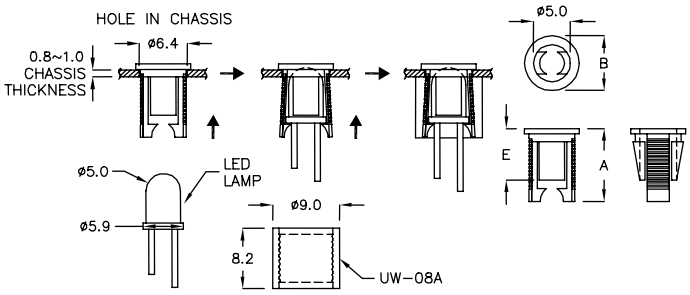

FOR ø5 2PIN LED				
PART NO	A	B	E	PACKAGE
CLED-2K	9.9	ø7.4	6.95	2000
★ CLED-2QT	11.4	ø7.4	8.45	

ALSO CAN ASSEMBLE WITH UW-08A (PAGE 13-18-2)

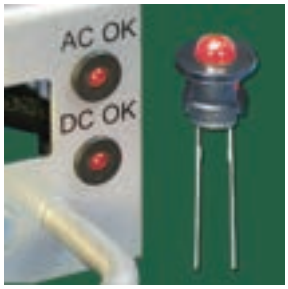

LED 座 LED HOUSING 4-33-2

- MATERIAL: NYLON 66(UL)
- FLAME CLASS: 94V-0/94V-2
- COLOR: BLACK

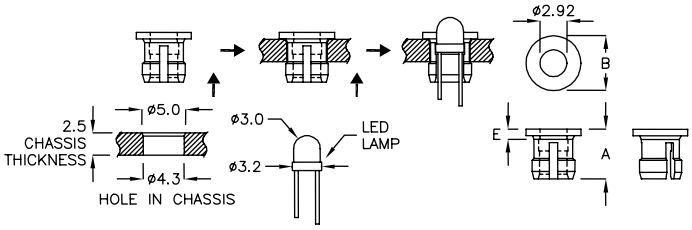

FOR ø3 2PIN LED				
PART NO	A	B	E	PACKAGE
CLED-4	5.46	ø6.0	1.12	2000

LED 座 LED HOUSING 4-33-3

- MATERIAL: NYLON 66(UL)
- FLAME CLASS: 94V-0/94V-2
- COLOR: BLACK

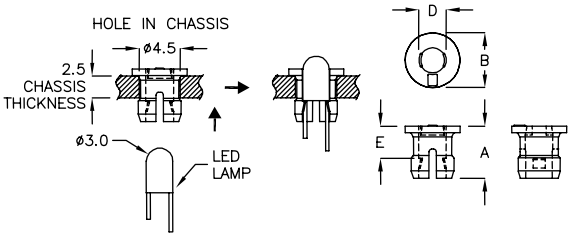

FOR ø3 2PIN LED					
PART NO	A	B	D	E	PACKAGE
CLED-4FM	5.7	ø6.0	ø3.0	3.5	2000

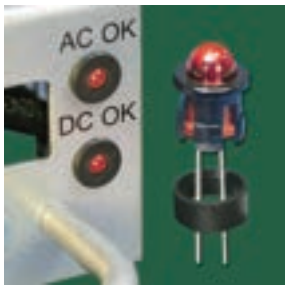

LED 座 LED HOUSING 4-33-4

- MATERIAL: NYLON 66(UL)
- FLAME CLASS: 94V-0/94V-2
- COLOR: BLACK

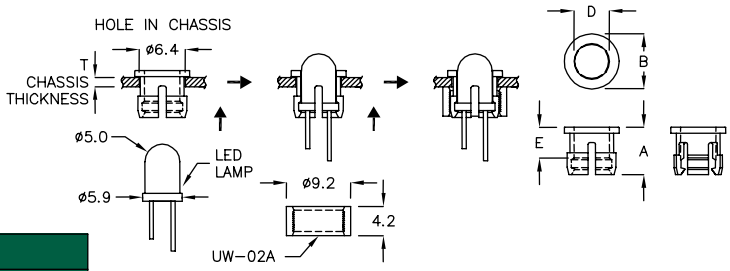

FOR ø5 2PIN LED						
PART NO	A	B	D	E	T CHASSIS THICKNESS	PACKAGE
CLED-5	6.8	ø7.9	ø5.1	4.45	0.8~2.6	2000
CLED-5A	6.8	ø7.9	ø5.1	4.45	2.8	

"CLED-5" ALSO CAN ASSEMBLE WITH UW-02A (PAGE 13-18-2)

返回图片索引

LED 座 LED HOUSING 4-34-1

- MATERIAL: NYLON 66(UL)
- FLAME CLASS: 94V-0/94V-2
- COLOR: BLACK

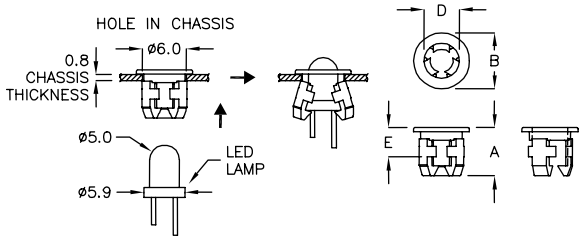

FOR ø5 2PIN LED					
PART NO	A	B	D	E	PACKAGE
YLED-5GK	6.9	ø8.0	ø5.05	4.2	2000

LED 座 LED HOUSING 4-34-2

- MATERIAL: NYLON 66(UL)
- FLAME CLASS: 94V-0/94V-2
- COLOR: BLACK

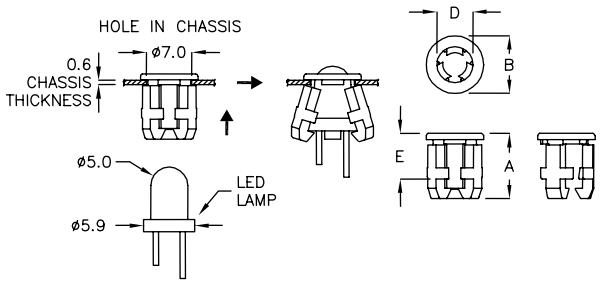

FOR ø5 2PIN LED					
PART NO	A	B	D	E	PACKAGE
GLED-5TC	8.85	ø7.8	ø4.9	6.2	2000

LED 座 LED HOUSING 4-34-3

- MATERIAL: NYLON 66(UL)
- FLAME CLASS: 94V-0/94V-2
- COLOR: BLACK

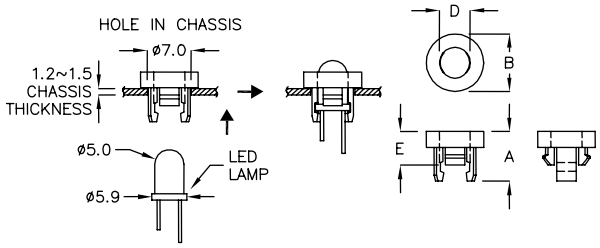

FOR ø5 2PIN or 3PIN LED					
PART NO	A	B	D	E	PACKAGE
CLED-1L	8.2	ø9.5	ø5.1	5.55	2000

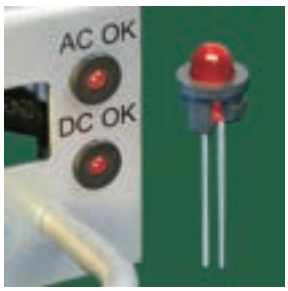

LED 座 LED HOUSING 4-34-4

- MATERIAL: NYLON 66(UL)
- FLAME CLASS: 94V-0/94V-2
- COLOR: BLACK

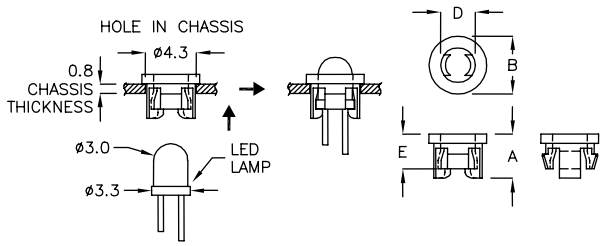

FOR ø3 2PIN or 3PIN LED					
PART NO	A	B	D	E	PACKAGE
CLED-2M	3.8	ø5.0	ø3.0	3.0	2000

返回图片索引

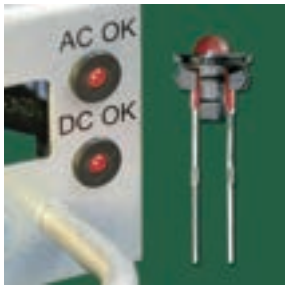

LED 座 LED HOUSING 4-35-1

- MATERIAL: NYLON 66(UL)
- FLAME CLASS: 94V-0/94V-2
- COLOR: BLACK

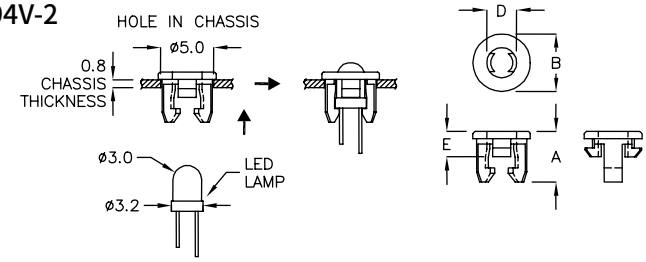

FOR ø3 2PIN LED					
PART NO	A	B	D	E	PACKAGE
CLED-2AJ	4.9	ø5.6	ø2.95	2.45	2000

LED 座 LED HOUSING 4-35-2

- MATERIAL: NYLON 66(UL)
- FLAME CLASS: 94V-0/94V-2
- COLOR: BLACK

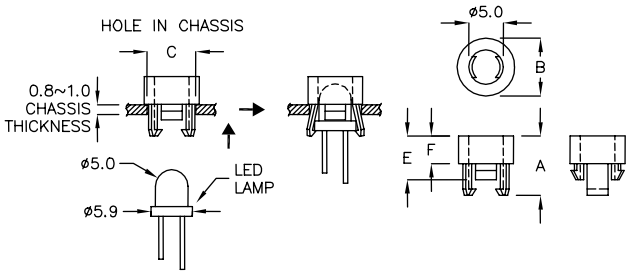

FOR ø5 2PIN or 3PIN LED						
PART NO	A	B	C HOLE IN CHASSIS	E	F	PACKAGE
CLED-1M	8.5	ø7.9	ø6.6	6.3	4.0	2000
CLED-1FC	9.2	ø7.9	ø6.5	7.3	5.0	
CLED-1Q	10.3	ø7.9	ø6.5	8.4	6.1	
CLED-1R	13.8	ø7.9	ø6.5	11.9	9.6	

LED 座 LED HOUSING 4-35-3

- MATERIAL: NYLON 66(UL)
- FLAME CLASS: 94V-0/94V-2
- COLOR: BLACK

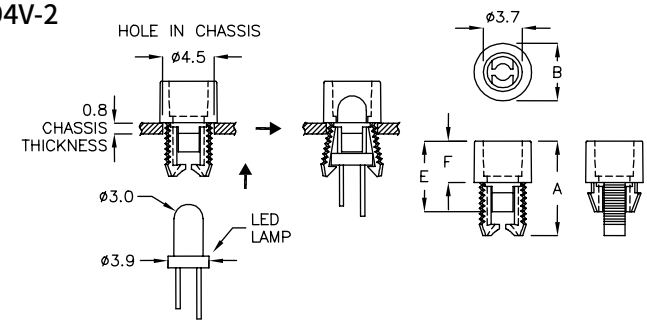

FOR ø3 2PIN or 3PIN LED					
PART NO	A	B	E	F	PACKAGE
CLED-1GK	9.05	ø5.5	6.75	3.95	2000

LED 座 LED HOUSING 4-35-4

- MATERIAL: NYLON 66(UL)
- FLAME CLASS: 94V-0/94V-2
- COLOR: BLACK

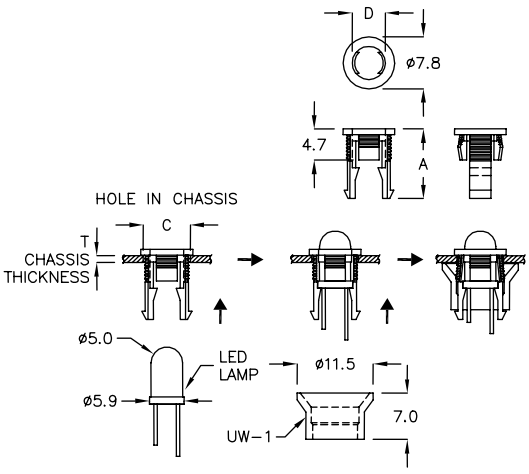

FOR ø5 2PIN LED					
PART NO	A	C HOLE IN CHASSIS	D	T CHASSIS THICKNESS	PACKAGE
CLED-2	10.5	ø6.5	ø5.0	1.0	2000
CLED-10YS	10.5	ø6.2	ø5.1	0.7~1.0	

ALSO CAN ASSEMBLE WITH UW-1 (PAGE 13-17-3)

返回图片索引

LED 座 LED HOUSING 4-36-1

- MATERIAL: NYLON 66(UL)
- FLAME CLASS: 94V-0/94V-2
- COLOR: BLACK

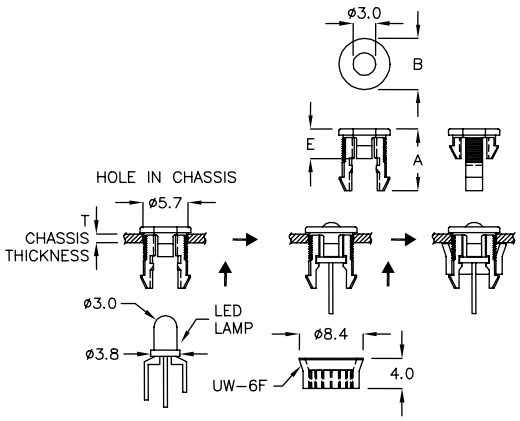

FOR ø3 3PIN LED					
PART NO	A	B	E	T CHASSIS THICKNESS	PACKAGE
CLED-6D	8.1	ø6.7	3.9	1.2	2000
CLED-6F	7.7	ø6.7	3.5	0.8	

ALSO CAN ASSEMBLE WITH UW-6F (PAGE 13-17-4)

LED 座 LED HOUSING 4-36-2

- MATERIAL: NYLON 66(UL)
- FLAME CLASS: 94V-0/94V-2
- COLOR: BLACK

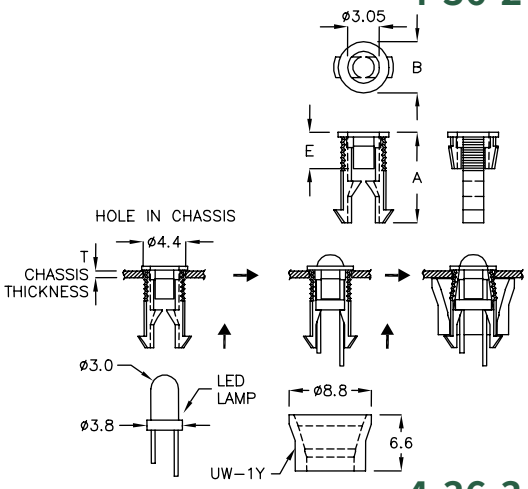

FOR ø3 2PIN LED					
PART NO	A	B	E	T CHASSIS THICKNESS	PACKAGE
CLED-2P	9.35	ø4.9	3.5	0.8	2000

ALSO CAN ASSEMBLE WITH UW-1Y (PAGE 13-17-3)

LED 座 LED HOUSING 4-36-3

- MATERIAL: NYLON 66(UL)
- FLAME CLASS: 94V-0/94V-2
- COLOR: BLACK

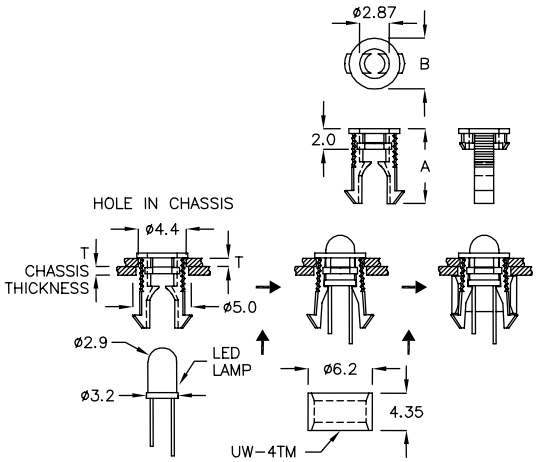

FOR ø3 2PIN LED				
PART NO	A	B	T CHASSIS THICKNESS	PACKAGE
CLED-7WP	7.85	ø4.9	0.8	2000

ALSO CAN ASSEMBLE WITH UW-4TM (PAGE 13-17-5)

LED 座 LED HOUSING 4-36-4

- MATERIAL: NYLON 66(UL)
- FLAME CLASS: 94V-0/94V-2
- COLOR: BLACK

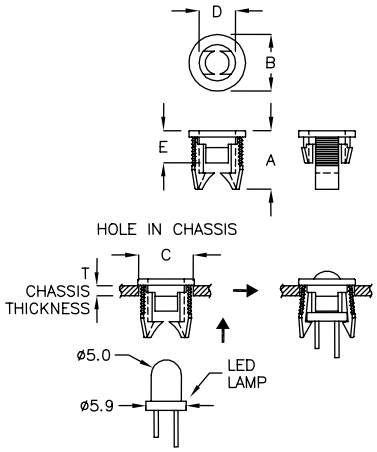

FOR ø5 2PIN LED							
PART NO	A	B	C HOLE IN CHASSIS	D	E	T CHASSIS THICKNESS	PACKAGE
CLED-1D	8.05	ø7.8	ø6.5	ø5.0	4.45	0.8~1.1	2000
CLED-4C	6.3	ø7.8	ø6.0	ø5.0	3.9	0.8~1.1	
CLED-6	8.0	ø7.8	ø7.0	ø5.1	4.6	0.8~0.9	

返回图片索引

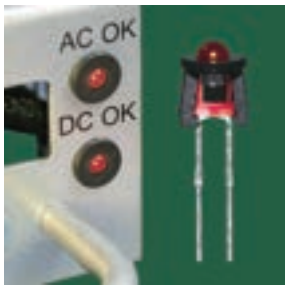

LED 座 LED HOUSING 4-37-1

- MATERIAL: NYLON 66(UL)
- FLAME CLASS: 94V-0/94V-2
- COLOR: BLACK

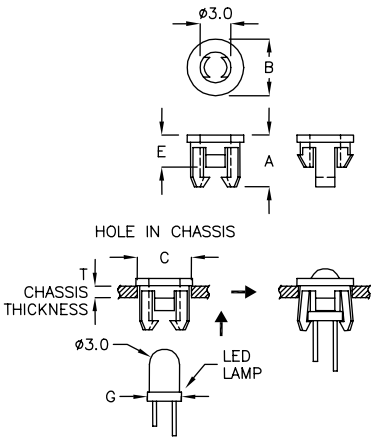

FOR ø3 2PIN LED							
PART NO	A	B	C HOLE IN CHASSIS	E	T CHASSIS THICKNESS	G LED LAMP	PACKAGE
CLED-1H	5.0	ø5.5	ø5.0	3.15	1.0~1.1	ø3.9	2000
CLED-3F	6.4	ø5.5	ø4.5	4.2	0.8	ø3.9	
CLED-3GX	8.15	ø5.5	ø4.5	5.95	4.0	ø3.3~ø3.5	
CLED-3Q	4.8	ø5.6	ø5.0	2.7	0.7~0.9	ø3.3~ø3.5	
CLED-2D	5.2	ø5.6	ø5.0	3.1	0.8	ø3.9	
CLED-1W	5.5	ø5.8	ø4.7	3.0	1.2~1.3	ø3.9	

LED 座 LED HOUSING 4-37-2

- MATERIAL: NYLON 66(UL)
- FLAME CLASS: 94V-0/94V-2
- COLOR: BLACK

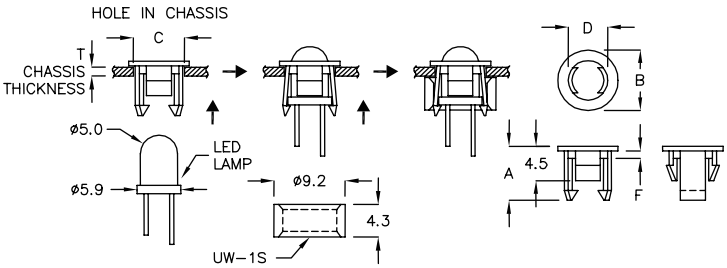

FOR ø5 2PIN LED							
PART NO	A	B	C HOLE IN CHASSIS	D	F	T CHASSIS THICKNESS	PACKAGE
CLED-1S	7.0	ø7.8	ø6.2	ø5.1	1.0	1.0~1.6	2000
CLED-1T	6.9	ø7.8	ø6.2	ø5.1	1.9	1.0~1.6	
CLED-1U	7.0	ø7.8	ø6.2	ø5.1	0.2	1.0	

"CLED-1S" ALSO CAN ASSEMBLE WITH UW-1S (PAGE 13-17-5)

LED 座 LED HOUSING 4-37-3

- MATERIAL: NYLON 66(UL)
- FLAME CLASS: 94V-0/94V-2
- COLOR: BLACK

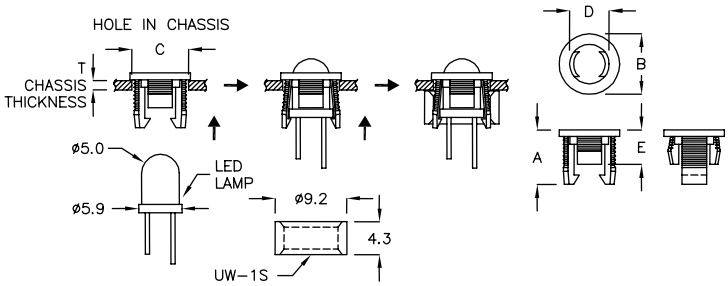

FOR ø5 2PIN LED							
PART NO	A	B	C HOLE IN CHASSIS	D	E	T CHASSIS THICKNESS	PACKAGE
CLED-1	7.15	ø7.8	ø6.5	ø5.0	4.4	0.8~1.6	2000
CLED-1A	7.05	ø7.8	ø6.2	ø5.0	4.45	1.0~1.6	

ALSO CAN ASSEMBLE WITH UW-1S (PAGE 13-17-5)

返回图片索引

LED 座 LED HOUSING 4-38-1

- MATERIAL: NYLON 66(UL)
- FLAME CLASS: 94V-0/94V-2
- COLOR: BLACK

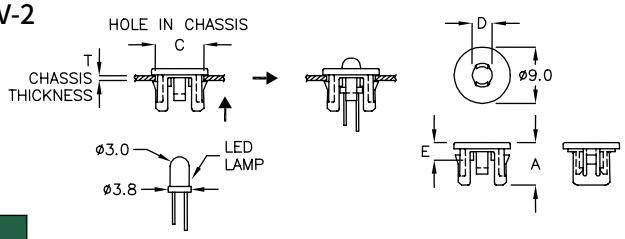

FOR ø3 2PIN LED						
PART NO	A	C HOLE IN CHASSIS	D	E	T CHASSIS THICKNESS	PACKAGE
QLED-3AK	6.8	ø7.6	ø3.2	2.8	0.6~0.8	2000

LED 座 LED HOUSING 4-38-2

- MATERIAL: NYLON 66(UL)
- FLAME CLASS: 94V-0/94V-2
- COLOR: BLACK

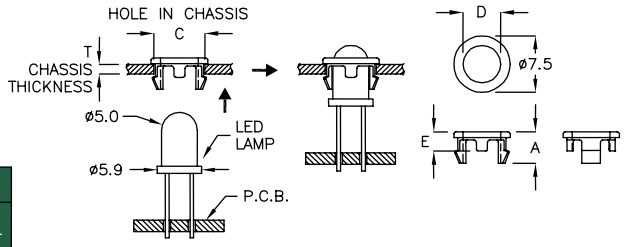

FOR ø5 2PIN LED						
PART NO	A	C HOLE IN CHASSIS	D	E	T CHASSIS THICKNESS	PACKAGE
FLED-5C	4.2	ø6.5	ø5.0	2.6	1.5	2000

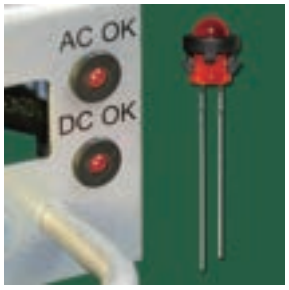

LED 座 LED HOUSING 4-38-3

- MATERIAL: NYLON 66(UL)
- FLAME CLASS: 94V-0/94V-2
- COLOR: BLACK

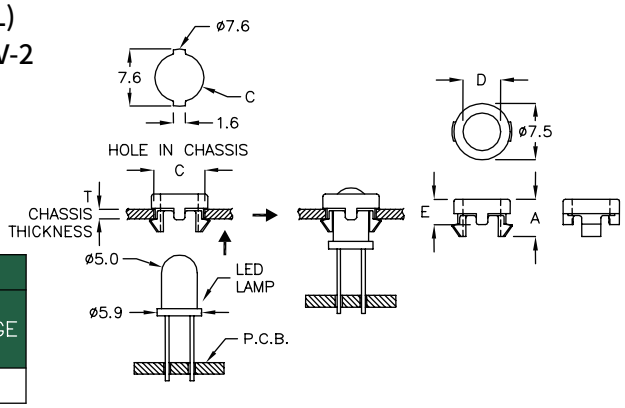

FOR ø5 2PIN LED						
PART NO	A	C HOLE IN CHASSIS	D	E	T CHASSIS THICKNESS	PACKAGE
FLED-5HK	5.0	ø6.5	ø5.0	3.4	1.2	2000

LED 套 LED HOLDER 4-38-4

- MATERIAL: NYLON 66(UL)
- FLAME CLASS: 94V-0/94V-2
- COLOR: BLACK

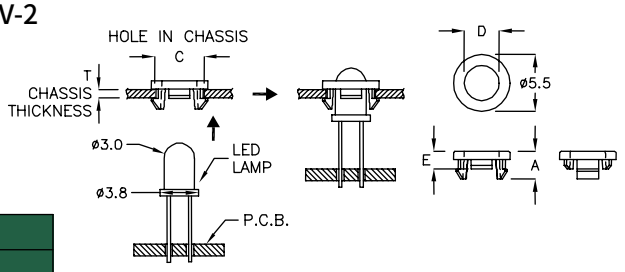

FOR ø3 2PIN LED							
	PART NO	A	C HOLE IN CHASSIS	D	E	T CHASSIS THICKNESS	PACKAGE
	CLA-3FM	2.5	ø4.7	ø3.0	2.0	0.6	2000
	CLA-03	2.7	ø4.7	ø3.0	1.7	0.8	
★	CLA-3BK	3.4	ø4.7	ø3.05	2.4	1.5	

返回图片索引

LED 套 LED HOLDER 4-39-1

- MATERIAL: NYLON 66(UL)
- FLAME CLASS: 94V-0/94V-2
- COLOR: BLACK

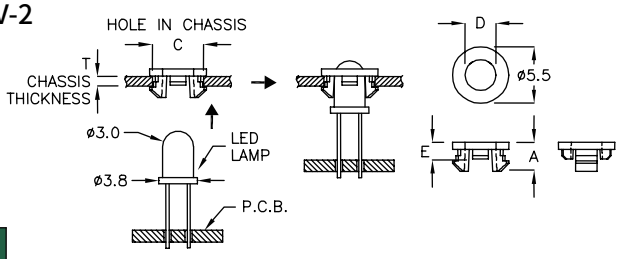

FOR ø3 2PIN LED						
PART NO	A	C HOLE IN CHASSIS	D	E	T CHASSIS THICKNESS	PACKAGE
CLA-3AR	2.8	ø4.9	ø3.0	1.6	1.0	2000

LED 座 LED HOUSING 4-39-2

- MATERIAL: NYLON 66(UL)
- FLAME CLASS: 94V-0/94V-2
- COLOR: BLACK

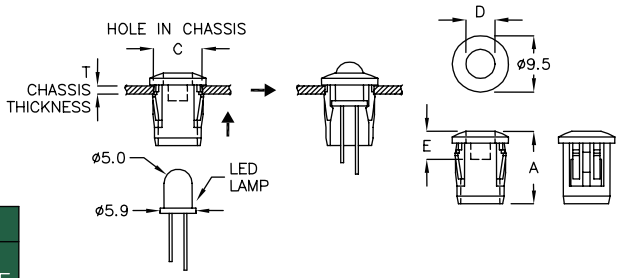

FOR ø5 2PIN LED						
PART NO	A	C HOLE IN CHASSIS	D	E	T CHASSIS THICKNESS	PACKAGE
EEA-1C	12.2	ø8.0	ø4.9	4.7	0.8~1.5	2000
EEA-12D	12.2	ø8.0	ø4.9	4.7	2.0	

LED 座 LED HOUSING 4-39-3

- MATERIAL: NYLON 66(UL)
- FLAME CLASS: 94V-0/94V-2
- COLOR: BLACK

NEW

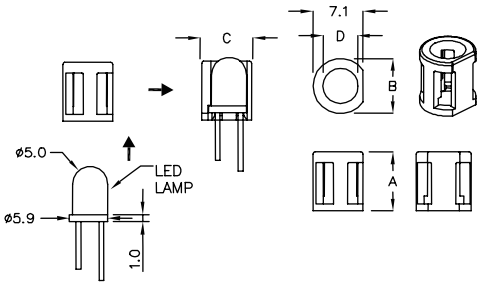

FOR ø5 2PIN LED					
PART NO	A	B	C	D	PACKAGE
★ JLED-5A	8.4	ø7.8	ø7.0	ø5.0	2000

LED 套 LED HOLDER 4-39-4

- MATERIAL: NYLON 66(UL)
- FLAME CLASS: 94V-0/94V-2
- COLOR: BLACK

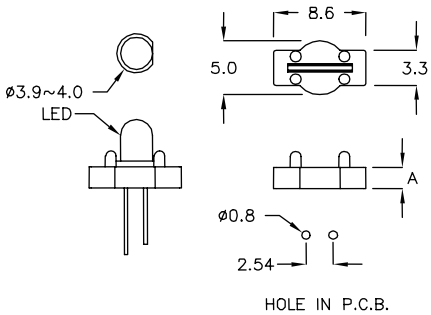

FOR ø3 2PIN LED		
PART NO	A	PACKAGE
LES-02	2.0	2000

LED 套 LED HOLDER 4-40-1

- MATERIAL: NYLON 66(UL)
- FLAME CLASS: 94V-0/94V-2
- COLOR: NATURAL

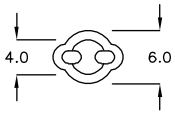

FOR ø5 2PIN LED		
PART NO	A	PACKAGE
LES-5	5.0	2000

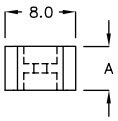

LED 套 LED HOLDER 4-40-2

- MATERIAL: NYLON 66(UL)
- FLAME CLASS: 94V-0/94V-2
- COLOR: NATURAL

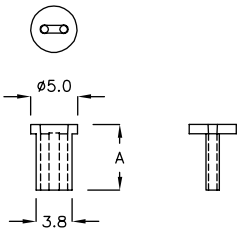

FOR ø5 2PIN LED		
PART NO	A	PACKAGE
LEZ-7	7.0	2000

LED 套 LED HOLDER 4-40-3

- MATERIAL: NYLON 66(UL)
- FLAME CLASS: 94V-0/94V-2
- COLOR: NATURAL

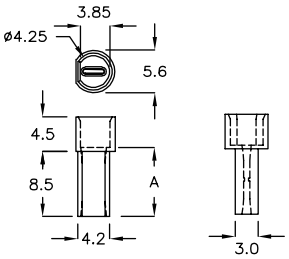

FOR ø3 2PIN LED		
PART NO	A	PACKAGE
EQC-09	9.0	500

LED 套 LED HOLDER 4-40-4

- MATERIAL: NYLON 66(UL)
- FLAME CLASS: 94V-0/94V-2
- COLOR: NATURAL,BLACK

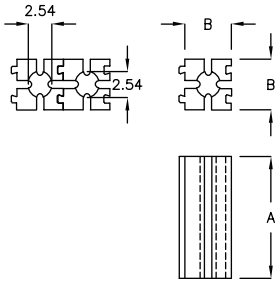

FOR ø5 2PIN LED			
PART NO	A	B	PACKAGE
LEDX-3	3.0	5.0	2000
LEDX-4	4.0		
LEDX-5	5.0		
LEDX-6	6.0		
LEDX-7	7.0		
LEDX-8	8.0		
LEDX-9	9.0	5.0	1000
LEDX-10	10.0		
LEDX-11	11.0		
LEDX-12	12.0		

LED 套 LED HOLDER 4-40-5

- MATERIAL: NYLON 66(UL)
- FLAME CLASS: 94V-0/94V-2
- COLOR: NATURAL

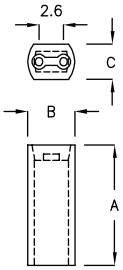

FOR ø5 2PIN LED				
PART NO	A	B	C	PACKAGE
QBF-15	15.0	5.0	3.4	1000

返回图片索引

LED 套 LED HOLDER 4-41-1

- MATERIAL: NYLON 66(UL)
- FLAME CLASS: 94V-0/94V-2
- COLOR: NATURAL

Built–In Clamp Function

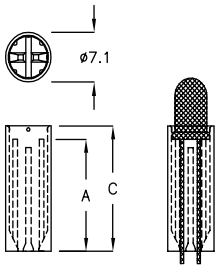

FOR ø5 2PIN LED			
PART NO	A	C	PACKAGE
LED–18	16.0	18.0	1000

LED 套 LED HOLDER 4-41-2

- MATERIAL: NYLON 66(UL)
- FLAME CLASS: 94V-0/94V-2
- COLOR: NATURAL

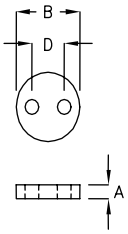

FOR ø5 2PIN LED				
PART NO	A	B	D	PACKAGE
LED3–1TF	1.0	ø5.0	2.54	2000

LED 套 LED HOLDER 4-41-3

- MATERIAL: NYLON 66(UL)
- FLAME CLASS: 94V-0/94V-2
- COLOR: NATURAL

LED 套无开槽

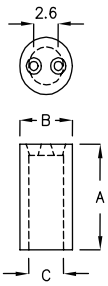

* LED 套开凹槽

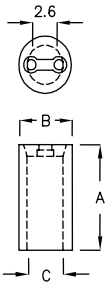

＊ LED HOLDER WITH CONCAVE
＊表示 LED 套开凹槽

FOR ø5 2PIN LED				
PART NO	A	B	C	PACKAGE
LED–2	2.2	ø5.6	ø3.8	2000
LED–2.5	2.6	ø5.9	ø3.8	
LED–3	3.2	ø5.6	ø3.8	
* LED–3.6	3.6	ø5.6	ø3.8	
LED–4	4.1	ø5.6	ø3.8	
* LED–4.5	4.5	ø5.6	ø3.8	
* LED–5	5.0	ø5.6	ø3.8	
* LED–6	6.0	ø5.6	ø3.8	
* LED–6S	6.1	ø5.7	ø3.8	
* LED–6.8	6.8	ø5.6	ø3.8	
LED–7.5	7.5	ø5.6	ø3.8	
* LED–8	8.0	ø5.6	ø3.8	
LED–8.8	8.8	ø5.6	ø3.8	
LED–9.8	9.8	ø5.6	ø3.8	
* LED–10A	10.0	ø5.9	ø3.9	
* LED–11A	11.2	ø5.8	ø3.9	1000
LED–12	12.0	ø5.8	ø3.9	
LED–15	15.1	ø5.6	ø3.9	
* LED–17	17.1	ø5.6	ø3.9	
LED–18.5	18.5	ø5.7	ø3.9	
LED–24	24.1	ø5.8	ø3.9	500
LED–37	37.5	ø5.8	ø3.9	

FOR ø5 2PIN LED				
PART NO	A	B	C	PACKAGE
* LED–2A	2.0	ø5.0	ø3.7	2000
* LED–2.5A	2.5	ø5.0	ø3.7	
* LED–3A	3.1	ø5.0	ø3.7	
* LED–3.5	3.5	ø5.0	ø3.6	
* LED–4C	4.0	ø5.0	ø3.6	
* LED–4.5A	4.5	ø5.0	ø3.6	
* LED–5A	5.0	ø5.0	ø3.6	
* LED–5.5	5.5	ø5.0	ø3.6	
* LED–6A	6.0	ø5.0	ø3.6	
* LED–6.5A	6.5	ø5.0	ø3.5	
* LED–7	7.0	ø5.0	ø3.6	
* LED–7.5A	7.5	ø5.1	ø3.6	
* LED–7.9	7.9	ø5.0	ø3.6	
* LED–8.5A	8.5	ø5.0	ø3.6	
* LED–9	9.0	ø5.1	ø3.6	
LED–9.5	9.5	ø5.0	ø3.6	
* LED–10	10.0	ø5.0	ø3.5	
* LED–10.6	10.7	ø5.1	ø3.6	1000
LED–11	11.0	ø5.0	ø3.8	
* LED–12A	12.0	ø5.0	ø3.2	
* LED–13	13.0	ø5.0	ø3.6	
* LED–13.8	13.8	ø5.0	ø3.7	
LED–14	14.0	ø5.0	ø3.6	
* LED–14A	14.0	ø5.0	ø3.7	
* LED–15KM	15.0	ø5.0	ø3.5	
* LED–15A	15.2	ø5.0	ø3.7	
* LED–16	16.0	ø5.0	ø3.7	
* LED–16A	16.4	ø5.0	ø3.7	
LED–18B	18.3	ø5.1	ø3.6	
LED–19	19.1	ø5.0	ø3.9	
* LED–20	20.2	ø5.0	ø3.8	
LED–21	21.0	ø5.0	ø3.8	
* LED–22	22.0	ø5.1	ø3.9	
* LED–23	23.0	ø5.1	ø3.8	500

返回图片索引

LED 套 LED HOLDER 4-42-1

- MATERIAL: NYLON 66(UL)
- FLAME CLASS: 94V-0/94V-2
- COLOR: NATURAL

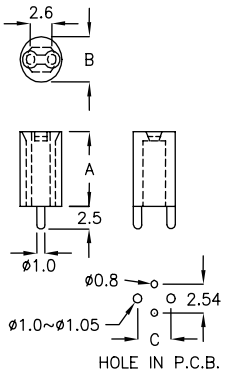

FOR ø5 2PIN LED				
PART NO	A	B	C	PACKAGE
LED−4T	4.0	ø5.0	4.0	2000
LED−4DT	4.0	ø4.2	3.0	
LED−6T	6.0	ø5.0	4.0	
LED−7T	7.0	ø5.0	4.0	1000
LED−8T	8.0	ø5.0	4.0	
LED−10T	10.0	ø5.0	4.0	
LED−11T	11.0	ø5.0	4.0	
LED−12T	12.0	ø5.1	4.0	
LED−12AT	12.5	ø5.0	4.0	
LED−13T	13.0	ø5.0	4.0	
LED−14T	14.0	ø5.0	4.0	
LED−14FT	14.5	ø5.0	4.0	
LED−15T	15.0	ø5.0	4.0	
LED−17T	17.1	ø5.6	4.6	
LED−18T	18.3	ø5.0	4.0	
LED−19T	19.0	ø5.0	4.0	
LED−20T	20.0	ø5.0	4.0	
LED−24T	24.0	ø5.0	4.0	500
LED−28T	28.0	ø5.0	4.0	

LED座 LED HOUSING 4-42-2

- MATERIAL: NYLON 66(UL)
- FLAME CLASS: 94V-0/94V-2
- COLOR: BLACK

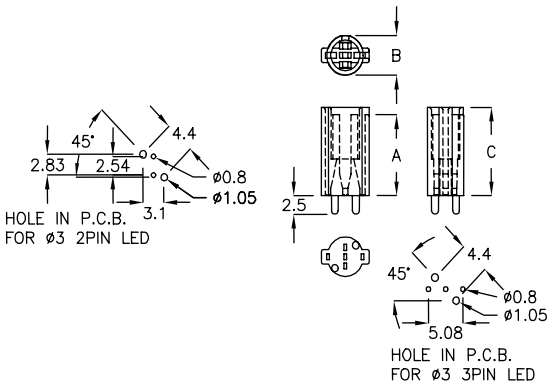

Built−in Clamp Function

FOR ø3 2PIN or 3PIN LED				
PART NO	A	B	C	PACKAGE
EQA−07	7.0	ø5.4	12.0	1000
EQA−11	11.0	ø5.4	12.0	

LED座 LED HOUSING 4-42-3

- MATERIAL: NYLON 66(UL)
- FLAME CLASS: 94V-0/94V-2
- COLOR: BLACK

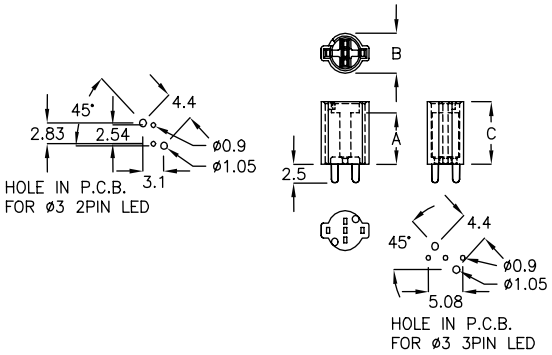

Built−in Clamp Function

FOR ø3 2PIN or 3PIN LED				
PART NO	A	B	C	PACKAGE
EQA−7PQ	7.0	ø5.4	8.5	1000

返回图片索引

LED 座 LED HOUSING 4-43-1

- MATERIAL: NYLON 66(UL)
- FLAME CLASS: 94V-0/94V-2
- COLOR: NATURAL

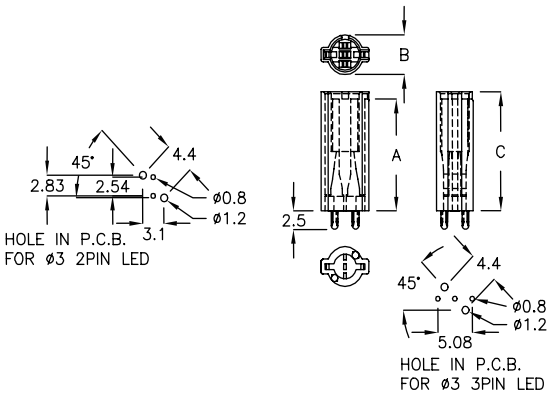

Built–In Clamp Function

FOR ø3 2PIN or 3PIN LED				
PART NO	A	B	C	PACKAGE
EQF–19	19.0	ø5.4	20.0	1000

LED 座 LED HOUSING 4-43-2

- MATERIAL: NYLON 66(UL)
- FLAME CLASS: 94V-0/94V-2
- COLOR: NATURAL

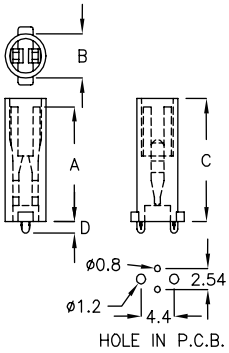

FOR ø3 2PIN LED					
PART NO	A	B	C	D	PACKAGE
EQH–14	14.0	ø5.4	15.0	1.4	1000
EQH–17	17.0	ø5.4	18.0	1.8	
EQH–21	21.0	ø5.4	22.0	1.8	

LED 套 LED HOLDER 4-43-3

- MATERIAL: NYLON 66(UL)
- FLAME CLASS: 94V-0/94V-2
- COLOR: NATURAL

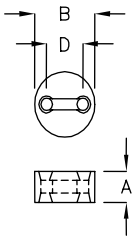

FOR ø3 2PIN LED				
PART NO	A	B	D	PACKAGE
LED3–2A	2.0	ø4.2	2.54	2000

LED 套 LED HOLDER 4-43-4

- MATERIAL: NYLON 66(UL)
- FLAME CLASS: 94V-0/94V-2
- COLOR: NATURAL

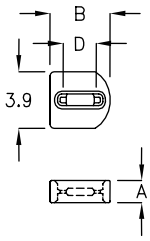

Built–In Clamp Function

FOR ø3 2PIN LED				
PART NO	A	B	D	PACKAGE
LED3–1SQ	1.5	4.5	2.54	2000

返回图片索引

LED 套 LED HOLDER 4-44-1

- MATERIAL: NYLON 66(UL)
- FLAME CLASS: 94V-0/94V-2
- COLOR: NATURAL, BLACK

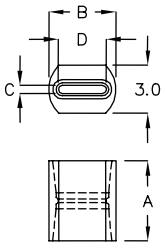

FOR ø3 2PIN LED					
PART NO	A	B	C	D	PACKAGE
LED3—1D	1.5	ø4.2	0.5	3.0	2000
LED3—5GW	5.0	ø4.2	0.5	3.0	
LED3—9K	9.0	ø4.2	0.5	3.0	

LED 套 LED HOLDER 4-44-2

- MATERIAL: NYLON 66(UL)
- FLAME CLASS: 94V-0/94V-2
- COLOR: NATURAL, BLACK

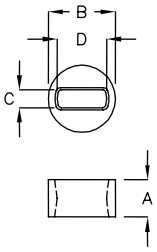

FOR ø3 2PIN LED					
PART NO	A	B	C	D	PACKAGE
LED3—1A	1.5	ø4.2	0.8	3.0	2000
LED3—1B	1.6	ø4.0	0.7	3.05	
LED3—1C	0.8	ø4.2	1.0	3.0	
LED3—2B	2.3	ø4.2	1.1	3.05	
LED3—2.5	2.5	ø4.1	1.25	3.05	
LED3—3B	3.3	ø4.2	1.0	3.05	

LED 套 LED HOLDER 4-44-3

- MATERIAL: NYLON 66(UL)
- FLAME CLASS: 94V-0/94V-2
- COLOR: NATURAL

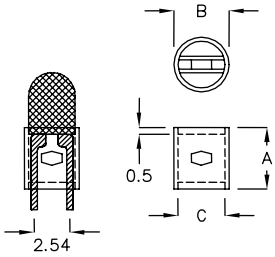

FOR ø3 2PIN LED				
PART NO	A	B	C	PACKAGE
LED3—4M	4.6	ø4.2	ø3.4	2000

LED 套 LED HOLDER 4-44-4

- MATERIAL: NYLON 66(UL)
- FLAME CLASS: 94V-0/94V-2
- COLOR: NATURAL

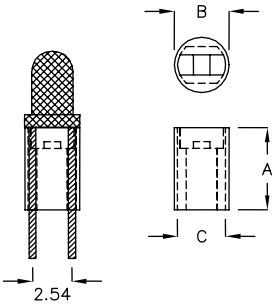

FOR ø3 2PIN LED				
PART NO	A	B	C	PACKAGE
LED3—4DK	4.0	ø4.0	ø3.5	2000
LED3—6DC	6.0	ø4.0	ø3.2	
LED3—7K	7.5	ø4.0	ø3.3	

返回图片索引

LED 套 LED HOLDER 4-45-1

- MATERIAL: NYLON 66(UL)
- FLAME CLASS: 94V-0/94V-2
- COLOR: NATURAL

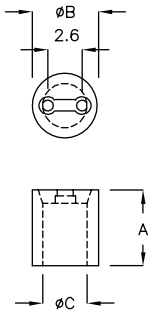

FOR ø3 2PIN LED				
PART NO	A	B	C	PACKAGE
LED-3.8	3.8	4.1	3.1	2000
LED-4A	4.1	4.1	3.1	

LED 套 LED HOLDER 4-45-2

- MATERIAL: NYLON 66(UL)
- FLAME CLASS: 94V-0/94V-2
- COLOR: NATURAL

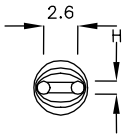

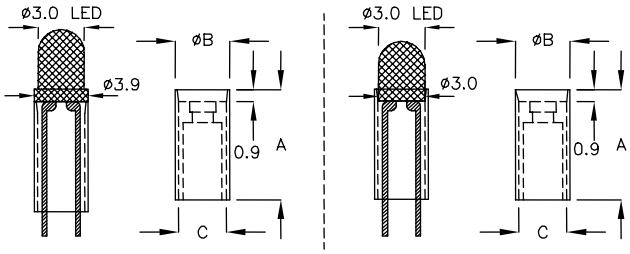

打＊表 LED 套 H: 打椭圆孔

＊ LED HOLDER WITH AN OVAL HOLE "H"

FOR ø3 2PIN LED				
PART NO	A	B	C	PACKAGE
LED3-3S	2.8	4.2	3.5	2000
LED3-3	3.0	4.2	3.5	
LED3-3A	3.5	4.2	3.5	
＊ LED3-4	4.0	4.2	3.5	
LED3-4A	4.5	4.2	3.5	
LED3-5	5.0	4.2	3.5	
LED3-5B	5.5	4.2	3.5	
LED3-6	6.1	4.2	3.5	
＊ LED3-6B	6.5	4.2	3.5	
LED3-7	7.0	4.2	3.5	
LED3-7B	7.6	4.2	3.5	
LED3-8	8.0	4.2	3.6	
LED3-8B	8.5	4.2	3.6	
LED3-9	9.0	4.2	3.6	
LED3-9A	9.2	4.2	3.6	
LED3-9B	9.5	4.2	3.6	
LED3-10	10.0	4.2	3.6	

FOR ø3 2PIN LED				
PART NO	A	B	C	PACKAGE
LED3-11	11.1	4.2	3.5	2000
LED3-12	12.0	4.2	3.5	
＊LED3-12B	12.5	4.2	3.6	
LED3-13	13.0	4.2	3.5	
LED3-14	14.0	4.2	3.6	
＊LED3-15	15.0	4.2	3.5	1000
LED3-15A	15.0	4.1	3.6	
LED3-16	16.0	4.2	3.5	
＊LED3-17	17.0	4.2	3.5	
LED3-18	18.0	4.2	3.5	
＊LED3-18B	18.5	4.2	3.5	
LED3-19	19.0	4.2	3.5	
＊LED3-20	20.0	4.2	3.5	
＊LED3-21	21.0	4.2	3.5	
＊LED3-22	22.0	4.2	3.5	
LED3-23	23.0	4.2	3.5	
LED3-25	25.0	4.4	3.5	

返回图片索引

LED 套 LED HOLDER 4-46-1

- MATERIAL: NYLON 66(UL)
- FLAME CLASS: 94V-0/94V-2
- COLOR: NATURAL

FOR ø3 2PIN LED				
PART NO	A	B	C	PACKAGE
LED3–8F	8.5	ø4.2	ø3.6	2000

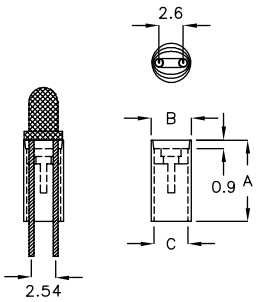

LED 套 LED HOLDER 4-46-2

- MATERIAL: NYLON 66(UL)
- FLAME CLASS: 94V-0/94V-2
- COLOR: NATURAL

FOR ø3 2PIN LED				
PART NO	A	B	C	PACKAGE
LED3–17K	17.1	ø4.0	ø3.5	1000

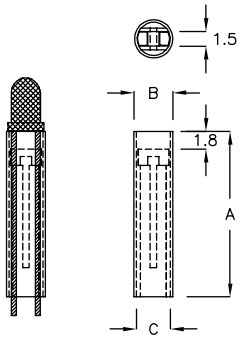

LED 套 LED HOLDER 4-46-3

- MATERIAL: NYLON 66(UL)
- FLAME CLASS: 94V-0/94V-2
- COLOR: NATURAL

FOR ø3 2PIN LED			
PART NO	A	B	PACKAGE
LED3–21F	21.0	ø4.2	1000

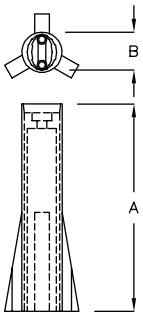

LED 套 LED HOLDER 4-46-4

- MATERIAL: NYLON 66(UL)
- FLAME CLASS: 94V-0/94V-2
- COLOR: NATURAL

Built–In Clamp Function

FOR ø3 2PIN LED			
PART NO	A	B	PACKAGE
EET–10	10.0	ø4.25	2000

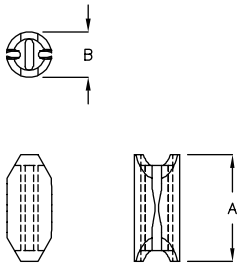

返回图片索引

LED 套 LED HOLDER 4-47-1

- MATERIAL: NYLON 66(UL)
- FLAME CLASS: 94V-0/94V-2
- COLOR: NATURAL,BLACK

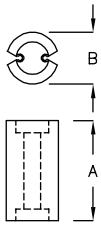

Built–In Clamp Function

FOR ø3 & ø5 2PIN LED			
PART NO	A	B	PACKAGE
EDG–10	10.0	ø5.2	2000

LED 套 LED HOLDER 4-47-2

- MATERIAL: NYLON 66(UL)
- FLAME CLASS: 94V-0/94V-2
- COLOR: NATURAL,BLACK

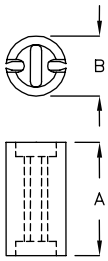

Built–In Clamp Function

FOR ø3 or ø5 2PIN LED			
PART NO	A	B	PACKAGE
EDP–02	2.0	ø4.25	2000
EDP–2M	2.5	ø4.25	
EDP–3M	3.5	ø4.25	
EDP–04	4.0	ø4.25	
EDP–4A	4.5	ø4.25	
EDP–05	5.0	ø4.25	
EDP–5A	5.5	ø4.25	
EDP–06	6.0	ø4.25	

Built–In Clamp Function

FOR ø3 or ø5 2PIN LED			
PART NO	A	B	PACKAGE
EDP–6A	6.5	ø4.25	2000
EDP–07	7.0	ø4.25	
EDP–7A	7.5	ø4.25	
EDP–08	8.0	ø4.25	
EDP–8A	8.5	ø4.25	
EDP–09	9.0	ø4.25	
EDP–9A	9.5	ø4.25	
EDP–10	10.0	ø4.25	
EDP–10A	10.5	ø4.25	
EDP–11	11.0	ø4.25	
EDP–11A	11.5	ø4.25	
EDP–12	12.0	ø4.25	
EDP–12A	12.5	ø4.25	
EDP–17	17.0	ø4.25	

LED 套 LED HOLDER 4-47-3

- MATERIAL: NYLON 66(UL)
- FLAME CLASS: 94V-0/94V-2
- COLOR: NATURAL,BLACK

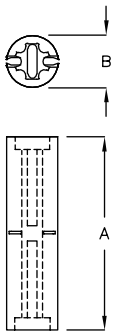

Built–In Clamp Function

FOR ø3 & ø5 2PIN LED			
PART NO	A	B	PACKAGE
EDP–23	23.0	ø4.25	1000

LED 套 LED HOLDER 4-47-4

- MATERIAL: NYLON 66(UL)
- FLAME CLASS: 94V-0/94V-2
- COLOR: NATURAL,BLACK

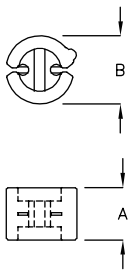

Built–In Clamp Function

FOR ø3 & ø5 2PIN LED			
PART NO	A	B	PACKAGE
EDD–4FQ	4.0	ø5.2	2000

返回图片索引

LED 套 LED HOLDER 4-48-1

- MATERIAL: NYLON 66(UL)
- FLAME CLASS: 94V-0/94V-2
- COLOR: NATURAL,BLACK

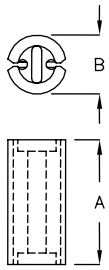

Built–In Clamp Function

FOR ø3 or ø5 2PIN LED			
PART NO	A	B	PACKAGE
EDG–02	2.0	ø5.2	2000
EDG–2M	2.5	ø5.2	
EDG–3M	3.5	ø5.2	
EDG–04	4.0	ø5.2	
EDG–4A	4.5	ø5.2	
EDG–05	5.0	ø5.2	
EDG–5A	5.5	ø5.2	

Built–In Clamp Function

FOR ø3 or ø5 2PIN LED			
PART NO	A	B	PACKAGE
EDG–06	6.0	ø5.2	2000
EDG–6A	6.5	ø5.2	
EDG–07	7.0	ø5.2	
EDG–7A	7.5	ø5.2	
EDG–08	8.0	ø5.2	
EDG–8A	8.5	ø5.2	
EDG–09	9.0	ø5.2	
EDG–9A	9.5	ø5.2	
EDG–10A	10.0	ø5.2	
EDG–10C	10.5	ø5.2	
EDG–11	11.0	ø5.2	
EDG–11A	11.5	ø5.2	
EDG–12	12.0	ø5.2	
EDG–12A	12.5	ø5.2	

LED 套 LED HOLDER 4-48-2

- MATERIAL: NYLON 66(UL)
- FLAME CLASS: 94V-0/94V-2
- COLOR: NATURAL,BLACK

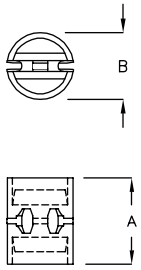

Built–In Clamp Function

FOR ø3 3PIN LED			
PART NO	A	B	PACKAGE
ECW–06	7.0	ø5.4	2000

LED 套 LED HOLDER 4-48-3

- MATERIAL: NYLON 66(UL)
- FLAME CLASS: 94V-0/94V-2
- COLOR: BLACK

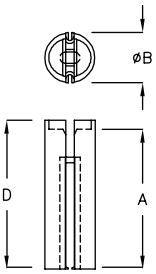

FOR ø3 3PIN LED				
PART NO	A	B	D	PACKAGE
EEP–15	15.0	ø5.4	16.0	2000

LED 套 LED HOLDER 4-48-4

- MATERIAL: NYLON 66(UL)
- FLAME CLASS: 94V-0/94V-2
- COLOR: BLACK

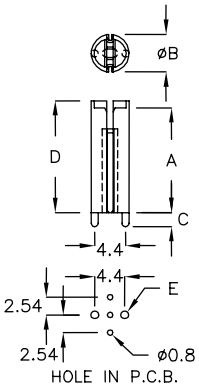

FOR ø3 3PIN LED						
PART NO	A	B	C	D	E	PACKAGE
EEG–08	7.0	ø5.4	1.5	8.0	ø1.05	2000
EEG–15	15.0	ø5.4	2.0	16.0	ø1.10	1000

返回图片索引

LED 套 LED HOLDER 4-49-1

- MATERIAL: NYLON 66(UL)
- FLAME CLASS: 94V-0/94V-2
- COLOR: BLACK

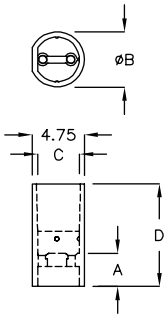

FOR Ø3 2PIN LED					
PART NO	A	B	C	D	PACKAGE
QLW-02	2.0	Ø5.0	Ø4.1	7.9	2000
QLW-2A	2.0	Ø5.0	Ø4.1	6.6	
QLW-03	4.5	Ø5.0	Ø4.1	10.0	

LED 套 LED HOLDER 4-49-2

- MATERIAL: NYLON 66(UL)
- FLAME CLASS: 94V-0/94V-2
- COLOR: BLACK

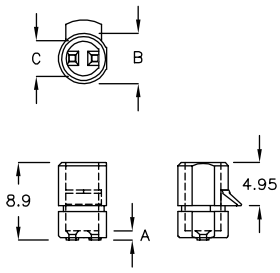

FOR Ø3 2PIN LED				
PART NO	A	B	C	PACKAGE
QQA-3AD	1.1	Ø5.8	Ø4.1	2000

LED 套 LED HOLDER 4-49-3

- MATERIAL: NYLON 66(UL)
- FLAME CLASS: 94V-0/94V-2
- COLOR: BLACK

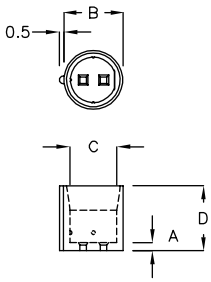

FOR Ø5 2PIN LED					
PART NO	A	B	C	D	PACKAGE
QLS-1A	1.0	Ø7.4	Ø5.9	8.0	2000

LED 套 LED HOLDER 4-49-4

- MATERIAL: NYLON 66(UL)
- FLAME CLASS: 94V-0/94V-2
- COLOR: BLACK

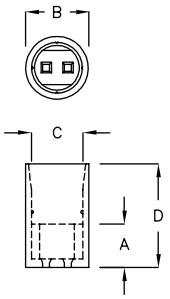

FOR Ø5 2PIN LED					
PART NO	A	B	C	D	PACKAGE
QLS-05	5.0	Ø7.4	Ø6.0	12.0	2000

LED 套 LED HOLDER 4-49-5

- MATERIAL: NYLON 66(UL)
- FLAME CLASS: 94V-0/94V-2
- COLOR: BLACK

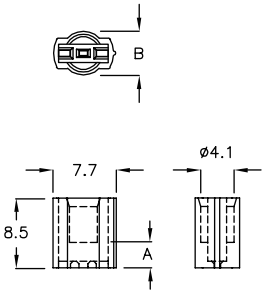

FOR Ø3 3PIN LED			
PART NO	A	B	PACKAGE
QBU-03	3.1	Ø5.4	2000

返回图片索引

LED 套 LED HOLDER 4-50-1

- MATERIAL: NYLON 66(UL)
- FLAME CLASS: 94V-0/94V-2
- COLOR: BLACK

FOR ø3 3PIN LED				
PART NO	A	B	D	PACKAGE
QLH-01	1.35	ø6.6	6.0	2000

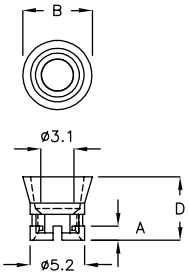

LED 套 LED HOLDER 4-50-2

- MATERIAL: NYLON 66(UL)
- FLAME CLASS: 94V-0/94V-2
- COLOR: BLACK

FOR ø3 3PIN LED				
PART NO	A	B	D	PACKAGE
QLH-2A	1.35	ø8.0	7.5	2000

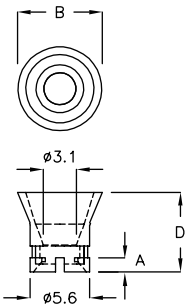

LED 套 LED HOLDER 4-50-3

- MATERIAL: NYLON 66(UL)
- FLAME CLASS: 94V-0/94V-2
- COLOR: BLACK

FOR ø3 3PIN LED					
PART NO	A	B	C	D	PACKAGE
QLM-3AF	1.3	ø8.0	ø5.6	7.7	2000
QLM-3CP	1.3	ø6.6	ø5.2	6.0	

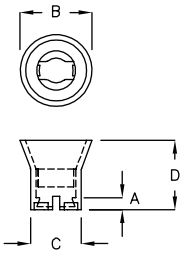

LED 座 LED HOUSING 4-50-4

- MATERIAL: NYLON 66(UL)
- FLAME CLASS: 94V-0/94V-2
- COLOR: BLACK

FOR ø3 3PIN LED					
PART NO	A	B	C	D	PACKAGE
QLP-3CA	1.3	ø8.0	8.4	7.7	2000
QLP-3FG	1.3	ø6.6	7.8	7.0	

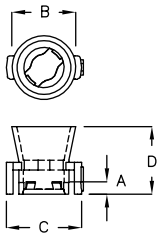

LED 座 LED HOUSING 4-50-5

- MATERIAL: NYLON 66(UL)
- FLAME CLASS: 94V-0/94V-2
- COLOR: BLACK

FOR ø3 2PIN LED				
PART NO	A	B	D	PACKAGE
QLR-3KH	2.35	11.5	10.2	2000

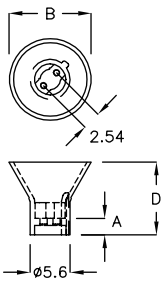

返回图片索引

LED 套 LED HOLDER 4-51-1

- MATERIAL: TPE
- COLOR: BLACK

FOR ø3 2PIN LED			
PART NO	A	B	PACKAGE
MTD-13HK	10.5	ø8.1	1000

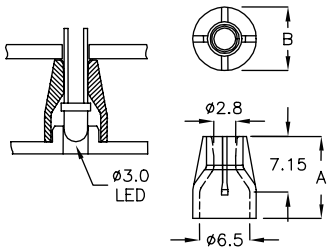

LED 套 LED HOLDER 4-51-2

- MATERIAL: NYLON 66(UL)
- FLAME CLASS: 94V-0/94V-2
- COLOR: NATURAL

FOR ø5 3PIN LED				
PART NO	A	B	C	PACKAGE
LED-1x3A	1.6	ø7.4	0.5	2000

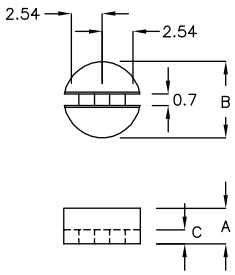

LED 套 LED HOLDER 4-51-3

- MATERIAL: NYLON 66(UL)
- FLAME CLASS: 94V-0/94V-2
- COLOR: NATURAL

FOR ø3 3PIN LED				
PART NO	A	B	C	PACKAGE
LED-3x3A	3.0	5.0	1.0	2000
LED-4x3A	4.0	5.0	1.0	
LED-5x3A	5.0	5.0	1.5	
LED-5Cx3A	5.5	5.0	1.5	
LED-14x3A	14.0	5.0	9.0	1000

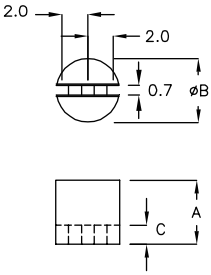

LED 套 LED HOLDER 4-51-4

- MATERIAL: NYLON 66(UL)
- FLAME CLASS: 94V-0/94V-2
- COLOR: NATURAL

FOR ø5 3PIN LED				
PART NO	A	B	D	PACKAGE
QLF-3A	2.8	ø7.1	6.6	2000

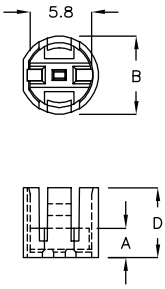

LED 套 LED HOLDER 4-51-5

- MATERIAL: NYLON 66(UL)
- FLAME CLASS: 94V-0/94V-2
- COLOR: NATURAL

FOR ø5 3PIN LED				
PART NO	A	B	D	PACKAGE
LED-2Mx3	2.6	ø7.4	6.6	1000

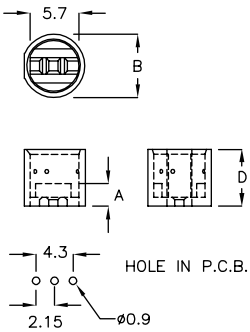

LED 套 LED HOLDER 4-52-1

- MATERIAL: NYLON 66(UL)
- FLAME CLASS: 94V-0/94V-2
- COLOR: NATURAL

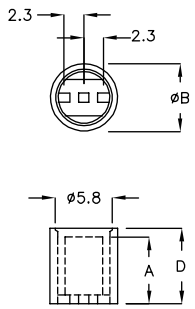

FOR ø5 3PIN LED				
PART NO	A	B	D	PACKAGE
LED-5Sx3	5.0	7.4	6.0	2000
LED-4Sx3	4.4	7.4	6.0	
LED-5x3	5.5	7.4	6.5	1000
LED-5Kx3	5.0	7.4	7.7	
LED-7x3	7.0	7.5	8.1	
LED-8x3	8.0	7.4	9.0	
LED-8Mx3	8.5	7.4	9.5	
LED-10x3	10.5	7.4	11.5	
LED-16x3	13.8	7.2	16.0	500

LED 套 LED HOLDER 4-52-2

- MATERIAL: NYLON 66(UL)
- FLAME CLASS: 94V-0/94V-2
- COLOR: NATURAL

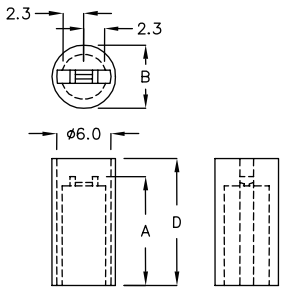

FOR ø5 3PIN LED				
PART NO	A	B	D	PACKAGE
LED-14X3	12.0	ø7.0	14.0	500

LED 套 LED HOLDER 4-52-3

- MATERIAL: NYLON 66(UL)
- FLAME CLASS: 94V-0/94V-2
- COLOR: NATURAL

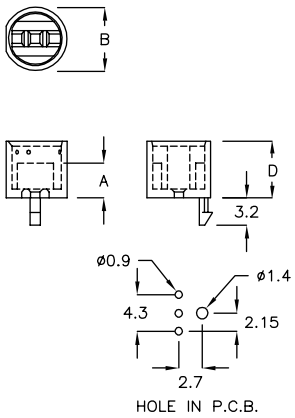

FOR ø5 3PIN LED				
PART NO	A	B	D	PACKAGE
LED-1Tx3	2.6	ø7.4	6.6	1000
LED-4Tx3	4.0	ø7.4	6.7	

LED 套 LED HOLDER 4-52-4

- MATERIAL: NYLON 66(UL)
- FLAME CLASS: 94V-0/94V-2
- COLOR: NATURAL

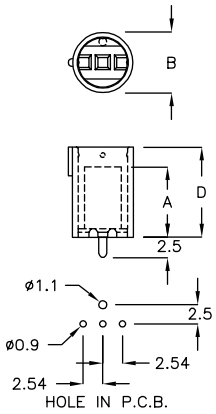

FOR ø5 3PIN LED				
PART NO	A	B	D	PACKAGE
QBE-8M	8.5	ø7.5	10.9	1000

返回图片索引

LED 套 LED HOLDER 4-53-1

- MATERIAL: NYLON 66(UL)
- FLAME CLASS: 94V-0/94V-2
- COLOR: NATURAL

FOR ø5 3PIN LED			
PART NO	A	B	PACKAGE
QBK-08	8.0	ø7.4	2000

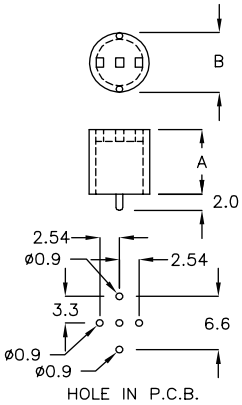

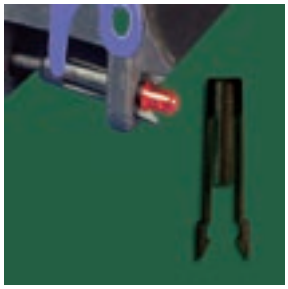

固定座 MOUNT 4-53-2

- MATERIAL: NYLON 66(UL)
- FLAME CLASS: 94V-0/94V-2
- COLOR: BLACK

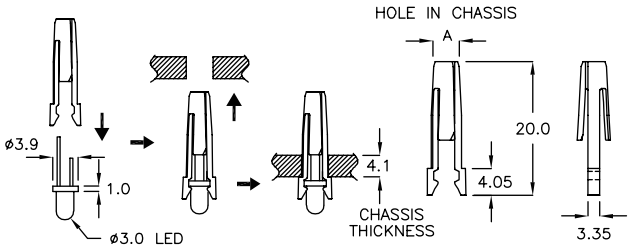

PART NO	A HOLE IN CHASSIS	PACKAGE
MTX-4JQ	ø4.5	1000

LED座 LED HOUSING 4-53-3

- MATERIAL: NYLON 66(UL)
- FLAME CLASS: 94V-0/94V-2
- COLOR: BLACK

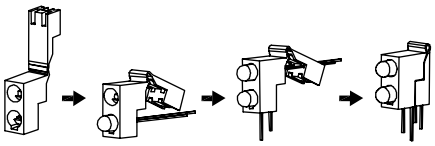

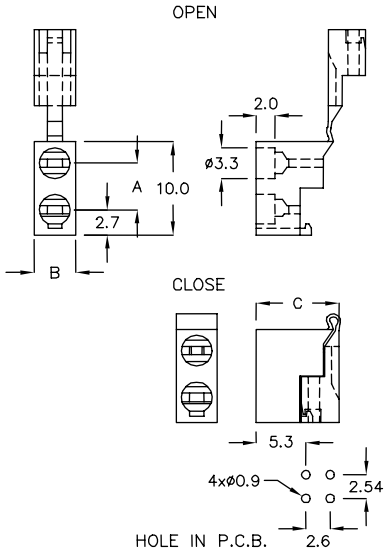

FOR ø3 2PIN LED				
PART NO	A	B	C	PACKAGE
2LED-3Q	5.0	4.5	8.9	1000

返回图片索引

LED 座 LED HOUSING 4-54-1

- MATERIAL: NYLON 66(UL)
- FLAME CLASS: 94V-0/94V-2
- COLOR: BLACK

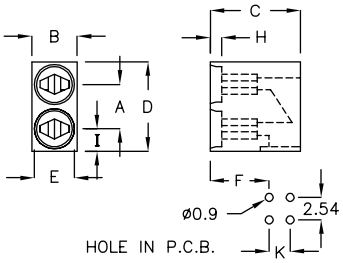

PART NO	A	B	C	D	E	F	H	I	K	SUITABLE LED	PACKAGE
2LED-3	5.0	5.1	10.1	10.0	ø3.9	7.1	1.3	2.5	2.6	ø3 2PIN	1000

LED 座 LED HOUSING 4-54-2

- MATERIAL: NYLON 66(UL)
- FLAME CLASS: 94V-0/94V-2
- COLOR: BLACK

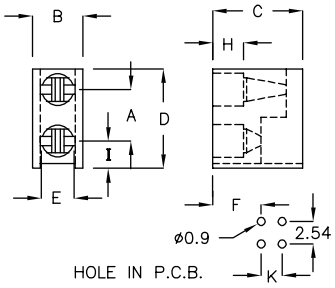

PART NO	A	B	C	D	E	F	H	I	K	SUITABLE LED	PACKAGE
2LED-3A	5.0	4.4	8.8	9.7	ø3.2	5.2	2.0	2.7	2.5	ø3 2PIN	1000
2LED-3B	5.0	5.0	8.9	9.8	ø3.2	5.2	3.0	2.7	2.5	ø3 2PIN	
2LED-3C	5.0	5.0	10.1	9.6	ø3.2	7.1	1.3	2.5	2.6	ø3 2PIN	
2LED-3D	5.0	4.4	9.0	9.8	ø3.4	5.45	1.5	2.6	2.55	ø3 2PIN	
2LED-3E	5.0	4.4	9.0	9.8	ø3.4	5.45	2.0	2.6	2.55	ø3 2PIN	
2LED-3P	6.0	4.4	9.7	13.5	ø3.3	6.2	2.0	5.0	2.55	ø3 2PIN	

LED 座 LED HOUSING 4-54-3

- MATERIAL: NYLON 66(UL)
- FLAME CLASS: 94V-0/94V-2
- COLOR: BLACK

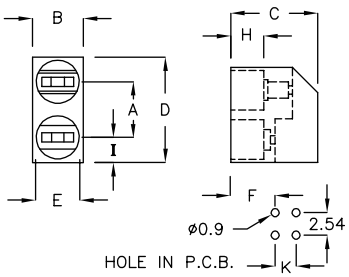

PART NO	A	B	C	D	E	F	K	H	I	SUITABLE LED	PACKAGE
2LED-5	6.2	5.9	11.0	12.0	ø5.0	6.1	2.4	4.2	2.85	ø5 2PIN	500

LED 座 LED HOUSING 4-54-4

- MATERIAL: NYLON 66(UL)
- FLAME CLASS: 94V-0/94V-2
- COLOR: BLACK

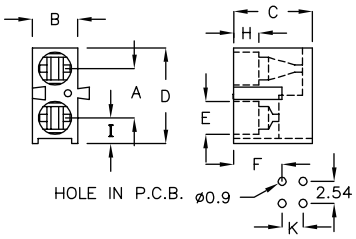

FOR ø3 2PIN LED										
PART NO	A	B	C	D	E	F	H	I	K	PACKAGE
2LED-3F	5.0	4.6	8.0	9.7	ø3.3	5.1	2.6	2.6	2.4	1000
2LED-3H	5.1	4.3	8.1	12.6	ø3.2	4.8	2.0	4.6	2.6	
2LED-3J	5.0	4.4	9.0	9.7	ø3.35	5.3	1.5	2.6	2.5	

返回图片索引

LED 座 LED HOUSING 4-55-1

- MATERIAL: NYLON 66(UL)
- FLAME CLASS: 94V-0/94V-2
- COLOR: BLACK

FOR ø3 2PIN LED							
PART NO	A	B	C	D	E	F	PACKAGE
2LED-3K	5.0	4.4	9.0	17.1	ø3.4	5.0	1000

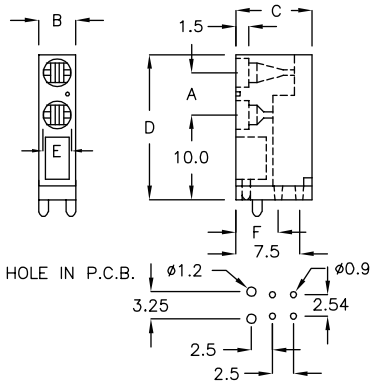

LED 座 LED HOUSING 4-55-2

- MATERIAL: NYLON 66(UL)
- FLAME CLASS: 94V-0/94V-2
- COLOR: BLACK

NEW

Built-In Clamp Function

FOR ø3 2PIN LED				
PART NO	A	B	C	PACKAGE
★ 2LED-3N	6.3	5.9	11.0	500

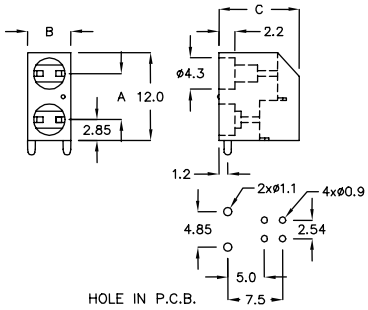

LED 座 LED HOUSING 4-55-3

- MATERIAL: NYLON 66(UL)
- FLAME CLASS: 94V-0/94V-2
- COLOR: BLACK

FOR ø5 2 PIN LED ø5 3 PIN LED		
PART NO	A	PACKAGE
2LED-5A	7.45	500

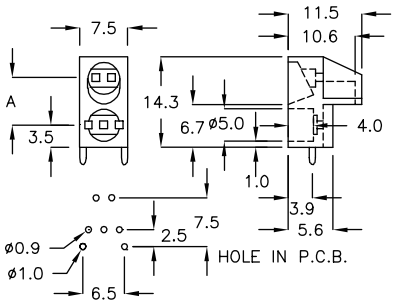

LED 座 LED HOUSING 4-55-4

- MATERIAL: PC(UL)
- FLAME CLASS: 94V-2
- COLOR: BLACK

Built-In Clamp Function

PART NO	A	B	C	D	E	SUITABLE LED	PACKAGE
2LED-5C	6.3	6.0	11.2	12.5	ø4.9	ø5 2PIN	500

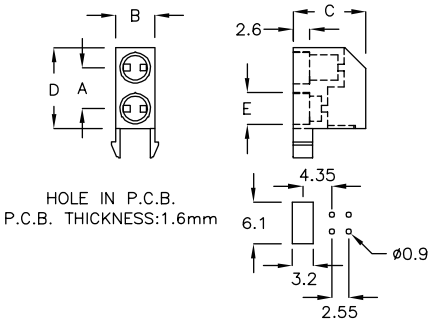

LED 座 LED HOUSING 4-55-5

- MATERIAL: NYLON 66(UL)
- FLAME CLASS: 94V-0/94V-2
- COLOR: BLACK

Built-In Clamp Function

FOR ø3 2PIN LED			
PART NO	A	H	PACKAGE
3LED-3AT	5.1	3.2	500
3LED-3BT	5.1	2.0	

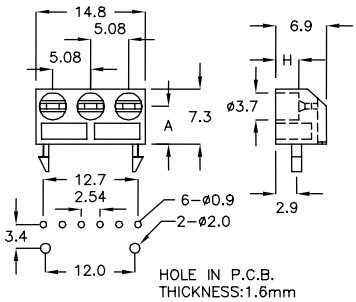

返回图片索引

LED 座 LED HOUSING 4-56-1

- MATERIAL: NYLON 66(UL)
- FLAME CLASS: 94V-0/94V-2
- COLOR: BLACK

Built–In Clamp Function

FOR ø3 2PIN LED		
PART NO	A	PACKAGE
3LED–3C	5.1	500

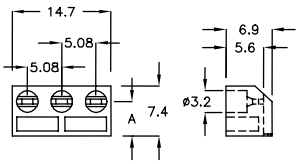

LED 座 LED HOUSING 4-56-2

- MATERIAL: NYLON 66(UL)
- FLAME CLASS: 94V-0/94V-2
- COLOR: BLACK

Built–In Clamp Function

FOR ø3 2PIN/3PIN LED FOR QUADRATE 2PIN/3PIN LED		
PART NO	A	PACKAGE
3LED–3H	7.25	500

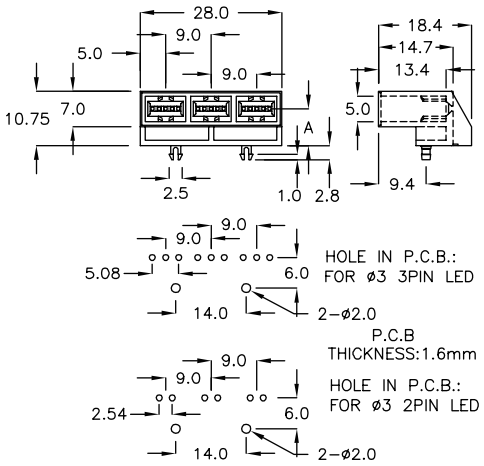

LED 座 LED HOUSING 4-56-3

- MATERIAL: NYLON 66(UL)
- FLAME CLASS: 94V-0/94V-2
- COLOR: BLACK

Built–In Clamp Function

FOR ø5 3PIN LED x1 ø5 2PIN LED x2		
PART NO	A	PACKAGE
3LED–7	7.6	1000

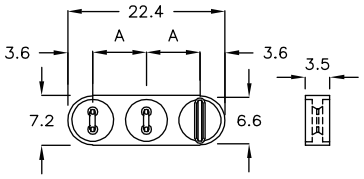

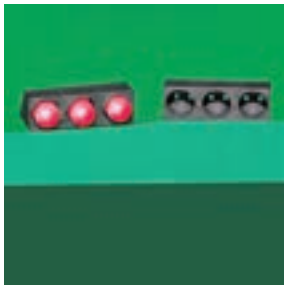

LED 座 LED HOUSING 4-56-4

- MATERIAL: NYLON 66(UL)
- FLAME CLASS: 94V-0/94V-2
- COLOR: BLACK

Built–In Clamp Function

FOR ø5 2PIN LED		
PART NO	A	PACKAGE
3LED–5	3.1	500

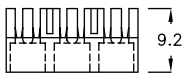

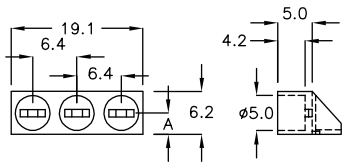

LED 座 LED HOUSING 4-56-5

- MATERIAL: NYLON 66(UL)+RED LED
- FLAME CLASS: 94V-0/94V-2
- COLOR: BLACK

Built–In Clamp Function

FOR ø5 2PIN LED		
PART NO	A	PACKAGE
3LED–5–R	3.1	500

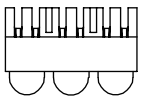

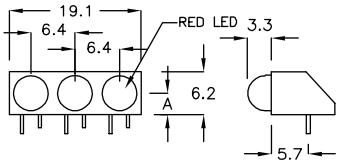

返回图片索引

LED 座 LED HOUSING 4-57-1

- MATERIAL: NYLON 66(UL)
- FLAME CLASS: 94V-0/94V-2
- COLOR: BLACK

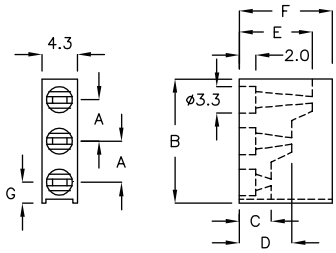

Built–In Clamp Function

FOR ø3 2PIN LED								
PART NO	A	B	C	D	E	F	G	PACKAGE
3LED–3	5.08	15.25	3.9	6.45	9.0	11.45	2.50	500
3LED–3E	6.0	17.0	5.7	8.25	10.8	12.5	2.70	

LED 座 LED HOUSING 4-57-2

- MATERIAL: NYLON 66(UL)
- FLAME CLASS: 94V-0/94V-2
- COLOR: BLACK

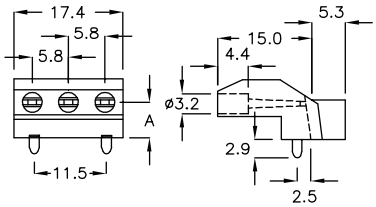

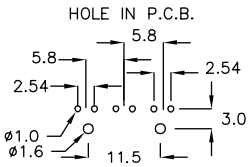

Built–In Clamp Function

FOR ø3 2PIN LED		
PART NO	A	PACKAGE
3LEL–6	5.5	200

LED 座 LED HOUSING 4-57-3

- MATERIAL: NYLON 66(UL)
- FLAME CLASS: 94V-0/94V-2
- COLOR: NATURAL

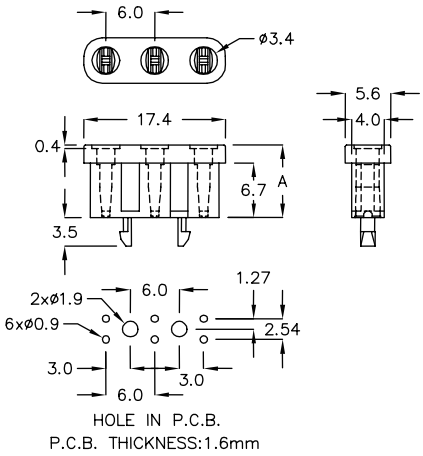

Built–In Clamp Function

FOR ø3 2PIN LED		
PART NO	A	PACKAGE
3LED–3M	8.9	500

LED 座 LED HOUSING 4-57-4

- MATERIAL: NYLON 66(UL)
- FLAME CLASS: 94V-0/94V-2
- COLOR: BLACK

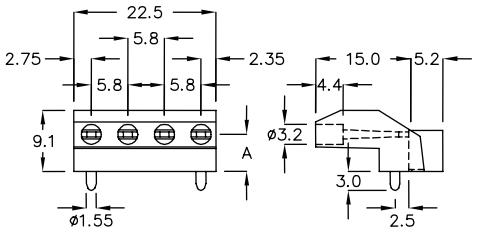

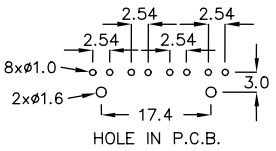

Built–In Clamp Function

FOR ø3 2PIN LED		
PART NO	A	PACKAGE
4LEL–6	5.6	200

返回图片索引

LED 座 LED HOUSING 4-58-1

- MATERIAL: NYLON 66(UL)
- FLAME CLASS: 94V-0/94V-2
- COLOR: BLACK

FOR ø3 2PIN LED		
PART NO	A	PACKAGE
4LED−3	5.0	500

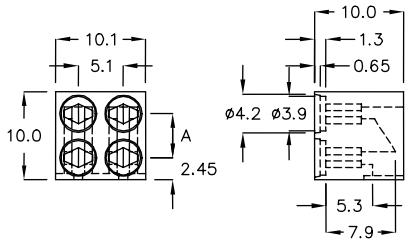

LED 座 LED HOUSING 4-58-2

- MATERIAL: NYLON 66(UL)
- FLAME CLASS: 94V-0/94V-2
- COLOR: BLACK

Built−In Clamp Function

FOR ø3 2PIN LED		
PART NO	E	PACKAGE
4LEL−6A	7.0	200

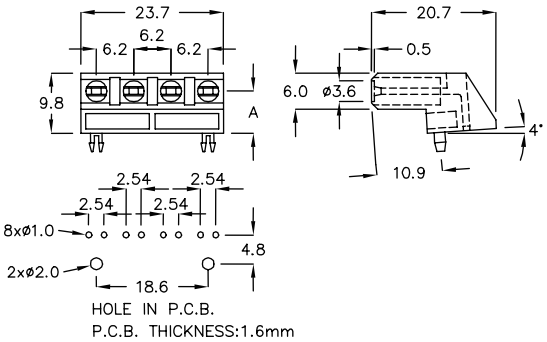

LED 座 LED HOUSING 4-58-3

- MATERIAL: NYLON 66(UL)
- FLAME CLASS: 94V-0/94V-2
- COLOR: BLACK

Built−In Clamp Function

FOR ø3 2PIN LED		
PART NO	A	PACKAGE
4LEL−6C	5.25	200

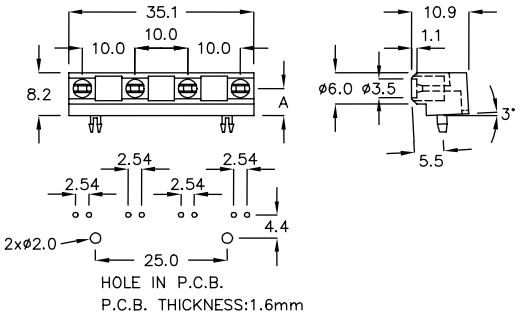

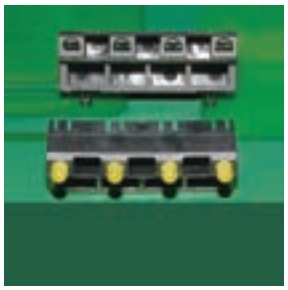

LED 座 LED HOUSING 4-58-4

- MATERIAL: NYLON 66(UL)
- FLAME CLASS: 94V-0/94V-2
- COLOR: BLACK

Built−In Clamp Function

FOR ø3 2PIN LED		
PART NO	A	PACKAGE
4LEL−6D	9.0	200

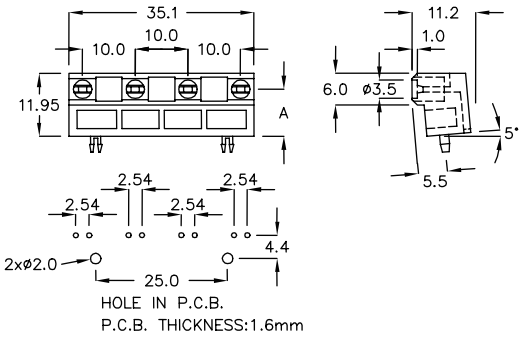

LED 座 LED HOUSING 4-58-5

- MATERIAL: NYLON 66(UL)+30%FRP
- FLAME CLASS: 94V-0/94V-2
- COLOR: BLACK

FOR ø5 2PIN ø5 3PIN LED		
PART NO	A	PACKAGE
4LED−1A	14.0	500

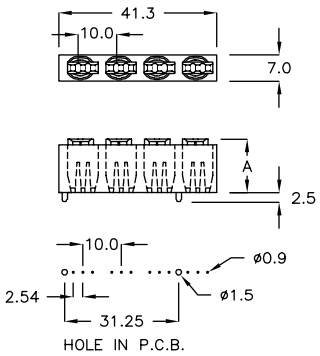

返回图片索引

LED 座 LED HOUSING 4-59-1

- MATERIAL: NYLON 66(UL)
- FLAME CLASS: 94V-0/94V-2
- COLOR: BLACK

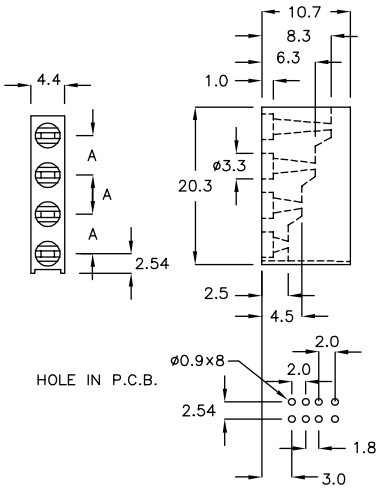

FOR ø3 2PIN LED		
PART NO	A	PACKAGE
4LED-3C	5.08	500

LED 座 LED HOUSING 4-59-2

- MATERIAL: NYLON 66(UL)
- FLAME CLASS: 94V-0/94V-2
- COLOR: BLACK

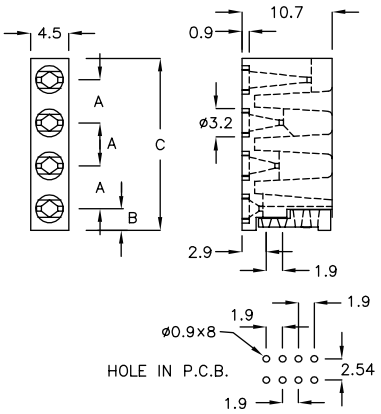

FOR ø3 2PIN LED				
PART NO	A	B	C	PACKAGE
4LED-3D	5.1	2.54	20.3	500
4LED-3K	5.1	4.75	22.5	

LED 座 LED HOUSING 4-59-3

- MATERIAL: NYLON 66(UL)
- FLAME CLASS: 94V-0/94V-2
- COLOR: BLACK

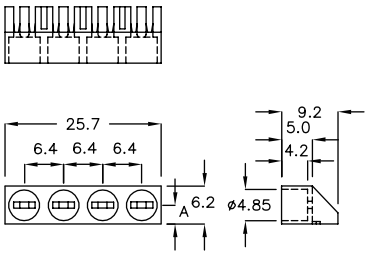

Built-In Clamp Function

FOR ø5 2PIN LED		
PART NO	A	PACKAGE
4LED-5	3.1	500

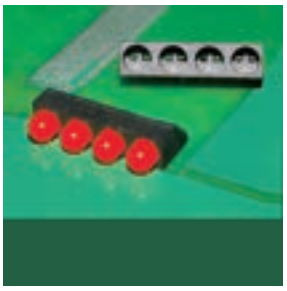

LED 座 LED HOUSING 4-59-4

- MATERIAL: NYLON 66(UL)+RED LED
- FLAME CLASS: 94V-0/94V-2
- COLOR: BLACK

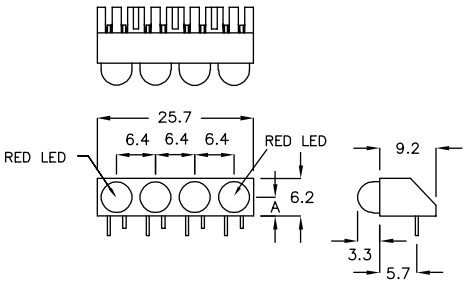

Built-In Clamp Function

FOR ø5 2PIN LED		
PART NO	A	PACKAGE
4LED-5-R	3.1	500

返回图片索引

LED 座 LED HOUSING 4-60-1

- MATERIAL: NYLON 66(UL)
- FLAME CLASS: 94V-0/94V-2
- COLOR: BLACK

Built–In Clamp Function

FOR ø3 2PIN LED		
PART NO	A	PACKAGE
5LED–3	5.08	500

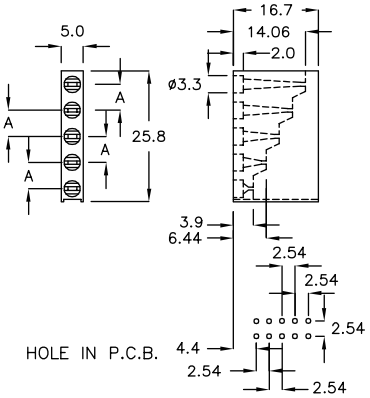

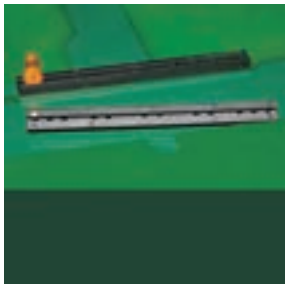

LED 座 LED HOUSING 4-60-2

- MATERIAL: NYLON 66(UL)
- FLAME CLASS: 94V-0/94V-2
- COLOR: BLACK

Built–In Clamp Function

FOR ø5 2PIN LED x 3 FOR ø5 3PIN LED x 2		
PART NO	A	PACKAGE
QLD–44	9.0	1000

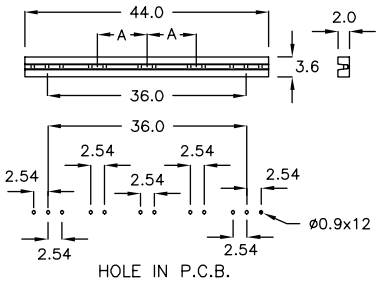

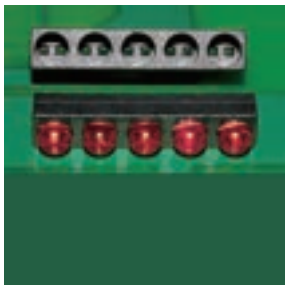

LED 座 LED HOUSING 4-60-3

- MATERIAL: NYLON 66(UL)
- FLAME CLASS: 94V-0/94V-2
- COLOR: BLACK

Built–In Clamp Function

FOR ø5 2PIN LED		
PART NO	A	PACKAGE
5LED–5	3.1	500

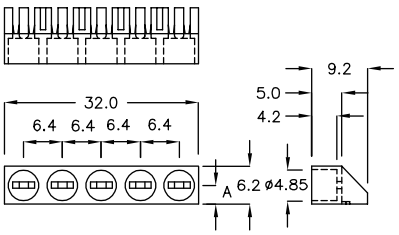

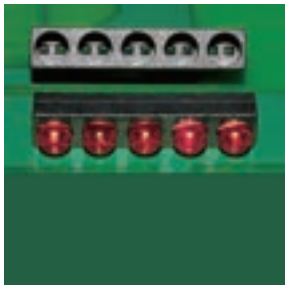

LED 座 LED HOUSING 4-60-4

- MATERIAL: NYLON 66(UL)+RED LED
- FLAME CLASS: 94V-0/94V-2
- COLOR: BLACK

Built–In Clamp Function

FOR ø5 2PIN LED		
PART NO	A	PACKAGE
5LED–5–R	3.1	500

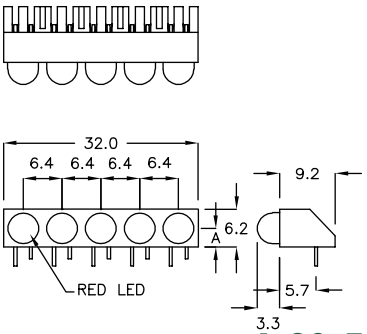

LED 座 LED HOUSING 4-60-5

- MATERIAL: NYLON 66(UL)
- FLAME CLASS: 94V-0/94V-2
- COLOR: BLACK

Built–In Clamp Function

FOR ø3 2PIN LED		
PART NO	A	PACKAGE
5LEL–6	5.8	200

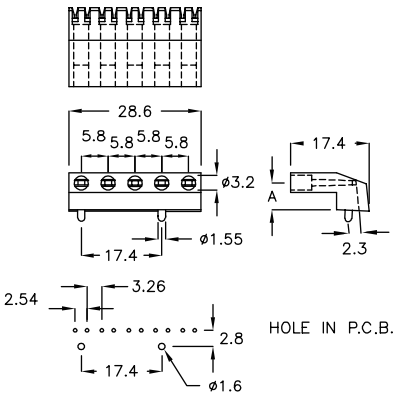

返回图片索引

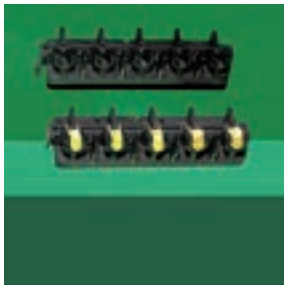

LED 座 LED HOUSING 4-61-1

- MATERIAL: NYLON 66(UL)
- FLAME CLASS: 94V-0/94V-2
- COLOR: BLACK

FOR ø3 2PIN LED		
PART NO	A	PACKAGE
5LED-3AT	8.5	200

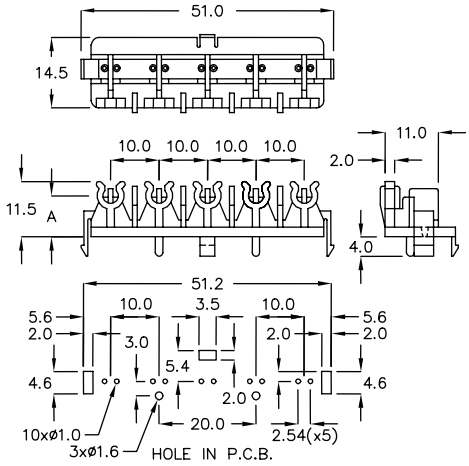

LED 座 LED HOUSING 4-61-2

- MATERIAL: NYLON 66(UL)
- FLAME CLASS: 94V-0/94V-2
- COLOR: BLACK

FOR ø5 2PIN LED		
PART NO	A	PACKAGE
5LED-5BT	8.5	200

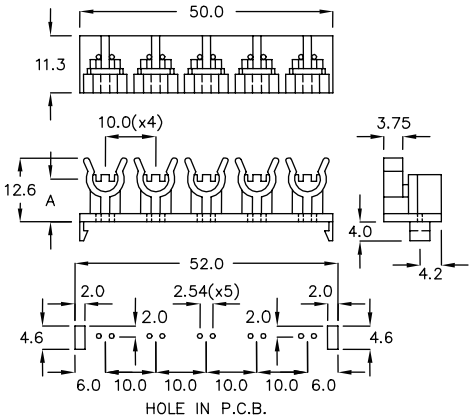

LED 座 LED HOUSING 4-61-3

- MATERIAL: NYLON 66(UL)
- FLAME CLASS: 94V-0/94V-2
- COLOR: BLACK

Built-In Clamp Function

FOR ø3 2PIN LED		
PART NO	A	PACKAGE
6LED-3A	10.0	200

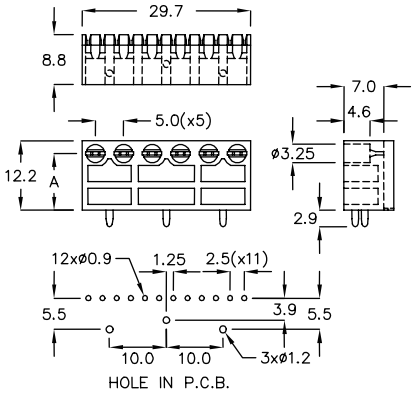

LED 座 LED HOUSING 4-61-4

- MATERIAL: NYLON 66(UL)
- FLAME CLASS: 94V-0/94V-2
- COLOR: BLACK

Built-In Clamp Function

FOR ø3 2PIN LED		
PART NO	A	PACKAGE
8LED-3	10.0	200

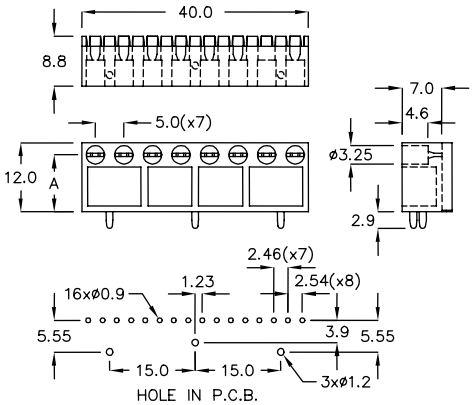

返回图片索引

LED 座 LED HOUSING 4-62-1

- MATERIAL: NYLON 66(UL)
- FLAME CLASS: 94V-0/94V-2
- COLOR: BLACK

FOR QUADRATE 2PIN LED		
PART NO	A	PACKAGE
10LED-1	7.0	200

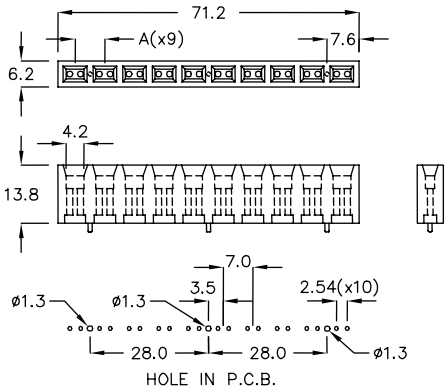

LED 座 LED HOUSING 4-62-2

- MATERIAL: NYLON 66(UL)
- FLAME CLASS: 94V-0/94V-2
- COLOR: BLACK

FOR QUADRATE 2PIN LED		
PART NO	A	PACKAGE
15LED-1	4.5	100

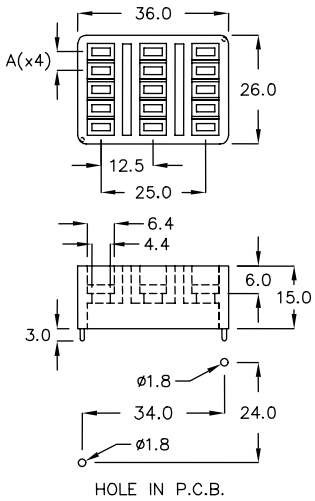

返回图片索引

扣具，铆钉
FASTENER, SNAP RIVET

05

螺丝，螺帽
SCREW, SCREW NUT

风扇铆钉
FAN SNAP RIVET

缓冲垫片 SILICONE BUMPER 5-2-1

- MATERIAL: SILICONE
- COLOR: BLACK

PART NO	A CHASSIS THICKNESS	B HOLE IN CHASSIS	E	PACKAGE
SRJ-3NS	2.3	ø3.5	13.7	2000
SRJ-3TG	4.8~5.0	ø3.5	16.2	

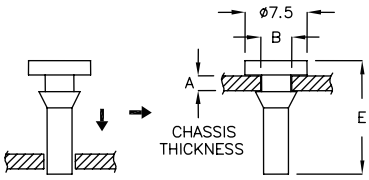

缓冲垫片 SILICONE BUMPER 5-2-2

- MATERIAL: SILICONE
- COLOR: BLACK

PART NO	A CHASSIS THICKNESS	B HOLE IN CHASSIS	PACKAGE
SRF-3A	1.9	ø3.5	2000

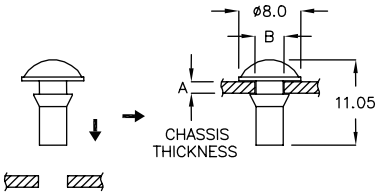

风扇铆钉 FAN SNAP RIVET 5-2-3

- MATERIAL: TPE
- COLOR: BLACK

PART NO	A	C HOLE IN FAN	PACKAGE
SRQB-5A	4.3	ø3.5	2000
★ SRQB-5C	4.3	ø4.5	

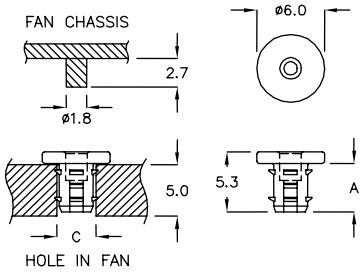

风扇铆钉 FAN SNAP RIVET 5-2-4

- MATERIAL: TPE
- COLOR: BLACK

PART NO	A	C HOLE IN FAN	PACKAGE
SRQF-3AT	4.0	ø3.5	2000

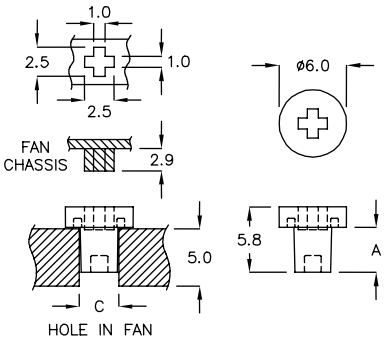

风扇铆钉 FAN SNAP RIVET 5-2-5

- MATERIAL: TPE
- COLOR: BLACK

PART NO	A	C HOLE IN FAN	PACKAGE
SRQA-4HC	4.85	ø4.5	2000

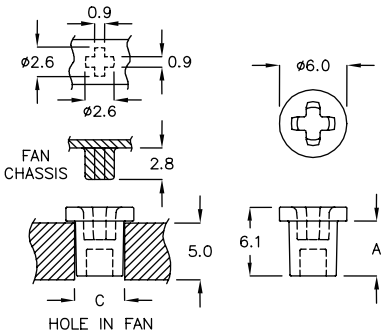

返回图片索引

风扇铆钉 FAN SNAP RIVET 5-3-1

- COLOR: BLACK

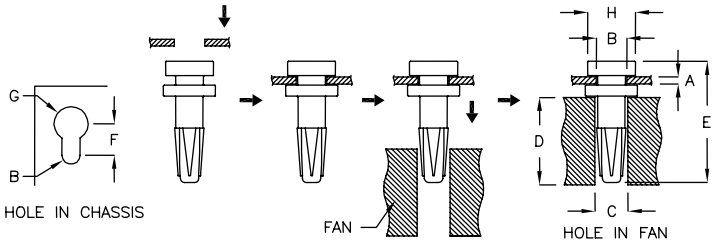

PART NO	MATERIAL	A CHASSIS THICKNESS	B HOLE IN CHASSIS	C HOLE IN FAN	D FAN CHASSIS THICKNESS	E	F	G	H	PACKAGE
SRYC-3HT	SILICONE	0.8~1.2	ø4.0	ø3.5	5.0	16.8	8.0	ø8.5	ø7.8	2000
SRYC-3XZ	TPE	1.0	ø3.5	ø3.6	>11.0	15.5	6.0	ø6.5	ø6.0	

风扇铆钉 FAN SNAP RIVET 5-3-2

- MATERIAL: TPE
- COLOR: BLACK

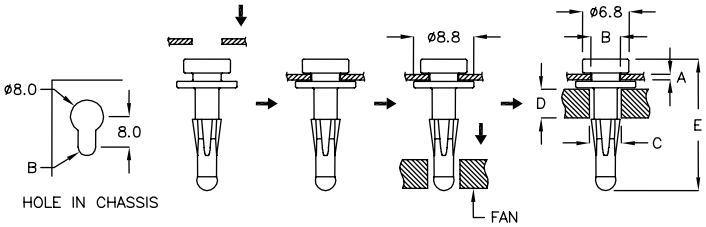

PART NO	A CHASSIS THICKNESS	B HOLE IN CHASSIS	C HOLE IN FAN	D FAN CHASSIS THICKNESS	E	PACKAGE
SRYK-3AC	0.8	ø4.1	ø3.5	5.0	19.2	2000

风扇铆钉 FAN SNAP RIVET 5-3-3

- MATERIAL: TPE
- COLOR: BLACK

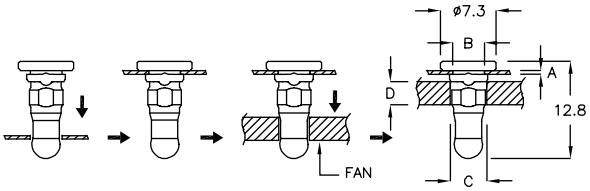

PART NO	A CHASSIS THICKNESS	B HOLE IN CHASSIS	C HOLE IN CHASSIS	D FAN CHASSIS THICKNESS	PACKAGE
SRCQ-4MT	0.5	ø4.3	ø4.5	4.0	2000

风扇铆钉 FAN SNAP RIVET 5-3-4

- MATERIAL: TPE
- COLOR: BLACK

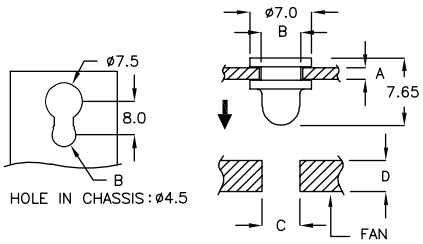

PART NO	A CHASSIS THICKNESS	B HOLE IN CHASSIS	C HOLE IN FAN	D FAN CHASSIS THICKNESS	PACKAGE
SRY-4XR	1.5	ø4.5	ø4.5	4.5	2000

风扇铆钉 FAN SNAP RIVET 5-4-1

- MATERIAL: TPE
- COLOR: BLACK

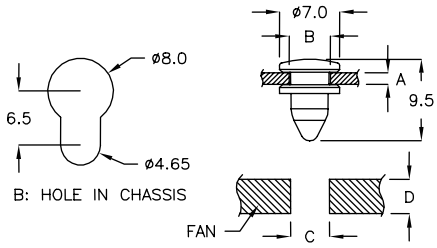

PART NO	A CHASSIS THICKNESS	C HOLE IN FAN	D FAN CHASSIS THICKNESS	PACKAGE
SRYD-4TC	1.3	ø4.5	4.0	2000

风扇铆钉 FAN SNAP RIVET 5-4-2

- MATERIAL: TPE
- COLOR: BLACK

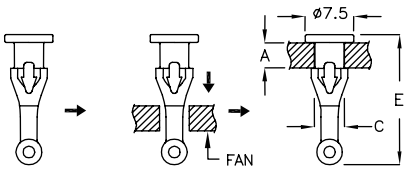

PART NO	A FAN CHASSIS THICKNESS	C HOLE IN FAN	E	PACKAGE
SRZ-4AT	4.0	ø4.5	20.1	2000

风扇铆钉 FAN SNAP RIVET 5-4-3

- MATERIAL: SILICONE
- COLOR: BLACK

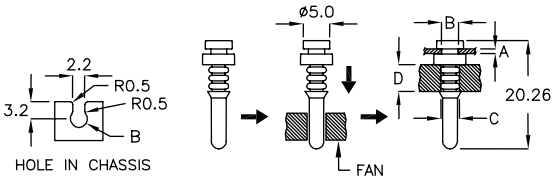

PART NO	A CHASSIS THICKNESS	B HOLE IN CHASSIS	C HOLE IN FAN	D FAN THICKNESS	PACKAGE
SRDM-20K	0.8	ø3.2	ø3.5	5.0	2000

风扇铆钉 FAN SNAP RIVET 5-4-4

- MATERIAL: TPE
- COLOR: BLACK

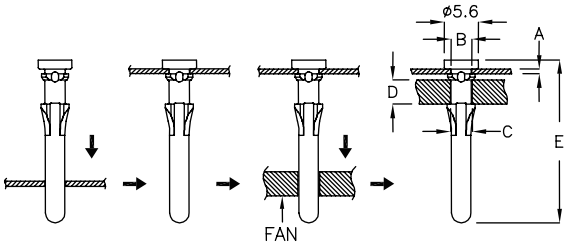

PART NO	A CHASSIS THICKNESS	B HOLE IN CHASSIS	C HOLE IN FAN	D FAN CHASSIS THICKNESS	E	PACKAGE
SRM-24NK	0.8	ø3.5	ø3.5	4.0	26.9	500

返回图片索引

风扇铆钉 FAN SNAP RIVET 5-5-1

- MATERIAL: TPE
- COLOR: BLACK

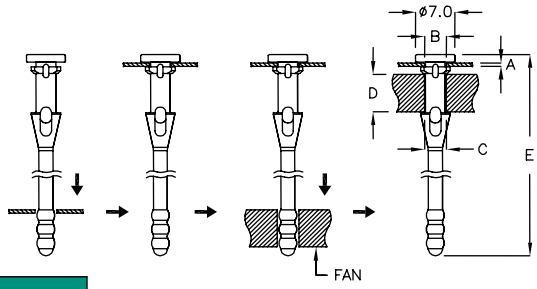

PART NO	A CHASSIS THICKNESS	B HOLE IN CHASSIS	C HOLE IN FAN	D FAN CHASSIS THICKNESS	E	PACKAGE
SRD-3GT	0.8	ø3.5	ø3.5	28.0	73.0	1000

风扇铆钉 FAN SNAP RIVET 5-5-2

- MATERIAL: SILICONE
- COLOR: BLACK

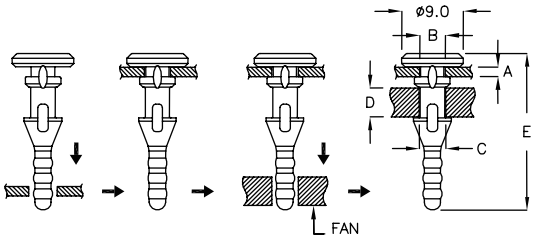

PART NO	A CHASSIS THICKNESS	B HOLE IN CHASSIS	C HOLE IN FAN	D FAN CHASSIS THICKNESS	E	PACKAGE
SRD-4WY	1.5	ø3.5	ø3.5	5.0	23.0	1000

风扇铆钉 FAN SNAP RIVET 5-5-3

- MATERIAL: TPE
- COLOR: BLACK

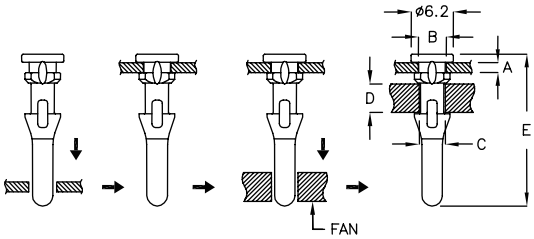

PART NO	A CHASSIS THICKNESS	B HOLE IN CHASSIS	C HOLE IN FAN	D FAN CHASSIS THICKNESS	E	PACKAGE
SRDK-22A	1.5	ø4.0	ø3.5	5.0	22.2	1000

风扇铆钉 FAN SNAP RIVET 5-5-4

- MATERIAL: SILICONE
- COLOR: BLACK

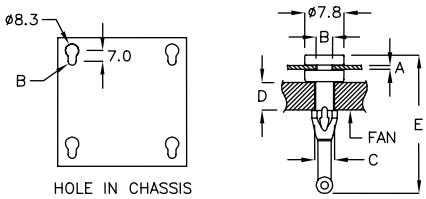

PART NO	A CHASSIS THICKNESS	B HOLE IN CHASSIS	C HOLE IN FAN	D FAN CHASSIS THICKNESS	E	PACKAGE
SR-17KM	1.0	ø3.0	ø3.5	6.5	27.6	2000
SR-20RQ	1.0	ø4.0	ø3.5	5.0	25.45	

风扇铆钉 FAN SNAP RIVET 5-6-1

- COLOR: BLACK

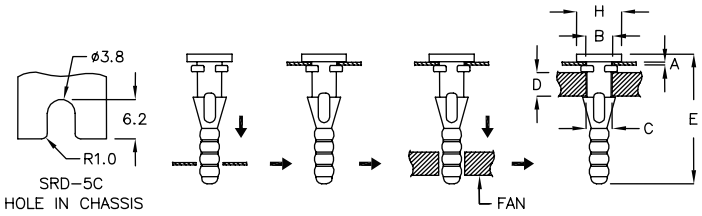

PART NO	MATERIAL	A CHASSIS THICKNESS	B HOLE IN CHASSIS	C HOLE IN FAN	D FAN CHASSIS THICKNESS	E	H	PACKAGE
SRD-3C	SILICONE	1.0	ø3.6	ø3.5	5.0	20.0	ø5.8	2000
SRD-3MF	TPE	0.8	ø3.5	ø3.5	4.0	20.0	ø5.8	
SRD-5C	SILICONE	0.8		ø4.3	5.0	23.8	ø8.0	1000

风扇铆钉 FAN SNAP RIVET 5-6-2

- MATERIAL: SILICONE
- COLOR: BLACK

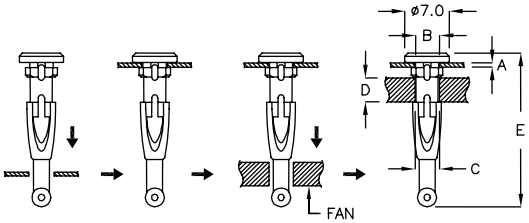

PART NO	A CHASSIS THICKNESS	B HOLE IN CHASSIS	C HOLE IN FAN	D FAN CHASSIS THICKNESS	E	PACKAGE
SRG-3A	0.8	ø3.7	ø3.5	5.0	24.3	1000

风扇铆钉 FAN SNAP RIVET 5-6-3

- MATERIAL: SILICONE
- COLOR: BLACK

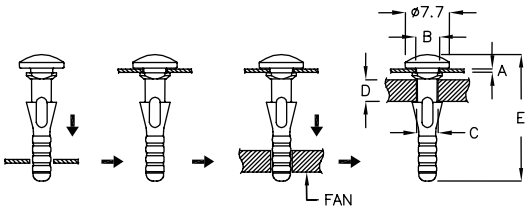

PART NO	A CHASSIS THICKNESS	B HOLE IN CHASSIS	C HOLE IN FAN	D FAN CHASSIS THICKNESS	E	PACKAGE
SRCK-3HR	1.0	ø4.0	ø3.5	5.0	22.0	2000

风扇铆钉 FAN SNAP RIVET 5-6-4

- MATERIAL: SILICONE
- COLOR: BLACK

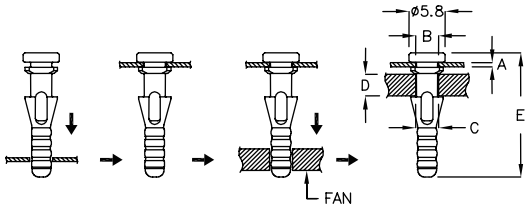

PART NO	A CHASSIS THICKNESS	B HOLE IN CHASSIS	C HOLE IN FAN	D FAN CHASSIS THICKNESS	E	PACKAGE
SRD-3FC	1.0	ø3.5	ø3.5	4.0	20.0	2000

返回图片索引

风扇铆钉 FAN SNAP RIVET 5-7-1

- MATERIAL: TPE
- COLOR: BLACK

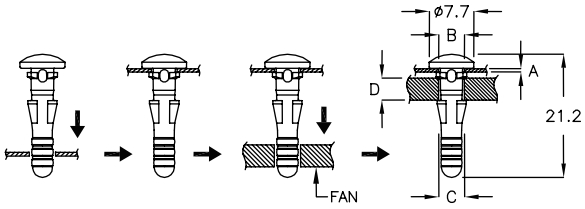

PART NO	A CHASSIS THICKNESS	B HOLE IN CHASSIS	C HOLE IN FAN	D FAN THICKNESS	PACKAGE
SRCK-4HT	1.0	ø4.0	ø4.0	4.0	2000

风扇铆钉 FAN SNAP RIVET 5-7-2

- MATERIAL: SILICONE
- COLOR: BLACK

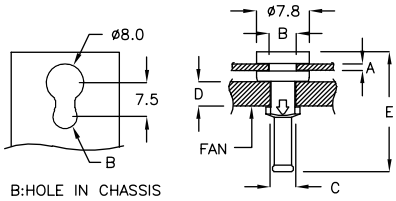

PART NO	A CHASSIS THICKNESS	B HOLE IN CHASSIS	C HOLE IN FAN	D FAN CHASSIS THICKNESS	E	PACKAGE
SRH-3M	1.0	ø4.0	ø3.5	4.0	17.7	2000

风扇铆钉 FAN SNAP RIVET 5-7-3

- MATERIAL: SILICONE
- COLOR: BLACK

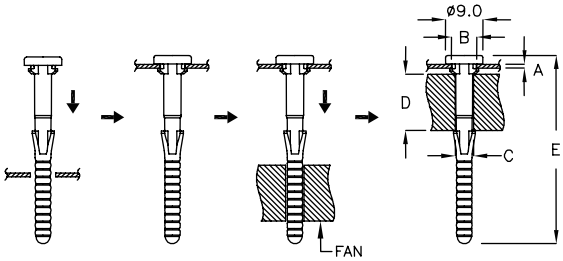

PART NO	A CHASSIS THICKNESS	B HOLE IN CHASSIS	C HOLE IN FAN	D FAN CHASSIS THICKNESS	E	PACKAGE
SRD-3TF	2.0	ø4.0	ø3.5	5.0	25.0	2000
SRD-4GM	0.8	ø6.0	ø4.3	15.0	44.7	

风扇铆钉 FAN SNAP RIVET 5-7-4

- MATERIAL: SILICONE
- COLOR: BLACK

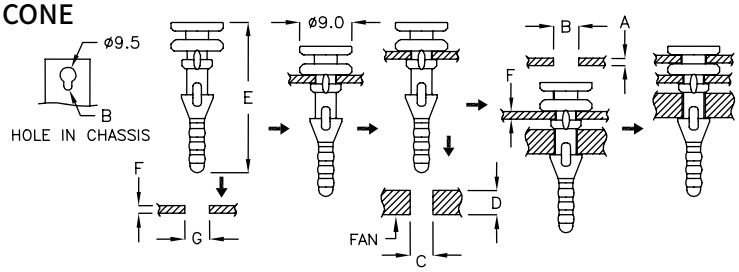

PART NO	A CHASSIS THICKNESS	B HOLE IN CHASSIS	C HOLE IN FAN	D FAN CHASSIS THICKNESS	E	F CHASSIS THICKNESS	G HOLE IN CHASSIS	PACKAGE
SRD-4PW	1.5	ø4.2	ø3.5	5.0	26.0	1.5	ø3.5	1000

返回图片索引

风扇铆钉 FAN SNAP RIVET 5-8-1

- MATERIAL: SILICONE
- COLOR: BLACK

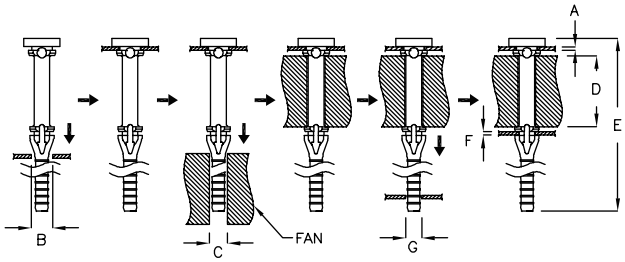

PART NO	A CHASSIS THICKNESS	B HOLE IN CHASSIS	C HOLE IN FAN	D FAN CHASSIS THICKNESS	E	F CHASSIS THICKNESS	G HOLE IN CHASSIS	PACKAGE
SRD-3QW	0.8	ø4.5	ø3.5	28.0	72.7	0.8	ø3.5	500

风扇铆钉 FAN SNAP RIVET 5-8-2

- MATERIAL: SILICONE
- COLOR: BLACK

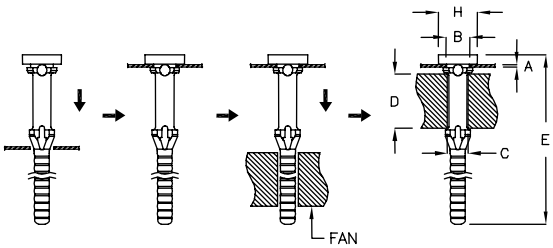

PART NO	A CHASSIS THICKNESS	B HOLE IN CHASSIS	C HOLE IN FAN	D FAN CHASSIS THICKNESS	E	H	PACKAGE
SRD-3A	0.8	ø4.5	ø3.5	28.0	70.7	ø7.8	500
SRD-3R	0.8	ø3.5	ø3.5	28.0	70.7	ø6.8	
★ SRD-3DQ	0.8	ø3.5	ø3.5	28.0	70.7	ø5.5	
SRD-3JK	0.8	ø4.5	ø3.5	20.0	54.7	ø7.8	
★ SRD-3WP	1.0	ø3.5	ø3.5	28.0	70.9	ø6.8	

风扇铆钉 FAN SNAP RIVET 5-8-3

- MATERIAL: SILICONE
- COLOR: BLACK

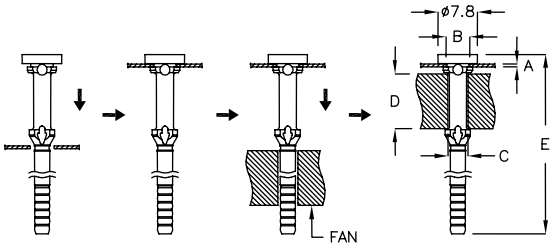

PART NO	A CHASSIS THICKNESS	B HOLE IN CHASSIS	C HOLE IN FAN	D FAN CHASSIS THICKNESS	E	PACKAGE
SRD-3AT	0.8	ø4.5	ø3.5	28.0	70.7	500

风扇铆钉 FAN SNAP RIVET 5-8-4

- MATERIAL: TPR
- COLOR: BLACK

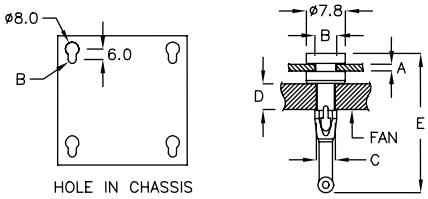

PART NO	A CHASSIS THICKNESS	B HOLE IN CHASSIS	C HOLE IN FAN	D FAN CHASSIS THICKNESS	E	PACKAGE
SR-17Y	1.6	ø4.1	ø3.6	6.5	27.65	2000
SR-20Y	1.6	ø4.1	ø3.6	5.5	25.0	

返回图片索引

风扇铆钉 FAN SNAP RIVET 5-9-1

- MATERIAL: SILICONE
- COLOR: BLACK

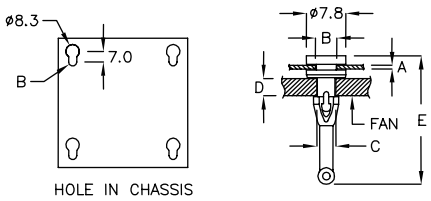

PART NO	A CHASSIS THICKNESS	B HOLE IN CHASSIS	C HOLE IN FAN	D FAN CHASSIS THICKNESS	E	PACKAGE
SR-41Y	1.0	ø4.0	ø4.0	4.0	25.5	2000

风扇铆钉 FAN SNAP RIVET 5-9-2

- MATERIAL: TPE
- COLOR: BLACK

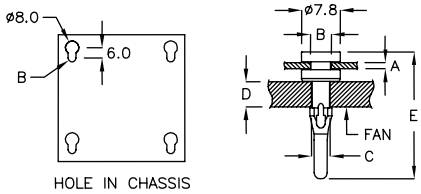

PART NO	A CHASSIS THICKNESS	B HOLE IN CHASSIS	C HOLE IN FAN	D FAN CHASSIS THICKNESS	E	PACKAGE
SR-20MK	1.6	ø4.1	ø3.6	5.5	25.7	2000

风扇铆钉 FAN SNAP RIVET 5-9-3

- MATERIAL: SILICONE
- COLOR: BLACK

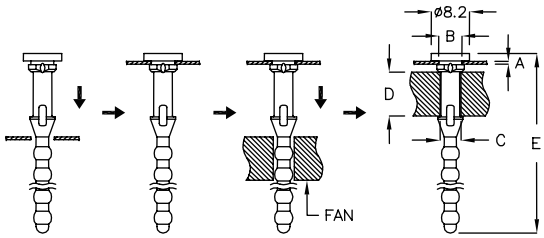

PART NO	A CHASSIS THICKNESS	B HOLE IN CHASSIS	C HOLE IN FAN	D FAN CHASSIS THICKNESS	E	PACKAGE
SRD-4A	1.0	ø4.4	ø4.0	25.4	65.8	500

风扇铆钉 FAN SNAP RIVET 5-9-4

- MATERIAL: SILICONE
- COLOR: BLACK

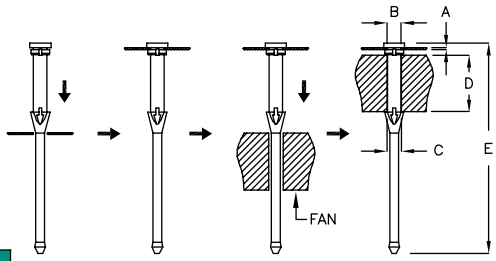

PART NO	A CHASSIS THICKNESS	B HOLE IN CHASSIS	C HOLE IN FAN	D FAN CHASSIS THICKNESS	E	PACKAGE
SRD-5H	0.8	ø4.2	ø4.2	20.0	69.3	500

返回图片索引

风扇铆钉 FAN SNAP RIVET 5-10-1

- MATERIAL: TPE
- COLOR: BLACK

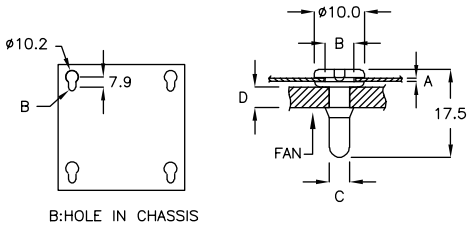

PART NO	A CHASSIS THICKNESS	B HOLE IN CHASSIS	C HOLE IN FAN	D FAN CHASSIS THICKNESS	PACKAGE
SR-15C	0.8	ø5.9	ø4.2	4.0	2000

风扇铆钉 FAN SNAP RIVET 5-10-2

- COLOR: BLACK

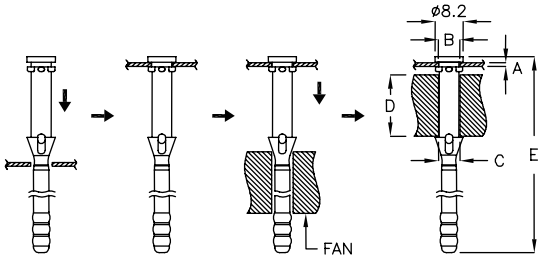

PART NO	MATERIAL	A CHASSIS THICKNESS	B HOLE IN CHASSIS	C HOLE IN FAN	D FAN CHASSIS THICKNESS	E	PACKAGE
SRD-4BN	SILICONE	1.0	ø4.3	ø4.3	10.0	41.5	1000
SRD-4KH	TPE	1.0	ø4.3	ø4.3	15.0	46.5	

风扇铆钉 FAN SNAP RIVET 5-10-3

- MATERIAL: SILICONE
- COLOR: BLACK

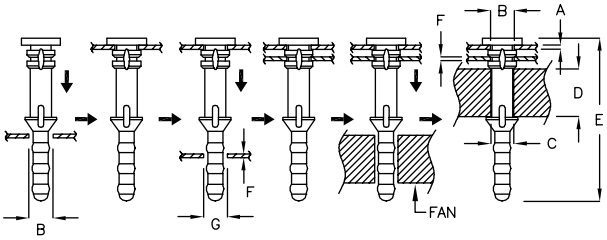

PART NO	A CHASSIS THICKNESS	B HOLE IN CHASSIS	C HOLE IN FAN	D FAN CHASSIS THICKNESS	E	F CHASSIS THICKNESS	G HOLE IN CHASSIS	PACKAGE
SRD-4D	1.0~1.2	ø4.3	ø4.3	38.0	81.2	0.8~1.0	ø4.3	500

风扇铆钉 FAN SNAP RIVET 5-10-4

- MATERIAL: TPE
- COLOR: BLACK

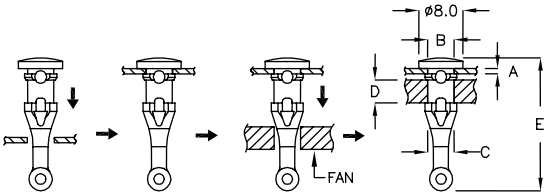

PART NO	A CHASSIS THICKNESS	B HOLE IN CHASSIS	C HOLE IN FAN	D FAN CHASSIS THICKNESS	E	PACKAGE
SR-22GS	1.0	ø4.3	ø4.3	4.0	23.2	2000

返回图片索引

风扇铆钉 FAN SNAP RIVET 5-11-1

- MATERIAL: SILICONE,TPE,TPR
- COLOR: BLACK

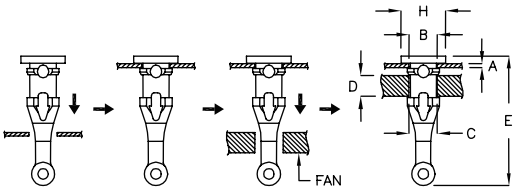

PART NO	MATERIAL	A CHASSIS THICKNESS	B HOLE IN CHASSIS	C HOLE IN FAN	D FAN CHASSIS THICKNESS	E	H	PACKAGE
SR-16Y	TPR	0.9	ø4.6	ø4.6	4.0	22.2	ø7.6	2000
SR-22A	TPE	1.0	ø4.5	ø4.5	4.0	22.2	ø7.6	
SR-22BL	TPE	1.0	ø4.5	ø4.5	4.0	22.8	ø7.6	1000
SR-22C	TPE	1.0	ø4.5	ø4.5	3.0	22.2	ø7.6	2000
SR-22D	TPE	0.8	ø4.5	ø4.5	4.0	22.2	ø7.6	
SR-22F	TPE	0.8	ø4.5	ø4.5	3.0	22.2	ø7.6	
SR-22H	SILICONE	1.0	ø4.3	ø4.3	4.0	22.2	ø7.6	
SR-22J	TPE	1.0	ø4.3	ø4.3	3.0	22.2	ø7.6	
SR-22K	TPE	0.8	ø4.3	ø4.3	4.0	22.0	ø7.6	
SR-22L	TPE	0.8	ø4.3	ø4.3	3.0	22.2	ø7.6	
SR-22MP	SILICONE	2.0	ø4.8	ø4.3	4.5	23.6	ø8.0	
SR-22XW	SILICONE	1.2	ø4.5	ø4.5	4.0	22.7	ø9.3	

风扇铆钉 FAN SNAP RIVET 5-11-2

- MATERIAL: TPE
- COLOR: BLACK

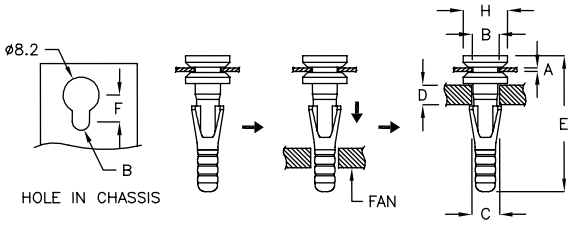

PART NO	A CHASSIS THICKNESS	B HOLE IN CHASSIS	C HOLE IN FAN	D FAN CHASSIS THICKNESS	E	F	H	PACKAGE
SRD-7AK	0.8	ø4.4	ø4.3	4.0	23.9	5.7	ø7.8	1000
SRD-21Y	1.0	ø4.5	ø4.5	4.0	22.6	6.2	ø8.0	2000
SRD-23C	1.0	ø4.5	ø4.5	4.8	23.3	6.2	ø8.0	1000
SRD-25GW	1.0	ø4.5	ø4.3	5.4	25.7	6.2	ø7.8	

风扇铆钉 FAN SNAP RIVET 5-11-3

- MATERIAL: TPE
- COLOR: BLACK

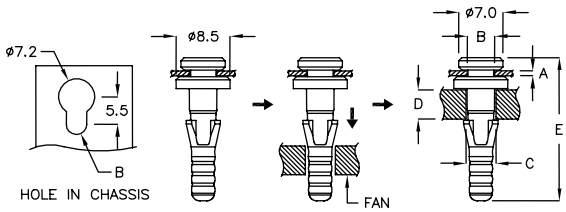

PART NO	A CHASSIS THICKNESS	B HOLE IN CHASSIS	C HOLE IN FAN	D FAN CHASSIS THICKNESS	E	PACKAGE
SRD-22MK	1.0	ø4.1	ø4.5	5.0	22.6	1000

风扇铆钉 FAN SNAP RIVET 5-12-1

- MATERIAL: TPE
- COLOR: BLACK

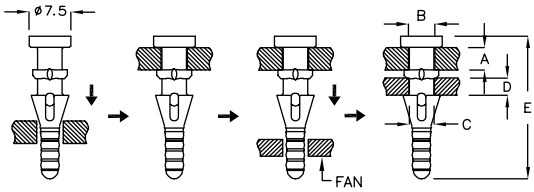

PART NO	A CHASSIS THICKNESS	B HOLE IN CHASSIS	C HOLE IN FAN	D FAN CHASSIS THICKNESS	E	PACKAGE
SRD-4NH	4.0	ø4.65	ø4.3	4.0	25.4	1000

风扇铆钉 FAN SNAP RIVET 5-12-2

- MATERIAL: SILICONE
- COLOR: BLACK

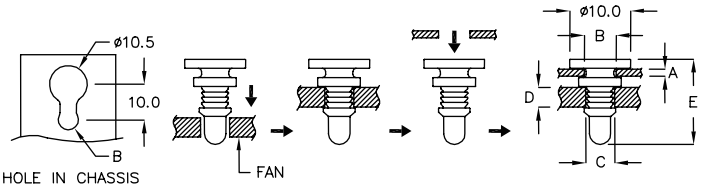

PART NO	A CHASSIS THICKNESS	B HOLE IN CHASSIS	C HOLE IN FAN	D FAN CHASSIS THICKNESS	E	PACKAGE
SRCM-5JG	1.3	ø5.6	ø4.3	4.0	13.85	2000
SRCM-5K	1.6	ø5.6	ø4.3	4.0	14.05	

风扇铆钉 FAN SNAP RIVET 5-12-3

- MATERIAL: SILICONE
- COLOR: BLACK

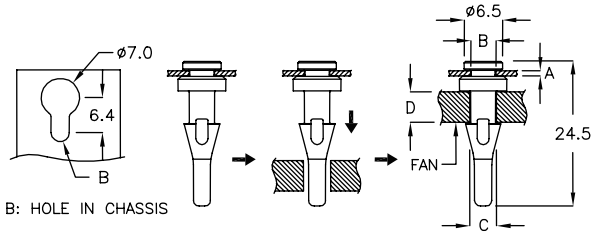

PART NO	A CHASSIS THICKNESS	B HOLE IN CHASSIS	C HOLE IN FAN	D FAN CHASSIS THICKNESS	PACKAGE
SRL-24JK	0.9	ø4.1	ø4.4	5.6	2000

风扇铆钉 FAN SNAP RIVET 5-12-4

- MATERIAL: TPE
- COLOR: BLACK

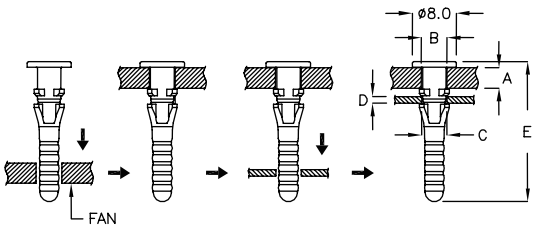

PART NO	A FAN CHASSIS THICKNESS	B HOLE IN FAN	C HOLE IN CHASSIS	D CHASSIS THICKNESS	E	PACKAGE
SRCK-4FA	4.0	ø4.4	ø4.4	1.5	25.4	2000

返回图片索引

风扇铆钉 FAN SNAP RIVET 5-13-1

- MATERIAL: TPR
- COLOR: BLACK

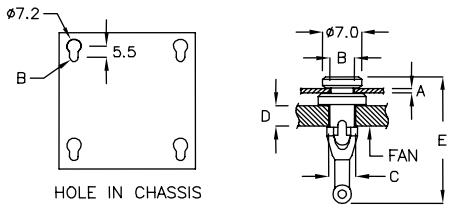

PART NO	A CHASSIS THICKNESS	B HOLE IN CHASSIS	C HOLE IN FAN	D FAN CHASSIS THICKNESS	E	PACKAGE
SR-26Y	1.0	ø4.1	ø4.5	4.0	22.6	1000

风扇铆钉 FAN SNAP RIVET 5-13-2

- MATERIAL: SILICONE
- COLOR: BLACK

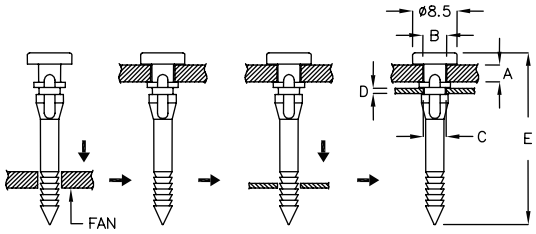

PART NO	A FAN CHASSIS THICKNESS	B HOLE IN FAN	C HOLE IN CHASSIS	D CHASSIS THICKNESS	E	PACKAGE
SRB-02	3.5	ø4.2	ø4.5	1.3	33.0	2000

风扇铆钉 FAN SNAP RIVET 5-13-3

- MATERIAL: TPR
- COLOR: BLACK

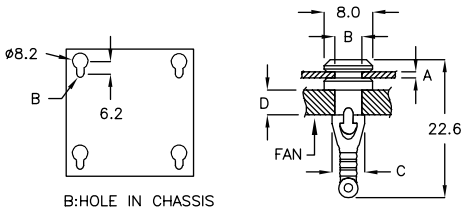

PART NO	A CHASSIS THICKNESS	B HOLE IN CHASSIS	C HOLE IN FAN	D FAN CHASSIS THICKNESS	PACKAGE
SR-21RK	1.0	ø4.5	ø4.5	4.0	2000

风扇铆钉 FAN SNAP RIVET 5-13-4

- MATERIAL: TPR
- COLOR: BLACK

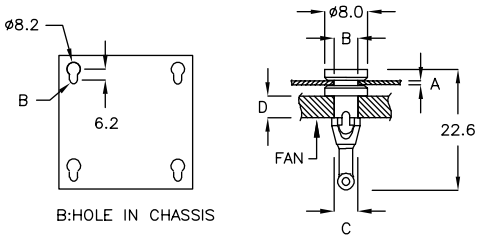

PART NO	A CHASSIS THICKNESS	B HOLE IN CHASSIS	C HOLE IN FAN	D FAN CHASSIS THICKNESS	PACKAGE
SR-21Y	1.0	ø4.5	ø4.5	4.0	2000

风扇铆钉 FAN SNAP RIVET 5-14-1

- MATERIAL: TPE
- COLOR: BLACK

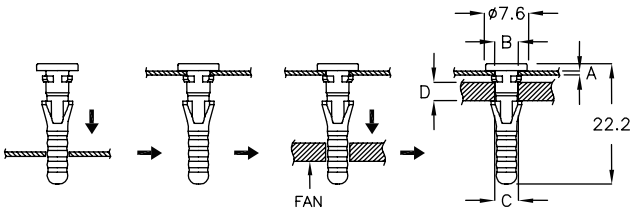

PART NO	A CHASSIS THICKNESS	B HOLE IN CHASSIS	C HOLE IN FAN	D FAN CHASSIS THICKNESS	PACKAGE
SRD-22AT	1.0	ø4.5	ø4.5	4.0	2000

风扇铆钉 FAN SNAP RIVET 5-14-2

- MATERIAL: TPE
- COLOR: BLACK

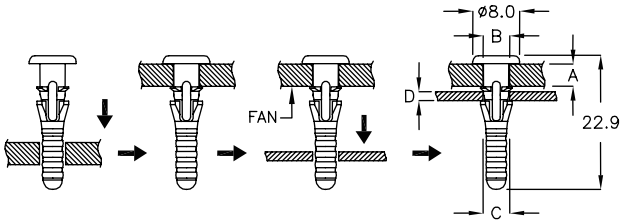

PART NO	A FAN THICKNESS	B HOLE IN FAN	C HOLE IN CHASSIS	D CHASSIS THICKNESS	PACKAGE
SRBK-4TK	4.0	ø4.5	ø4.5	2.0	2000

风扇铆钉 FAN SNAP RIVET 5-14-3

- MATERIAL: TPE
- COLOR: BLACK

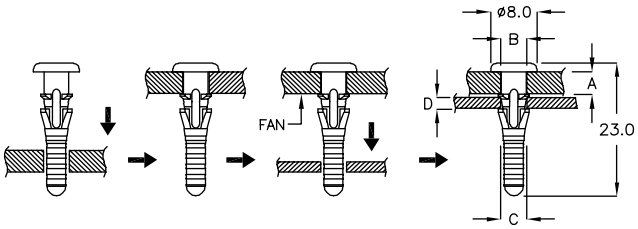

PART NO	A FAN THICKNESS	B HOLE IN FAN	C HOLE IN CHASSIS	D CHASSIS THICKNESS	PACKAGE
SRCK-4JL	4.0	ø4.5	ø4.5	2.0	2000

风扇铆钉 FAN SNAP RIVET 5-14-4

- MATERIAL: TPE
- COLOR: BLACK

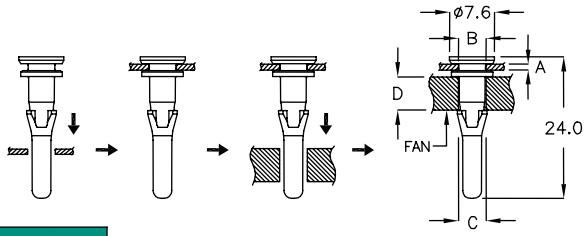

PART NO	A CHASSIS THICKNESS	B HOLE IN CHASSIS	C HOLE IN FAN	D FAN CHASSIS THICKNESS	PACKAGE
SRD-24D	1.0	ø4.5	ø4.5	6.0	2000

返回图片索引

风扇铆钉 FAN SNAP RIVET 5-15-1

- MATERIAL: SILICONE
- COLOR: BLACK

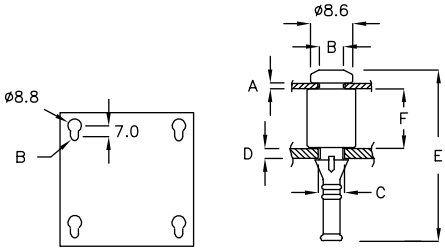

PART NO	A CHASSIS THICKNESS	B HOLE IN CHASSIS	C HOLE IN CHASSIS	D FAN CHASSIS THICKNESS	E	F	PACKAGE
SR-33Y	1.2	ø5.0	ø4.6	2.5	34.3	11.4	500
SR-36Y	1.2	ø5.0	ø4.6	2.5	34.9	12.0	

风扇铆钉 FAN SNAP RIVET 5-15-2

- MATERIAL: TPE
- COLOR: BLACK

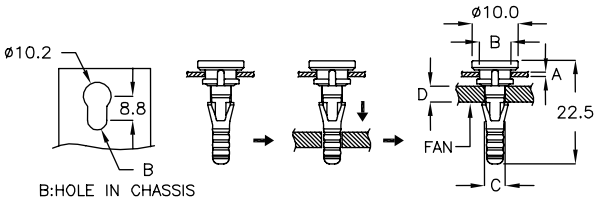

PART NO	A CHASSIS THICKNESS	B HOLE IN CHASSIS	C HOLE IN FAN	D FAN CHASSIS THICKNESS	PACKAGE
SRD-21SA	1.0	ø7.1	ø4.5	4.0	2000

风扇固定扣 FAN SNAP RIVET 5-15-3

- MATERIAL: NYLON 66(UL)
- FLAME CLASS: 94V-0/94V-2
- COLOR: BLACK

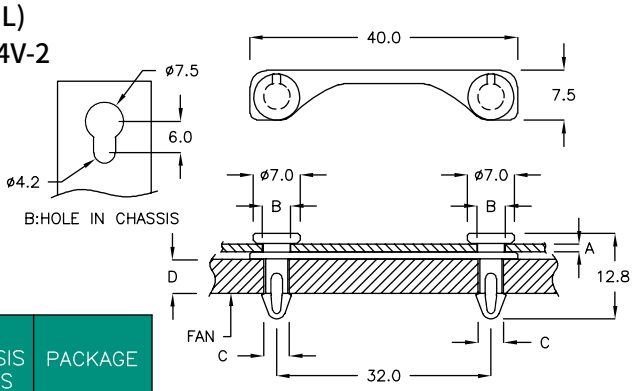

PART NO	A CHASSIS THICKNESS	B HOLE IN CHASSIS	C HOLE IN FAN	D FAN CHASSIS THICKNESS	PACKAGE
LHK-40	1.2	ø4.2	ø3.5	5.0	200

风扇固定扣 FAN SNAP RIVET 5-15-4

- MATERIAL: NYLON 66(UL)
- FLAME CLASS: 94V-0/94V-2
- COLOR: BLACK

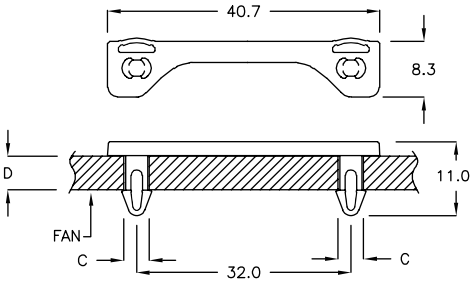

PART NO	C HOLE IN FAN	D FAN CHASSIS THICKNESS	PACKAGE
LHQ-40M	ø3.5	5.0	200

风扇固定扣 FAN SNAP RIVET 5-16-1

- MATERIAL: NYLON 66(UL)
- FLAME CLASS: 94V-0/94V-2
- COLOR: BLACK

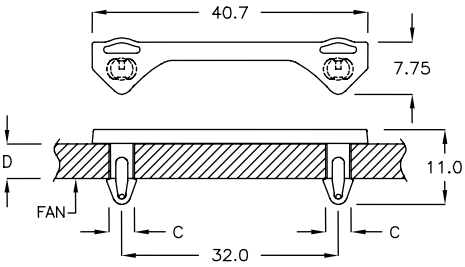

PART NO	C HOLE IN FAN	D FAN CHASSIS THICKNESS	PACKAGE
LHQ-40KP	ø3.5	5.0	200

铆钉 MOUNTING BUTTON 5-16-2

- MATERIAL: NYLON 66(UL)
- FLAME CLASS: 94V-0/94V-2
- COLOR: BLACK

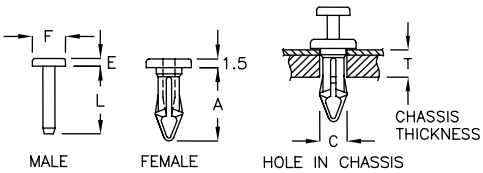

PART NO	A	C HOLE IN CHASSIS	E	F	L	T CHASSIS THICKNESS	PACKAGE
SR-02Y	8.9	ø3.1	1.3	ø3.2	7.65	2.5~3.2	2000
SR-03Y	10.0	ø3.2	1.0	ø3.1	9.0	4.2~4.5	
SR-4Y	12.1	ø4.3	1.3	ø5.5	11.2	5.6~6.4	
SR-06C	10.7	ø4.5	1.55	ø7.3	9.55	5.6~6.0	
SR-06Y	10.8	ø4.6	1.5	ø7.3	9.6	5.6~6.0	
SR-08Y	10.7	ø4.65	1.53	ø4.75	9.4	5.2~5.7	

尼龙铆钉 SNAP RIVET 5-16-3

- MATERIAL: NYLON 66(UL)
- FLAME CLASS: 94V-0/94V-2
- COLOR: BLACK

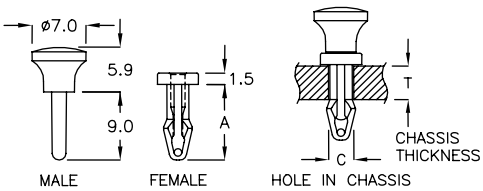

PART NO	A	C HOLE IN CHASSIS	T CHASSIS THICKNESS	PACKAGE
SRXM-3Y	10.0	ø3.0	4.8	2000

返回图片索引

尼龙铆钉 FAN SNAP RIVET 5-17-1

- MALE MATERIAL: NYLON 66(UL)
- FLAME CLASS: 94V-0/94V-2
- FEMALE MATERIAL: TPE
- COLOR: BLACK

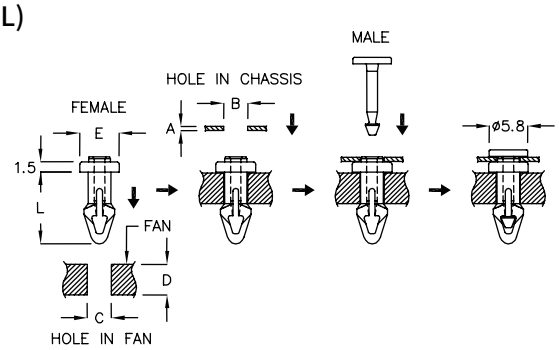

PART NO	A CHASSIS THICKNESS	B HOLE IN CHASSIS	C HOLE IN FAN	D FAN CHASSIS THICKNESS	E	L	PACKAGE
SQR-3KM	0.8	ø3.5	ø3.5	4.0	ø6.8	9.95	2000
SQR-3GF	1.0	ø3.5	ø3.5	4.0	ø6.8	9.95	
SQR-3AK	0.8	ø3.5	ø3.5	5.0	ø6.0	10.85	
SQR-3DP	1.0	ø3.5	ø3.5	5.0	ø6.0	10.85	

风扇固定扣 FAN SNAP RIVET 5-17-2

- MALE MATERIAL: NYLON 66(UL)
- FLAME CLASS: 94V-0/94V-2
- FEMALE MATERIAL: TPE
- COLOR: BLACK

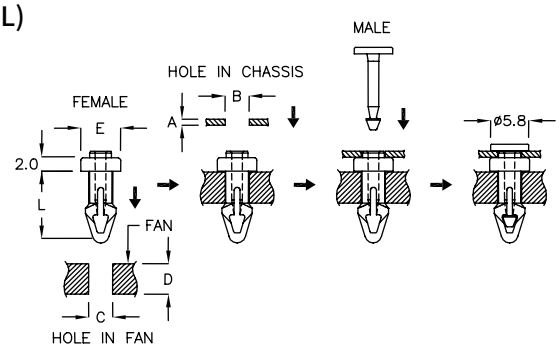

PART NO	A CHASSIS THICKNESS	B HOLE IN CHASSIS	C HOLE IN FAN	D FAN CHASSIS THICKNESS	E	L	PACKAGE
SQRC-3TC	1.0	ø3.5	ø3.5	5.0	ø6.0	10.85	2000

风扇铆钉 FAN SNAP RIVET 5-17-3

- MALE MATERIAL: NYLON 66(UL)
- FLAME CLASS: 94V-0/94V-2
- FEMALE MATERIAL: TPE
- COLOR: BLACK

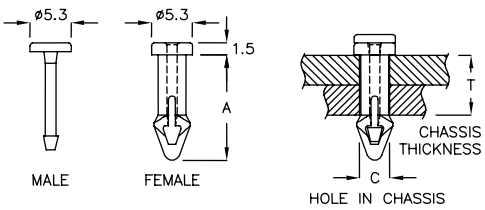

PART NO	A	C HOLE IN CHASSIS	T CHASSIS THICKNESS	PACKAGE
SR-14Y	13.6	ø3.6	8.1~8.3	2000

风扇铆钉 FAN SNAP RIVET 5-18-1

- MALE MATERIAL: NYLON 66(UL)
- FLAME CLASS: 94V-0/94V-2
- FEMALE MATERIAL: PU
- COLOR: BLACK

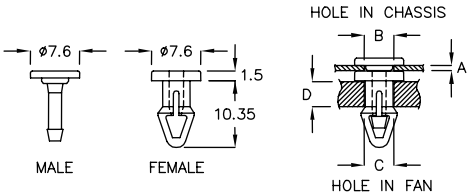

PART NO	A CHASSIS THICKNESS	B HOLE IN CHASSIS	C HOLE IN FAN	D FAN CHASSIS THICKNESS	PACKAGE
SR-11Y	0.8	ø4.6	ø4.45	4.3~4.5	2000
SR-12Y	0.8	ø4.6	ø4.45	4.5~5.7	
SR-45Y	0.8	ø4.6	ø4.3	3.0	

风扇铆钉 FAN SNAP RIVET 5-18-2

- MALE MATERIAL: NYLON 66(UL)
- FLAME CLASS: 94V-0/94V-2
- FEMALE MATERIAL: TPE
- COLOR: BLACK

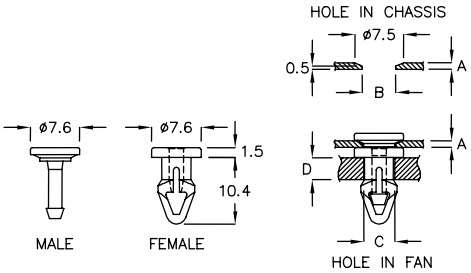

PART NO	A CHASSIS THICKNESS	B HOLE IN CHASSIS	C HOLE IN FAN	D FAN CHASSIS THICKNESS	PACKAGE
SR-13Y	1.0	ø5.15	ø4.45	4.0~4.2	2000

风扇铆钉 FAN SNAP RIVET 5-18-3

- MALE MATERIAL: NYLON 66(UL)
- FLAME CLASS: 94V-0/94V-2
- FEMALE MATERIAL: TPE
- COLOR: BLACK

NEW

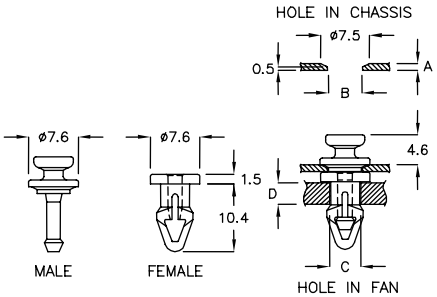

	PART NO	A CHASSIS THICKNESS	B HOLE IN CHASSIS	C HOLE IN FAN	D FAN CHASSIS THICKNESS	PACKAGE
★	SR-13YH	1.0	ø5.15	ø4.45	4.0~4.2	2000

风扇铆钉 FAN SNAP RIVET 5-18-4

- MALE MATERIAL: NYLON 66(UL)
- FLAME CLASS: 94V-0/94V-2
- FEMALE MATERIAL: TPE
- COLOR: BLACK

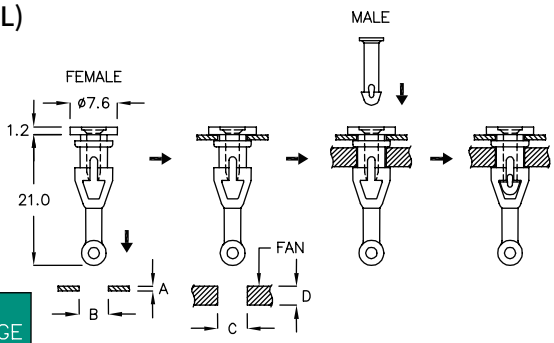

PART NO	A CHASSIS THICKNESS	B HOLE IN CHASSIS	C HOLE IN FAN	D FAN CHASSIS THICKNESS	PACKAGE
SR-15Y	1.0	ø4.6	ø4.6	3.8~4.0	2000

返回图片索引

风扇铆钉 FAN SNAP RIVET 5-19-1

- MALE MATERIAL: NYLON 66(UL)
- FLAME CLASS: 94V-0/94V-2
- FEMALE MATERIAL: TPE
- COLOR: BLACK

NEW

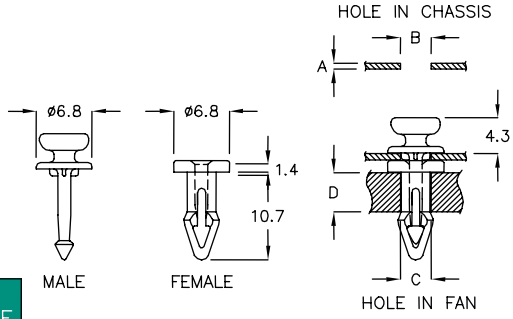

	PART NO	A CHASSIS THICKNESS	B HOLE IN CHASSIS	C HOLE IN FAN	D FAN CHASSIS THICKNESS	PACKAGE
★	SR-51Y	0.8	ø3.6	ø3.5	5.0	2000

风扇铆钉 FAN SNAP RIVET 5-19-2

- MALE MATERIAL: NYLON 66(UL)
- FLAME CLASS: 94V-0/94V-2
- FEMALE MATERIAL: TPE
- COLOR: BLACK

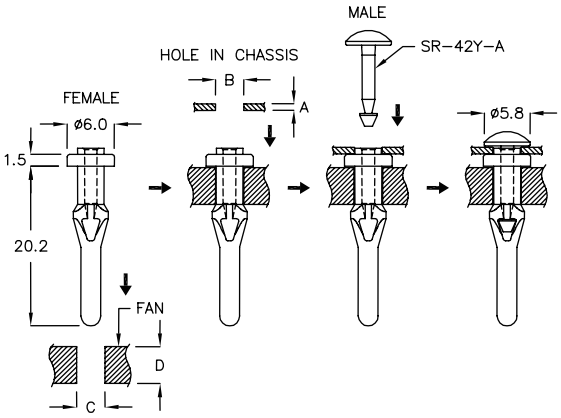

PART NO	A CHASSIS THICKNESS	B HOLE IN CHASSIS	C HOLE IN FAN	D FAN CHASSIS THICKNESS	PACKAGE
SRNT-3FY	0.8~1.0	ø3.5	ø3.5	5.0	2000

风扇铆钉 FAN SNAP RIVET 5-19-3

- MALE MATERIAL: NYLON 66(UL)
- FLAME CLASS: 94V-0/94V-2
- FEMALE MATERIAL: TPE
- COLOR: BLACK

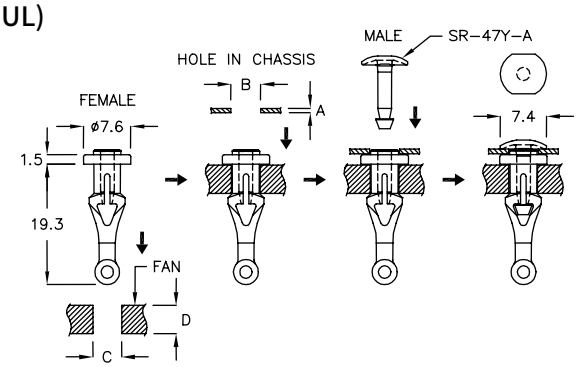

PART NO	A CHASSIS THICKNESS	B HOLE IN CHASSIS	C HOLE IN FAN	D FAN CHASSIS THICKNESS	PACKAGE
SRN-4YB	0.8	ø4.5	ø4.3	4.8~5.0	1000

风扇铆钉 FAN SNAP RIVET 5-20-1

- MALE MATERIAL: NYLON 66(UL)
- FLAME CLASS: 94V-0/94V-2
- FEMALE MATERIAL: TPE
- COLOR: BLACK

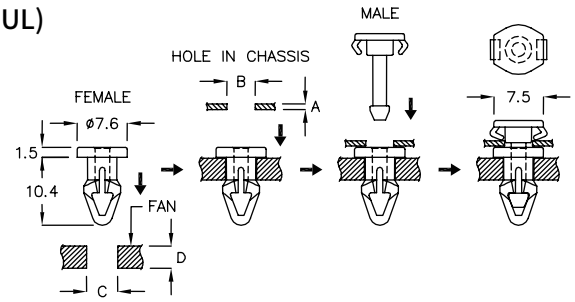

PART NO	A CHASSIS THICKNESS	B HOLE IN CHASSIS	C HOLE IN FAN	D FAN CHASSIS THICKNESS	PACKAGE
SR-19Y	0.8	ø4.1	ø4.45	4.0~4.2	2000

风扇铆钉 FAN SNAP RIVET 5-20-2

- MALE MATERIAL: NYLON 66(UL)
- FLAME CLASS: 94V-0/94V-2
- FEMALE MATERIAL: TPE
- COLOR: BLACK

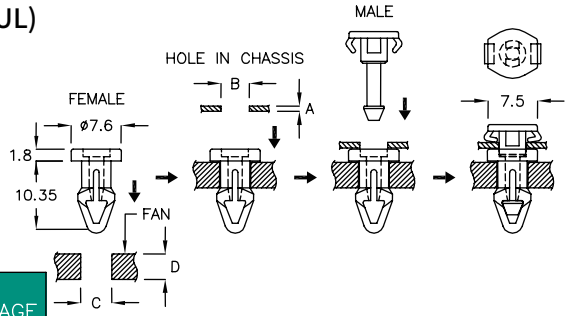

PART NO	A CHASSIS THICKNESS	B HOLE IN CHASSIS	C HOLE IN FAN	D FAN CHASSIS THICKNESS	PACKAGE
SR-23Y	1.2	ø4.1	ø4.45	4.0~4.2	2000
SR-24Y	0.8	ø4.1	ø4.45	4.0~4.2	

风扇铆钉 FAN SNAP RIVET 5-20-3

- MALE MATERIAL: NYLON 66(UL)
- FLAME CLASS: 94V-0/94V-2
- FEMALE MATERIAL: TPE
- COLOR: BLACK

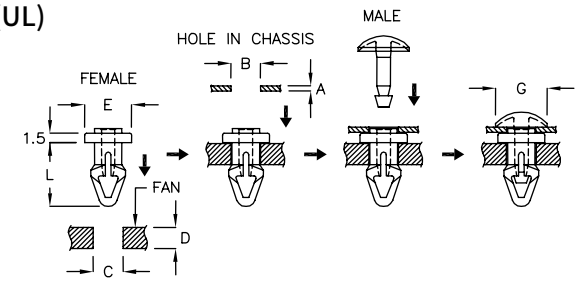

PART NO	A CHASSIS THICKNESS	B HOLE IN CHASSIS	C HOLE IN FAN	D FAN CHASSIS THICKNESS	E	G	L	PACKAGE
SR-38Y	0.8~1.2	ø4.5	ø4.45	4.0	ø7.6	ø8.3	10.35	2000
SR-42Y	0.8~1.0	ø3.5	ø3.5	5.0	ø6.0	ø5.8	11.3	

风扇铆钉 FAN SNAP RIVET 5-20-4

- MALE MATERIAL: NYLON 66(UL)
- FLAME CLASS: 94V-0/94V-2
- FEMALE MATERIAL: TPE
- COLOR: BLACK

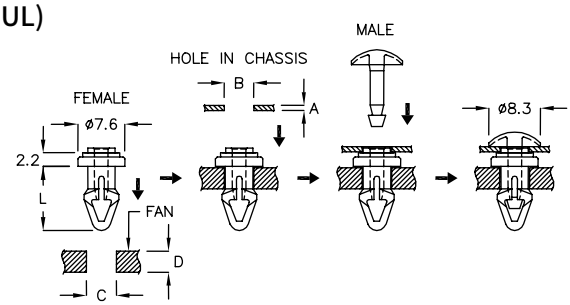

PART NO	A CHASSIS THICKNESS	B HOLE IN CHASSIS	C HOLE IN FAN	D FAN CHASSIS THICKNESS	L	PACKAGE
SR-39Y	0.8~1.2	ø4.5	ø4.45	4.0	10.35	2000
SR-43Y	0.8~1.2	ø4.5	ø4.3	3.5	9.95	

返回图片索引

风扇铆钉 FAN SNAP RIVET 5-21-1

- MALE MATERIAL: NYLON 66(UL)
- FLAME CLASS: 94V-0/94V-2
- FEMALE MATERIAL: TPE
- COLOR: BLACK

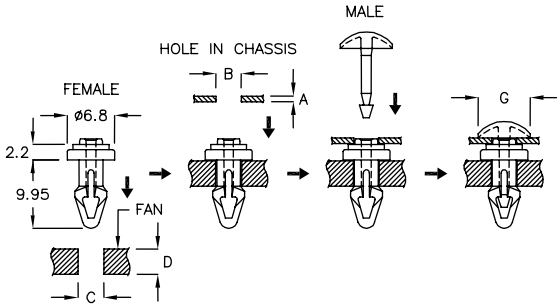

PART NO	A CHASSIS THICKNESS	B HOLE IN CHASSIS	C HOLE IN FAN	D FAN CHASSIS THICKNESS	G	PACKAGE
SR-44Y	0.8	ø3.5	ø3.5	4.0	ø7.5	2000
SR-48Y	1.0	ø3.5	ø3.5	4.0	ø5.8	

风扇铆钉 FAN SNAP RIVET 5-21-2

- MALE MATERIAL: NYLON 66(UL)
- FLAME CLASS: 94V-0/94V-2
- FEMALE MATERIAL: TPE
- COLOR: BLACK

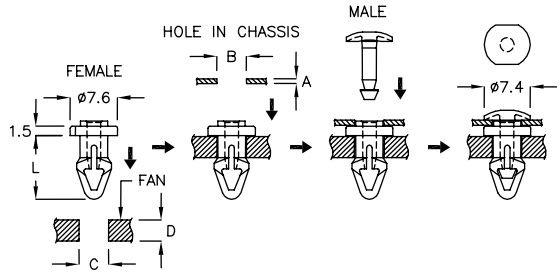

PART NO	A CHASSIS THICKNESS	B HOLE IN CHASSIS	C HOLE IN FAN	D FAN CHASSIS THICKNESS	L	PACKAGE
SR-46Y	1.0~1.2	ø4.5	ø4.45	4.0	10.35	2000
SR-47Y	0.8	ø4.5	ø4.3	5.0	11.35	

风扇铆钉 SNAP RIVET 5-21-3

- MATERIAL: NYLON 66(UL)
- FLAME CLASS: 94V-0/94V-2
- COLOR: BLACK

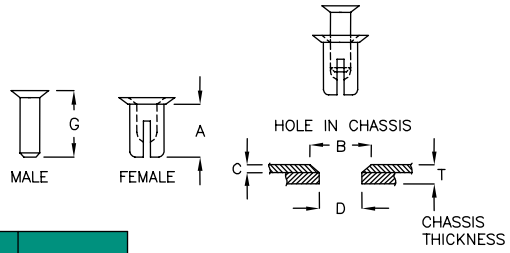

PART NO	A	B HOLE IN CHASSIS	C CHASSIS THICKNESS	D HOLE IN CHASSIS	G	T CHASSIS THICKNESS	PACKAGE
SR-3P	8.0	ø6.5	1.25	ø3.0	8.65	5.1~5.3	2000
SR-3RY	3.0	ø5.9	0.8	ø3.4	3.7	2.7~2.95	
SR-4B	6.35	ø6.5	0.7	ø4.0	7.8	3.5~3.9	
SR-4CA	6.2	ø6.5	0.8	ø4.0	7.5	3.5~4.9	
SR-4P	8.5	ø6.5	0.8	ø4.0	9.85	4.3~5.6	
SR-4PF	7.25	ø5.8	0.9	ø4.0	9.3	5.7~6.0	
SR-4PL	10.4	ø6.5	0.8	ø4.0	12.8	6.8~8.8	
SR-4PJ	15.0	ø6.5	1.5	ø3.9	17.45	12.0~13.0	

返回图片索引

尼龙铆钉 SNAP RIVET 5-22-1

- MATERIAL: NYLON 66(UL)
- FLAME CLASS: 94V-0/94V-2
- COLOR: BLACK

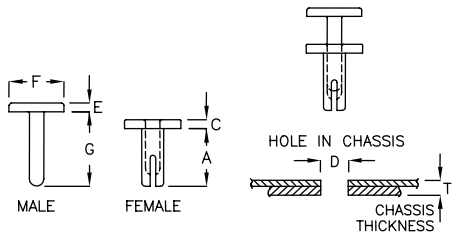

PART NO	A	C	D HOLE IN CHASSIS	E	F	G	T CHASSIS THICKNESS	PACKAGE
SR-2MC	3.2	0.6	ø2.0	0.5	ø3.5	4.0	1.3~2.0	2000
SR-2QH	4.0	0.8	ø2.0	0.5	ø3.5	4.85	2.0~3.0	
SR-2TK	5.0	0.8	ø2.0	0.75	ø4.8	6.5	2.8~3.5	

尼龙铆钉 SNAP RIVET 5-22-2

- MATERIAL: NYLON 66(UL)
- FLAME CLASS: 94V-0/94V-2
- COLOR: BLACK

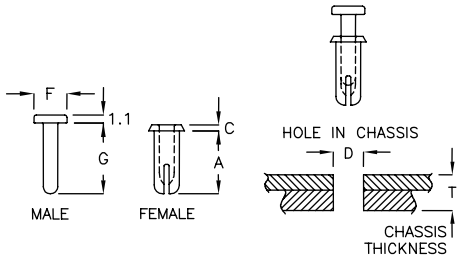

PART NO	A	C	D HOLE IN CHASSIS	F	G	T CHASSIS THICKNESS	PACKAGE
SR-3DM	8.6	0.8	ø3.5	ø4.5	9.65	5.5~6.5	2000
SR-4LM	11.3	0.9	ø4.5	ø5.8	13.4	8.0~9.0	

尼龙铆钉 SNAP RIVET 5-22-3

- MATERIAL: NYLON 66(UL)
- FLAME CLASS: 94V-0/94V-2
- COLOR: BLACK

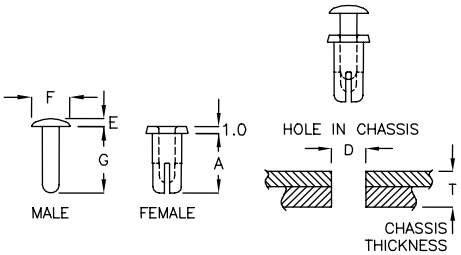

PART NO	A	D HOLE IN CHASSIS	E	F	G	T CHASSIS THICKNESS	PACKAGE
SR-4DR	9.0	ø4.5	1.2	ø5.8	10.5	5.2~6.0	2000

尼龙铆钉 SNAP RIVET 5-22-4

- MATERIAL: NYLON 66(UL)
- FLAME CLASS: 94V-0/94V-2
- COLOR: BLACK

NEW

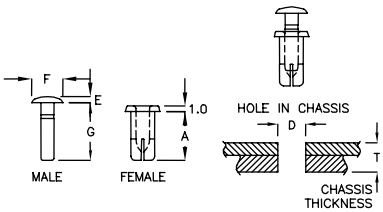

	PART NO	A	D HOLE IN CHASSIS	E	F	G	T CHASSIS THICKNESS	PACKAGE
★	SR-4DX	9.0	ø4.5	1.15	ø5.7	10.6	5.2	2000

返回图片索引

尼龙铆钉 SNAP RIVET 5-23-1

- MATERIAL: NYLON 66(UL)
- FLAME CLASS: 94V-0/94V-2
- COLOR: BLACK

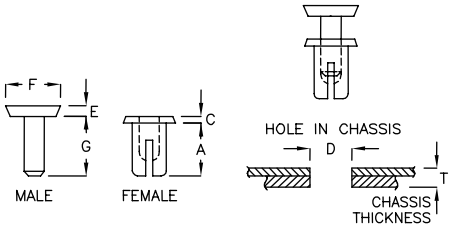

PART NO	A	C	D HOLE IN CHASSIS	E	F	G	T CHASSIS THICKNESS	PACKAGE
SR-3XK	7.5	0.8	ø3.0	1.3	ø5.5	8.3	3.5~4.6	2000
SR-3T	7.5	0.8	ø3.0	1.25	ø6.9	9.4	3.5~4.6	
SR-3TW	11.7	1.0	ø3.1	1.2	ø5.5	12.7	8.7~9.7	
SR-4T	8.0	1.0	ø4.0	1.3	ø7.0	11.0	3.7~5.2	
SR-4YT	8.3	1.0	ø4.3	1.7	ø5.5	11.3	4.0~6.0	
SR-4K	8.3	1.0	ø4.3	1.5	ø7.9	11.4	4.0~6.0	
SR-4LQ	10.5	0.9	ø4.5	1.25	ø5.85	12.3	6.0~7.2	

尼龙铆钉 SNAP RIVET 5-23-2

- MATERIAL: NYLON 66(UL)
- FLAME CLASS: 94V-0/94V-2
- COLOR: BLACK

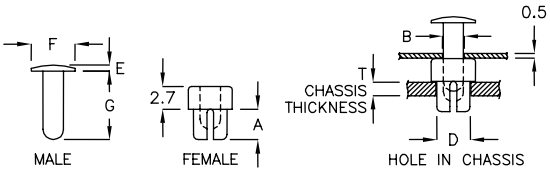

PART NO	A	B HOLE IN CHASSIS	D HOLE IN CHASSIS	E	F	G	T CHASSIS THICKNESS	PACKAGE
SR-4FH	3.6	ø2.6	ø4.0	0.7	ø5.2	7.9	1.6	2000

尼龙铆钉 SNAP RIVET 5-23-3

- MATERIAL: NYLON 66(UL)
- FLAME CLASS: 94V-0/94V-2
- COLOR: BLACK

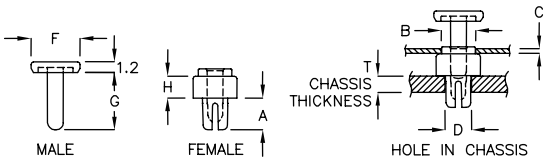

PART NO	A	B HOLE IN CHASSIS	C CHASSIS THICKNESS	D HOLE IN CHASSIS	F	G	H	T CHASSIS THICKNESS	PACKAGE
SRMR-2H	3.6	ø3.0	0.25	ø2.0	ø4.6	6.4	2.5	1.6	2000
SRMR-2CF	3.0	ø3.0	0.6~0.8	ø2.0	ø4.6	6.4	2.5	1.6	
SRMR-3D	3.6	ø4.0	0.4	ø3.0	ø5.6	6.5	2.5	1.6	
SRMR-3SC	3.6	ø4.0	1.6	ø3.0	ø5.6	10.2	5.0	1.6	

尼龙铆钉 SNAP RIVET 5-23-4

- MATERIAL: NYLON 66(UL)
- FLAME CLASS: 94V-0/94V-2
- COLOR: BLACK

NEW

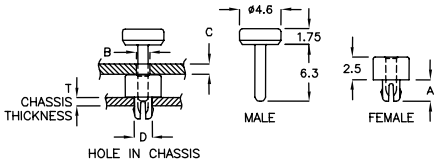

	PART NO	A	B HOLE IN CHASSIS	C CHASSIS THICKNESS	D HOLE IN CHASSIS	T CHASSIS THICKNESS	PACKAGE
★	SRMS-2N	2.4	ø1.5	1.2	ø2.0	0.9~1.0	2000

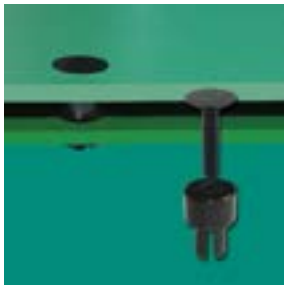

尼龙铆钉 SNAP RIVET 5-24-1

- MATERIAL: NYLON 66(UL)
- FLAME CLASS: 94V-0/94V-2
- COLOR: BLACK

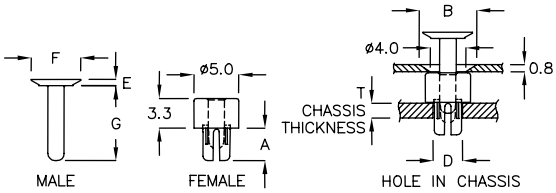

PART NO	A	B HOLE IN CHASSIS	D HOLE IN CHASSIS	E	F	G	T CHASSIS THICKNESS	PACKAGE
SRMT-3C	3.6	ø6.4	ø3.18	0.7	ø5.5	8.3	1.6	2000

尼龙铆钉 SNAP RIVET 5-24-2

- MATERIAL: NYLON 66(UL)
- FLAME CLASS: 94V-0/94V-2
- COLOR: BLACK

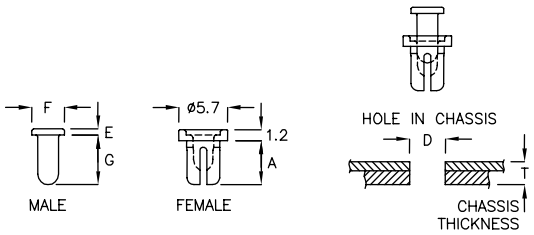

PART NO	A	D HOLE IN CHASSIS	E	F	G	T CHASSIS THICKNESS	PACKAGE
SRMF-4C	5.0	ø4.0	0.7	ø3.8	5.6	2.6	2000

尼龙铆钉 SNAP RIVET 5-24-3

- MATERIAL: NYLON 66(UL)
- FLAME CLASS: 94V-0/94V-2
- COLOR: BLACK

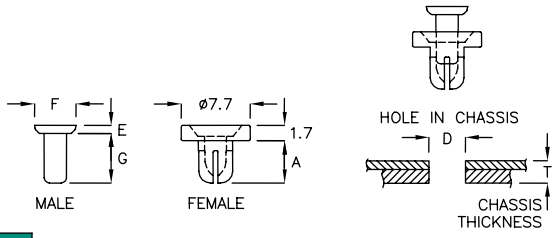

PART NO	A	D HOLE IN CHASSIS	E	F	G	T CHASSIS THICKNESS	PACKAGE
SR-4XT	4.7	ø4.0	0.9	ø4.65	5.5	1.8~2.5	2000

尼龙铆钉 SNAP RIVET 5-24-4

- MATERIAL: NYLON 66(UL)
- FLAME CLASS: 94V-0/94V-2
- COLOR: NATURAL

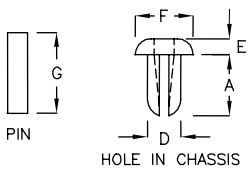

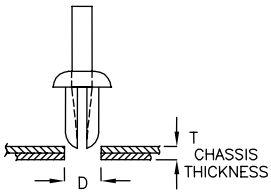

PART NO	A	D HOLE IN CHASSIS	E	F	G	T CHASSIS THICKNESS	PACKAGE
MAA-3C	5.8	ø3.2	1.5	ø5.55	7.7	2.5~3.0	2000
MAA-4C	13.7	ø4.7	2.75	ø8.15	16.0	8.4~9.0	

返回图片索引

尼龙铆钉 SNAP RIVET 5-25-1

- MATERIAL: NYLON 66(UL)
- FLAME CLASS: 94V-0/94V-2
- COLOR: NATURAL

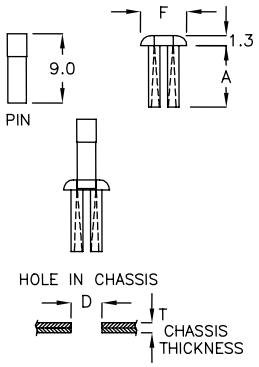

PART NO	A	D HOLE IN CHASSIS	F	T CHASSIS THICKNESS	PACKAGE
MAB-3A	8.0	ø4.0	ø6.0	0.8~1.2	2000

铆钉 SNAP RIVET 5-25-2

- MATERIAL: POM
- COLOR: NATURAL

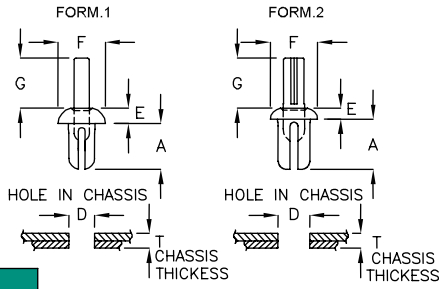

PART NO	A	D HOLE IN CHASSIS	E	F	G	T CHASSIS THICKNESS	FORM	PACKAGE
SRX-3DF	7.0	ø3.0	2.0	ø5.6	8.8	2.0~3.0	1	2000
SRX-3A	7.05	ø3.6	2.0	ø6.2	8.8	2.0~5.0	1	
SRX-4P	7.0	ø4.0	2.0	ø6.6	8.8	2.0~5.0	1	
SRX-5M	7.1	ø5.0	2.0	ø7.6	8.8	2.0~5.0	2	
SRX-6K	7.1	ø6.0	2.0	ø8.6	8.8	2.0~5.0	2	

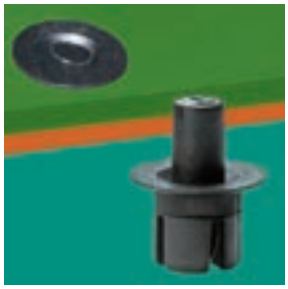

铆钉 SNAP RIVET 5-25-3

- MATERIAL: NYLON 66(UL)
- FLAME CLASS: 94V-0/94V-2
- COLOR: BLACK

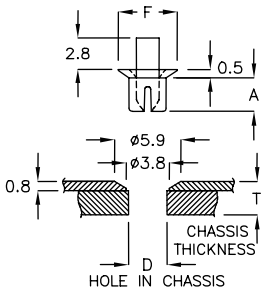

PART NO	A	D HOLE IN CHASSIS	F	T CHASSIS THICKNESS	PACKAGE
SRXD-3A	3.0	ø3.4	ø5.2	2.95	2000

尼龙铆钉 SNAP RIVET 5-25-4

- MATERIAL: NYLON 66(UL)
- FLAME CLASS: 94V-0/94V-2
- COLOR: BLACK

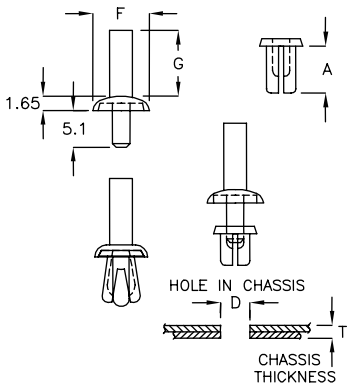

PART NO	A	D HOLE IN CHASSIS	F	G	T CHASSIS THICKNESS	PACKAGE
SR-3FK	3.5	ø3.5	ø8.0	10.0	1.0~1.5	2000

返回图片索引

尼龙铆钉 SNAP RIVET 5-26-1

- MATERIAL: NYLON 66(UL)
- FLAME CLASS: 94V-0/94V-2
- COLOR: BLACK

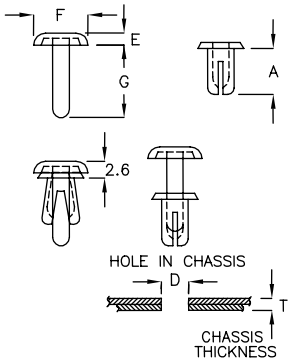

PART NO	A	D HOLE IN CHASSIS	E	F	G	T CHASSIS THICKNESS	PACKAGE
SR-4RK	7.0	ø4.0	1.8	ø8.2	11.0	4.5~5.4	2000

尼龙铆钉 SNAP RIVET 5-26-2

- MATERIAL: NYLON 66(UL)
- FLAME CLASS: 94V-0/94V-2
- COLOR: BLACK

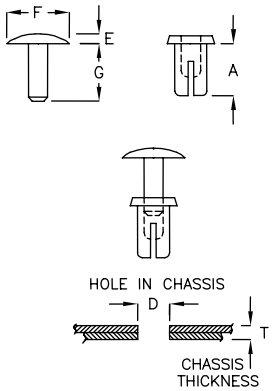

PART NO	A	D HOLE IN CHASSIS	E	F	G	T CHASSIS THICKNESS	PACKAGE
SR-04C	8.0	ø4.2	0.75	ø7.0	10.75	3.8~5.6	2000
SR-4CK	8.0	ø4.05	1.0	ø7.0	11.0	2.4~5.9	
SR-4LC	12.4	ø4.0	0.9	ø5.4	14.7	7.5~8.5	

尼龙铆钉 SNAP RIVET 5-26-3

- MALE MATERIAL: PC(UL)
- FLAME CLASS: 94V-2
- COLOR: WHITE
- FEMALE MATERIAL: NYLON 66(UL)
- FLAME CLASS: 94V-0/94V-2
- COLOR: NATURAL

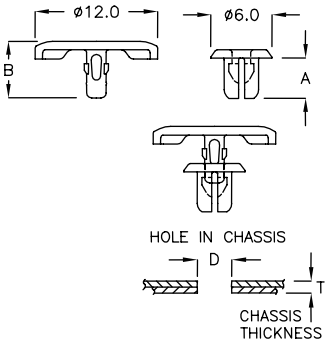

PART NO	A	B	D HOLE IN CHASSIS	T CHASSIS THICKNESS	PACKAGE
SRMQ-3BW	4.0	5.6	ø3.5	1.9~2.3	1000

返回图片索引

铆钉 SNAP RIVET 5-27-1

- SR-3SP MALE COLOR: WHITE
- SR-3SP FEMALE COLOR: NATURAL
- SR-3PF COLOR: BLACK

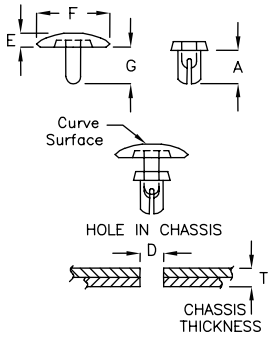

PART NO	MATERIAL		A	D HOLE IN CHASSIS	E	F	G	T CHASSIS THICKNESS	PACKAGE
SR-3SP	MALE	PC V0	4.3	ø3.0	1.75	ø9.4	4.7	1.2~2.0	2000
	FEMALE	N66 V0							
SR-3PF	N66 V2		3.65	ø3.2	1.6	ø8.5	5.0	1.5~1.8	

尼龙铆钉 SNAP RIVET 5-27-2

- MALE MATERIAL: PC(UL)
- FLAME CLASS: 94V-2
- COLOR: WHITE
- FEMALE MATERIAL: NYLON 66(UL)
- FLAME CLASS: 94V-0/94V-2
- COLOR: NATURAL

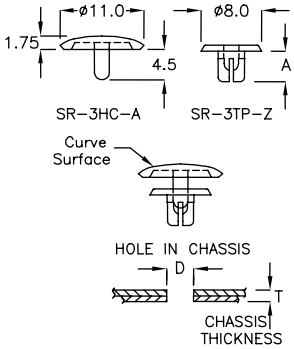

PART NO	A	D HOLE IN CHASSIS	T CHASSIS THICKNESS	PACKAGE
SR-3HC-A	4.0	ø3.5	1.9~2.3	2000
SR-3TP-Z				

尼龙铆钉 SNAP RIVET 5-27-3

- MALE MATERIAL: PC(UL)
- FLAME CLASS: 94V-2
- COLOR: WHITE
- FEMALE MATERIAL: NYLON 66(UL)
- FLAME CLASS: 94V-0/94V-2
- COLOR: NATURAL

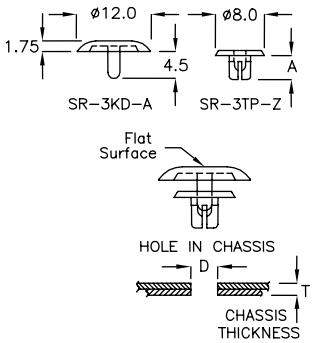

PART NO	A	D HOLE IN CHASSIS	T CHASSIS THICKNESS	PACKAGE
SR-3KD-A	4.0	ø3.5	1.9~2.3	2000
SR-3TP-Z				

尼龙铆钉 SNAP RIVET 5-28-1

- MATERIAL: NYLON 66(UL)
- MATERIAL: NYLON 46(UL)
- FLAME CLASS: 94V-0/94V-2
- COLOR: BLACK

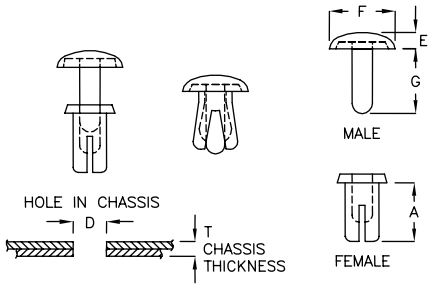

PART NO	A	D HOLE IN CHASSIS	T CHASSIS THICKNESS	E	F	G	MATERIAL	PACKAGE
SR-1FM	3.5	ø1.5	2.0~2.5	1.2	ø4.0	3.3	N66	2000
SR-2CW	3.3	ø1.9	1.6~2.0	1.2	ø4.3	3.6		
SR-2XC	3.25	ø2.0	1.0~1.7	1.2	ø4.3	4.2		
SR-2	3.3	ø2.0	1.0~1.7	1.2	ø4.3	4.2		
SR-2AF	3.6	ø2.0	1.5~2.0	1.2	ø4.3	3.6		
SR-2BT	4.0	ø2.0	1.8~2.5	1.2	ø4.3	4.5		
SR-2DS	4.5	ø2.0	2.2~3.0	1.2	ø4.3	5.0		
SR-2FR	5.5	ø2.0	2.5~3.5	1.2	ø4.3	5.8		
SR-2K	6.1	ø2.0	3.5~4.5	1.2	ø4.3	6.2		
SR-2F	2.8	ø2.1	0.6~1.2	1.2	ø4.3	3.6		
SR-2H	4.4	ø2.1	1.7~2.8	1.2	ø4.3	5.2		
SR-2J	5.2	ø2.1	2.8~3.6	1.2	ø4.3	6.5		
SR-2RC	4.7	ø2.2	2.8~3.3	1.2	ø4.3	5.5		
SR-2GQ	3.5	ø2.5	0.5~1.0	1.5	ø5.0	3.5		
SR-2HY	4.0	ø2.5	0.8~1.6	1.5	ø5.0	4.3		
SR-2.5S	4.5	ø2.5	0.8~2.5	1.5	ø5.0	4.5		
SR-2JB	5.0	ø2.5	2.0~3.0	1.5	ø5.0	5.5		
SR-2KY	5.5	ø2.5	2.5~3.5	1.5	ø5.0	6.0		
SR-2NT	6.0	ø2.5	3.0~4.0	1.5	ø5.0	6.5		
SR-2GF	4.2	ø2.6	2.0~3.0	1.45	ø5.0	4.75		
SR-2.5	4.4	ø2.6	2.0~2.8	1.5	ø5.0	4.5		
SR-2PD	4.8	ø2.6	2.5~3.4	1.4	ø5.0	4.85		
SR-2.7F	3.6	ø2.7	1.0~2.0	1.5	ø5.0	4.0		
SR-2.7H	5.2	ø2.7	2.7~3.6	1.5	ø5.0	5.6		
SR-2.7J	5.9	ø2.7	3.4~4.3	1.5	ø5.0	6.3		
SR-3AQ	3.5	ø3.0	0.8~1.5	1.65	ø6.2	3.8		
SR-3YK	3.65	ø3.0	1.0~2.0	1.65	ø6.2	5.0		
SR-3S	3.9	ø3.05	1.2~2.2	1.8	ø6.4	5.5		
SR-3GC	4.5	ø3.0	1.0~2.0	1.8	ø6.0	5.5		
SR-3HG	4.5	ø3.0	2.0~3.0	1.6	ø6.4	6.1	N46	
SR-3TY	4.5	ø3.0	2.0~3.0	1.65	ø6.2	6.25	N66	
SR-3MK	5.5	ø3.0	2.0~3.0	1.6	ø6.3	7.05		
SR-3MC	5.5	ø3.0	2.5~3.3	1.6	ø6.3	6.2		
SR-3JW	5.6	ø3.0	3.0~4.0	1.55	ø6.2	6.2		
SR-3M	5.7	ø3.0	2.2~3.5	1.8	ø6.4	5.9		
SR-3Q	5.8	ø3.0	1.6~3.3	2.0	ø6.4	6.5		

返回图片索引

尼龙铆钉 SNAP RIVET

- MATERIAL: NYLON 66(UL)
- MATERIAL: NYLON 46(UL),NYLON 6(UL)
- FLAME CLASS: 94V-2
- COLOR: BLACK

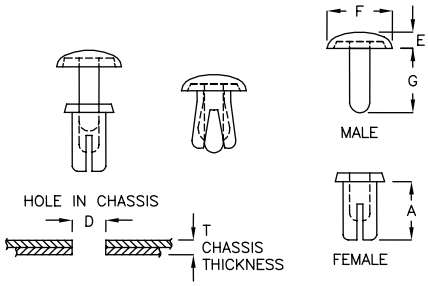

PART NO	A	D HOLE IN CHASSIS	T CHASSIS THICKNESS	E	F	G	MATERIAL	PACKAGE
SR-3LK	5.8	ø3.0	3.5~4.0	1.7	ø5.86	6.1	N66	2000
SR-3L	6.15	ø3.0	1.5~3.5	2.0	ø6.4	6.4		
SR-3XL	6.5	ø3.05	4.0~5.0	1.7	ø6.3	7.5		
SR-3BR	7.0	ø3.0	4.5~5.5	1.7	ø6.2	7.5		
SR-3B	7.5	ø3.0	3.5~4.6	1.7	ø6.2	8.5		
SR-3C	8.0	ø3.0	3.5~5.5	1.6	ø6.2	9.1		
SR-3V	8.3	ø3.0	5.0~6.3	1.6	ø6.2	8.6		
SR-3LC	9.3	ø3.0	6.3~7.3	1.6	ø6.2	9.6		
SR-3MP	10.3	ø3.0	7.3~8.3	1.6	ø6.2	10.6		
SR-3MQ	11.3	ø3.0	8.3~9.3	1.6	ø6.2	11.6	N66 or N46	
SR-3LQ	12.3	ø3.0	9.3~10.3	1.6	ø6.2	12.6	N66	
SR-3QF	13.3	ø3.0	10.3~11.3	1.6	ø6.2	13.6		
SR-3NR	4.5	ø3.1	2.0~3.0	1.6	ø6.4	6.1	N66 or N6	
SR-3FY	4.5	ø3.1	2.0~3.0	1.6	ø6.4	6.1	N6	
SR-3WG	5.5	ø3.1	3.0~4.0	1.6	ø6.4	6.2		
SR-03K	10.5	ø3.1	8.0~8.5	1.2	ø5.9	11.6	N66	
SR-03D	15.6	ø3.1	11.5~12.8	1.7	ø6.3	15.9		
SR-03U	4.5	ø3.2	1.5~3.0	1.8	ø6.2	5.7		
SR-3W	13.0	ø3.3	9.0~10.5	1.7	ø5.3	13.3		
SR-3CL	4.5	ø3.5	2.0~2.5	1.6	ø6.4	6.1		
SR-3	5.7	ø3.5	2.5~4.0	1.8	ø6.7	6.6		
SR-3DX	6.0	ø3.5	3.5~4.5	1.6	ø6.2	6.5		
SR-3FL	6.5	ø3.5	4.5~5.5	1.6	ø6.2	7.0		
SR-3GR	7.0	ø3.5	4.5~5.5	1.6	ø6.2	7.5		
SR-3HA	7.5	ø3.5	5.0~6.0	1.6	ø6.2	8.0		
SR-3NB	8.0	ø3.5	5.5~6.5	1.6	ø6.2	8.5		
SR-3SD	8.5	ø3.5	5.2~6.3	1.8	ø6.7	9.9		
SR-3AC	8.6	ø3.5	5.5~6.5	1.6	ø6.2	8.9		
SR-3MF	9.6	ø3.5	6.5~7.5	1.6	ø6.2	9.9		
SR-3CK	4.5	ø3.6	2.0~2.8	1.6	ø6.4	5.0		
SR-3CF	4.7	ø3.6	2.0~2.8	1.6	ø6.4	5.0		
SR-3DR	5.1	ø3.6	2.7~3.6	1.65	ø6.3	6.25	N6	
SR-3DK	7.0	ø3.6	4.3~5.3	1.6	ø6.4	7.5	N66	
SR-3WJ	9.3	ø3.8	5.0~6.5	1.7	ø6.7	11.3		
SR-3KF	6.0	ø3.6	3.7~4.6	1.6	ø6.4	7.1	N6	

尼龙铆钉 SNAP RIVET 5-30-1

- MATERIAL: NYLON 66(UL)
- MATERIAL: NYLON 46(UL)
- FLAME CLASS: 94V-0/94V-2
- COLOR: BLACK

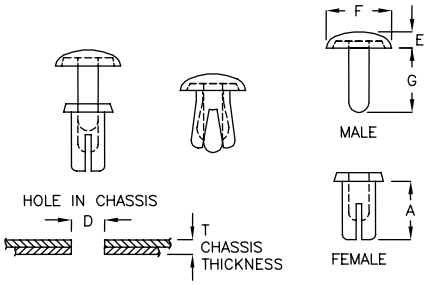

PART NO	A	D HOLE IN CHASSIS	T CHASSIS THICKNESS	E	F	G	MATERIAL	PACKAGE
SR-4GS	4.4	ø4.0	1.0~2.2	2.1	ø7.9	4.55	N66	2000
SR-4Q	5.0	ø4.0	1.1~3.1	2.1	ø7.9	6.0		
SR-4QR	5.3	ø4.0	3.0~3.5	1.8	ø7.0	5.35		
SR-4FM	5.5	ø4.0	2.2~2.8	2.1	ø7.9	6.0	N66 or N46	
SR-4TF	5.0	ø4.0	2.5~3.5	1.9	ø7.8	6.2	N66	
SR-4KC	6.0	ø4.0	2.5~3.5	1.9	ø7.7	7.0		
SR-4	6.2	ø4.0	2.0~4.5	1.9	ø7.9	7.3		
SR-4WA	6.2	ø4.0	2.7~4.0	2.0	ø7.9	6.5	N66 or N46	
SR-4HP	6.2	ø4.0	3.5~4.0	1.9	ø7.7	7.2	N66	
SR-4BR	6.5	ø4.0	3.2~3.8	2.1	ø7.9	6.8		
SR-04F	7.0	ø4.0	3.8~4.6	2.0	ø8.0	9.0		
SR-4RW	7.1	ø4.0	4.5~5.0	2.0	ø8.0	8.1		
SR-4LF	7.5	ø4.0	5.0~5.5	1.9	ø7.7	8.5		
SR-4N	7.8	ø4.0	5.4~6.0	1.8	ø8.1	8.8		
SR-4S	8.0	ø4.0	3.5~5.0	1.7	ø7.0	8.8		
SR-4GB	8.1	ø4.0	5.5~6.5	2.0	ø8.0	9.0		
SR-4YH	8.5	ø4.0	5.2~5.8	2.1	ø7.9	8.8		
SR-4PW	9.0	ø4.0	6.5~7.5	2.0	ø8.0	10.2		
SR-4M	9.7	ø4.0	6.0~7.0	1.7	ø7.0	11.1		
SR-4J	10.0	ø4.0	5.5~7.6	1.8	ø8.2	11.0		
SR-4QP	10.0	ø4.0	7.5~8.5	2.0	ø8.0	10.5		
SR-4FQ	11.4	ø4.0	8.5~9.5	1.95	ø8.0	11.9	N66 or N46	
SR-4L	12.4	ø4.0	7.5~8.5	1.7	ø7.9	14.1	N66	
SR-4XN	12.4	ø4.0	7.8~8.5	1.7	ø5.5	14.1		
SR-4MK	12.4	ø4.0	9.5~10.5	1.95	ø8.0	12.9		
SR-4QJ	13.4	ø4.0	10.5~11.5	1.95	ø8.0	13.9		
SR-04D	15.6	ø4.0	11.2~12.5	1.7	ø6.7	15.9		
SR-4PT	20.0	ø4.0	15.0~17.5	1.9	ø8.0	20.3		

返回图片索引

尼龙铆钉 SNAP RIVET 5-31-1

- MATERIAL: NYLON 66(UL)
- MATERIAL: NYLON 46(UL), NYLON 6(UL)
- FLAME CLASS: 94V-2
- COLOR: BLACK

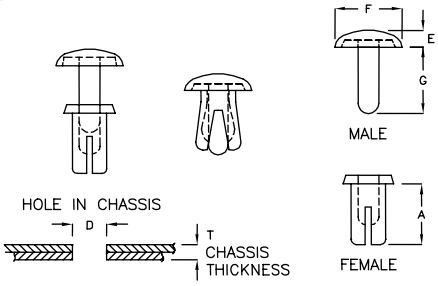

PART NO	A	D HOLE IN CHASSIS	T CHASSIS THICKNESS	E	F	G	MATERIAL	PACKAGE
SR-4PK	20.0	ø4.0	17.5~18.0	1.7	ø6.8	20.3	N66	2000
SR-4PH	21.0	ø4.0	18.0~18.5	1.7	ø6.8	21.3		
SR-4HK	5.1	ø4.1	2.0~3.2	1.8	ø8.15	6.3		
SR-4LK	6.1	ø4.1	3.5~4.2	1.8	ø8.15	7.1		
SR-4FK	7.0	ø4.1	4.5~5.4	1.8	ø8.0	7.5		
SR-4JK	8.9	ø4.1	5.6~6.6	1.8	ø8.1	10.9		
SR-4JM	9.9	ø4.1	7.5~8.3	1.8	ø8.1	10.9		
SR-4TQ	11.4	ø4.1	8.5~9.5	2.0	ø7.9	11.9	N46	
SR-4KS	8.3	ø4.3	4.0~6.0	1.7	ø7.6	10.2	N66	
SR-4KT	8.3	ø4.3	4.0~6.0	1.7	ø9.6	10.2		
SR-04I	10.5	ø4.3	7.1~8.1	2.0	ø7.9	12.5		
SR-4SF	12.3	ø4.3	8.0~9.0	1.2	ø5.9	13.8		
SR-4LT	10.2	ø4.5	5.0~6.0	1.7	ø7.9	12.1		
SR-4LA	12.3	ø4.5	7.8~9.0	1.7	ø7.9	14.1		
SR-5S	4.6	ø5.0	1.0~2.0	2.1	ø8.9	6.7		
SR-5YN	5.5	ø5.0	2.0~3.0	2.2	ø8.3	5.7		
SR-5TC	5.5	ø5.0	2.5~3.5	2.2	ø8.9	6.0		
SR-5	7.7	ø5.0	3.8~5.0	2.2	ø8.9	8.3		
SR-05F	4.7	ø5.1	1.5~2.5	2.2	ø9.0	5.5		
SR-05M	5.5	ø5.1	2.5~3.2	2.2	ø9.0	6.0		
SR-05D	6.5	ø5.1	3.5~4.3	2.2	ø9.0	7.0		
SR-05H	7.7	ø5.1	4.5~5.5	2.2	ø9.0	8.5		
SR-05J	8.7	ø5.1	5.5~6.5	2.3	ø9.1	9.5		
SR-05K	9.7	ø5.1	6.5~7.5	2.3	ø9.1	10.6		
SR-05L	10.7	ø5.1	7.5~8.5	2.2	ø9.0	11.5		
SR-6MD	6.2	ø6.0	2.5~4.0	2.5	ø12.0	8.9	N66	1000
★ SR-6VP	17.2	ø6.0	13.0~14.5	2.5	ø12.0	18.0	N66	2000
SR-6NT	6.2	ø6.1	2.5~4.0	2.5	ø12.0	8.9	N6	1000
SR-07C	11.2	ø7.0	8.0~9.0	1.8	ø12.0	12.0	N66	2000

尼龙铆钉 SNAP RIVET 5-31-2

- MATERIAL: NYLON 46(UL)
- FLAME CLASS: 94V-0/94V-2
- COLOR: BLACK

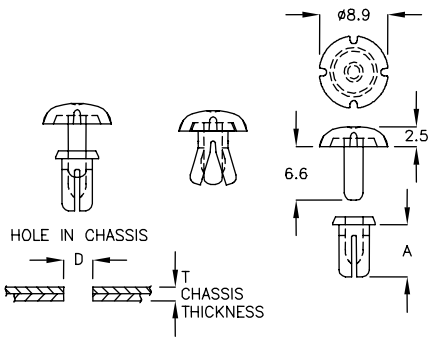

PART NO	A	D HOLE IN CHASSIS	T CHASSIS THICKNESS	PACKAGE
SR-4AH	6.4	ø4.0	3.5~4.5	2000

尼龙铆钉 SNAP RIVET 5-32-1

- MATERIAL: NYLON 66(UL)
- FLAME CLASS: 94V-0/94V-2
- COLOR: BLACK

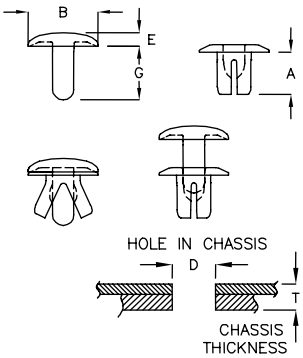

PART NO	A	B	D HOLE IN CHASSIS	E	G	T CHASSIS THICKNESS	PACKAGE
★ SR-3RU	7.0	ø6.2	ø3.5	1.6	7.5	4.5~5.5	2000
SR-4ZT	5.5	ø9.0	ø4.5	1.8	6.9	1.5~3.0	2000

尼龙铆钉 SNAP RIVET 5-32-2

- MATERIAL: NYLON 66(UL)
- FLAME CLASS: 94V-0/94V-2
- COLOR: BLACK

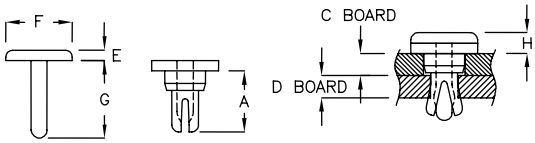

PART NO	A	C BOARD HOLE DIA	D BOARD HOLE DIA	C BOARD THICKNESS	D BOARD THICKNESS	E	F	G	H	PACKAGE
SRFK-2H	3.3	ø2.4	ø1.8	1.1	1.0~1.2	0.5	ø3.5	4.3	1.0	2000
SRFK-2D	4.4	ø3.0	ø2.0	1.6	0.8~1.6	0.75	ø4.8	5.6	1.5	
SRFK-2C	5.4	ø3.0	ø2.0	2.6	0.8~1.6	0.75	ø4.8	6.6	1.5	
SRFK-2F	6.4	ø3.0	ø2.0	3.6	0.8~1.6	0.75	ø4.8	7.6	1.5	

尼龙铆钉 SNAP RIVET 5-32-3

- MATERIAL: NYLON 66(UL)
- FLAME CLASS: 94V-0/94V-2
- COLOR: NATURAL

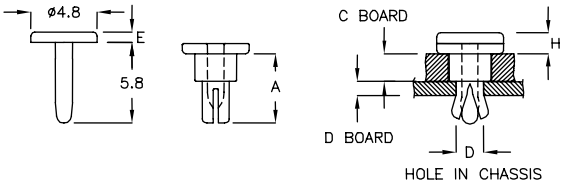

PART NO	A	E	H	C BOARD HOLE DIA	D BOARD HOLE DIA	C BOARD THICKNESS	D BOARD THICKNESS	PACKAGE
SRFK-2RT	5.0	0.75	1.5	ø3.0	ø2.0	2.1	0.8~1.6	2000

尼龙铆钉 SNAP RIVET 5-32-4

- MATERIAL: NYLON 66(UL)
- FLAME CLASS: 94V-0/94V-2
- COLOR: BLACK

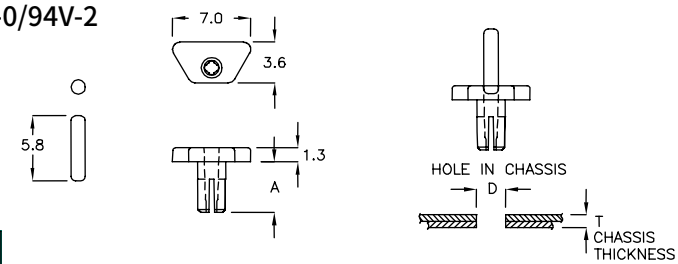

PART NO	HOLE D	A	T CHASSIS THICKNESS	PACKAGE
STR-4C	ø2.7	4.5	3.0~3.1	2000

返回图片索引

固定扣 NIFLATCH 5-33-1

- MATERIAL: NYLON 66(UL)
- FLAME CLASS: 94V-0/94V-2
- COLOR: BLACK

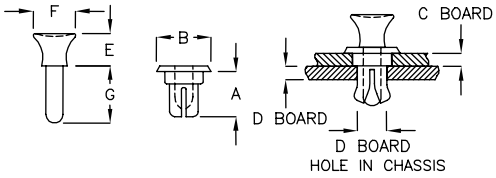

PART NO	A	B	C BOARD HOLE DIA	D BOARD HOLE DIA	C BOARD THICKNESS	D BOARD THICKNESS	E	F	G	PACKAGE
SRDW−2H	3.3	ø4.8	ø2.4	ø1.8	1.1	1.0~1.2	3.0	ø4.0	4.3	2000
SRDW−2D	4.4	ø4.8	ø3.0	ø2.0	1.6	0.8~1.6	3.5	ø4.5	5.6	
SRDW−2C	5.4	ø4.8	ø3.0	ø2.0	2.6	0.8~1.6	3.5	ø4.5	6.6	
SRDW−2F	6.4	ø4.8	ø3.0	ø2.0	3.6	0.8~1.6	3.5	ø4.5	7.6	
SR−4KK	7.0	ø8.5	ø6.0	ø4.5	2.0	2.0	5.0	ø6.6	8.9	

尼龙铆钉 SNAP RIVET 5-33-2

- MATERIAL: NYLON 66(UL)
- FLAME CLASS: 94V-0/94V-2
- COLOR: BLACK

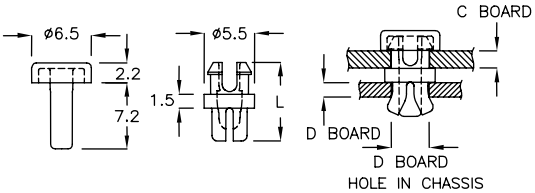

PART NO	C BOARD HOLE DIA	D BOARD HOLE DIA	C BOARD THICKNESS	D BOARD THICKNESS	L	PACKAGE
SRQM−4C	ø4.2	ø4.0	2.0	1.6	8.6	500

尼龙铆钉 SNAP RIVET 5-33-3

- MATERIAL: NYLON 66(UL)
- FLAME CLASS: 94V-0/94V-2
- COLOR: BLACK

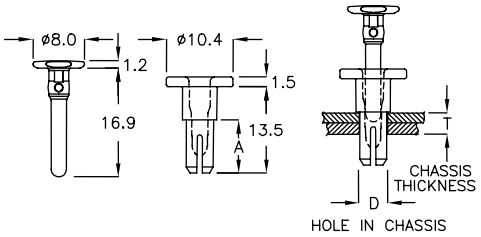

PART NO	A	D HOLE IN CHASSIS	T CHASSIS THICKNESS	PACKAGE
SRMD−4Q	8.3	ø4.5	4.0	2000

尼龙铆钉 SNAP RIVET 5-33-4

- MATERIAL: NYLON 66(UL)
- FLAME CLASS: 94V-0/94V-2
- COLOR: BLACK

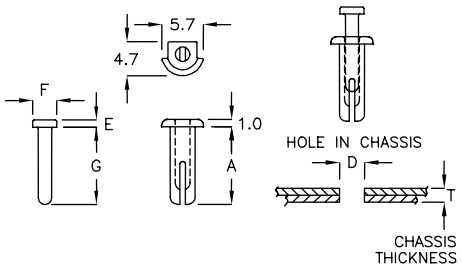

PART NO	A	D HOLE IN CHASSIS	E	F	G	T CHASSIS THICKNESS	PACKAGE
SRQ−3AH	10.5	ø3.5	1.0	ø3.4	11.0	8.0	2000
SRQ−3PT	12.0	ø3.5	1.0	ø3.4	13.0	8.0	

提醒：本公司产品之材料、尺寸、规格、公差及配合件要求，以产品承认书为主。
All the material, dimension, spec., tolerance and assembled method are mainly based on DATA SHEET issued by PINGOOD.

尼龙铆钉 SNAP RIVET 5-34-1

- MATERIAL: NYLON 66(UL)
- FLAME CLASS: 94V-0/94V-2
- COLOR: BLACK

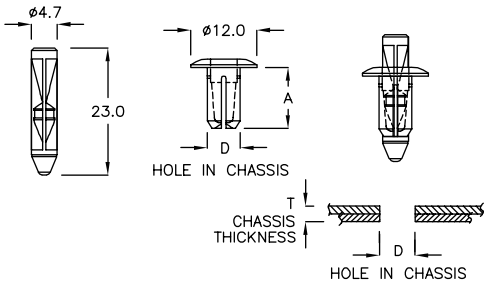

PART NO	A	D HOLE IN CHASSIS	T CHASSIS THICKNESS	PACKAGE
SR-12A	11.0	ø6.1	7.7~8.3	2000

铆钉 CANOE CLIP 5-34-2

- MATERIAL: NYLON 66(UL)
- FLAME CLASS: 94V-0/94V-2
- COLOR: NATURAL

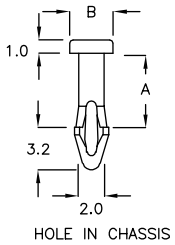

PART NO	A	B	T CHASSIS THICKNESS	PACKAGE
MB-05F	5.6	ø3.3	5.4	2000

铆钉 CANOE CLIP 5-34-3

- MATERIAL: NYLON 66(UL)
- FLAME CLASS: 94V-0/94V-2
- COLOR: NATURAL

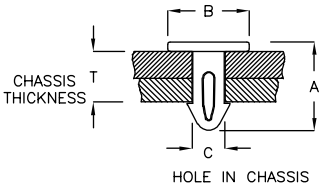

PART NO	A	B	C	T CHASSIS THICKNESS	PACKAGE
MBL-4HW	5.05	5.2	ø2.1	2.5	2000
MBL-5FQ	5.65	5.2	ø2.1	3.1	

铆钉 CANOE CLIP 5-34-4

- MATERIAL: NYLON 66(UL)
- FLAME CLASS: 94V-0/94V-2
- COLOR: BLACK

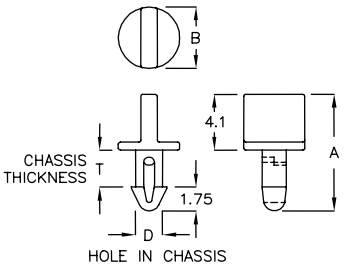

PART NO	A	B	D HOLE IN CHASSIS	T CHASSIS THICKNESS	PACKAGE
MBL-4JC	8.55	ø4.5	ø2.1	2.5	2000

铆钉 CANOE CLIP 5-34-5

- MATERIAL: NYLON 66(UL)
- FLAME CLASS: 94V-0/94V-2
- COLOR: NATURAL

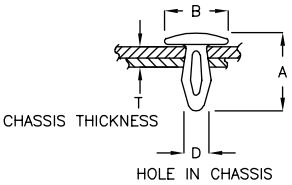

PART NO	A	B	T CHASSIS THICKNESS	D HOLE IN CHASSIS	PACKAGE
MB-01F	7.4	ø4.8	2.4~2.7	ø2.37	2000
MB-04C	15.4	ø9.0	4.3~4.8	ø4.5	1000
MB-05A	14.7	ø12.0	0.7~1.2	ø5.0	
MB-05D	15.3	ø12.0	0.7~1.0	ø5.0	

返回图片索引

铆钉 CANOE CLIP 5-35-1

- MATERIAL: NYLON 66(UL)
- FLAME CLASS: 94V-0/94V-2
- COLOR: NATURAL

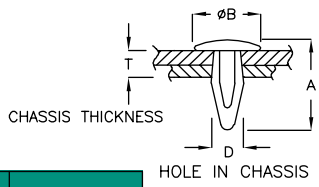

PART NO	A	B	T CHASSIS THICKNESS	D HOLE IN CHASSIS	PACKAGE
MB-1	9.7	ø7.4	2.0~3.5	ø3.0~ø3.2	2000
MB-1A	9.7	ø6.8	1.1~1.7	ø3.1~ø3.2	
MB-1C	6.2	ø6.9	1.6~2.0	ø2.95~ø3.0	
MB-1D	6.8	ø7.0	1.6~1.9	ø3.15~ø3.2	
MB-1S	7.2	ø7.0	1.5~2.1	ø3.1~ø3.2	
MB-01H	10.3	ø7.7	3.0~3.2	ø3.3~ø3.4	
MB-2	10.3	ø7.9	3.5~4.0	ø3.5~ø3.7	
MB-2S	10.3	ø7.8	2.8~3.8	ø3.2~ø3.4	
MB-3	12.4	ø7.7	3.2~5.0	ø3.7~ø3.8	
MB-3FC	7.5	ø5.6	2.4~2.7	ø2.95~3.05	
MB-3KA	7.5	ø6.0	2.4~2.7	ø3.45~3.55	
MB-4	12.9	ø10.0	2.1~3.7	ø3.9~ø4.05	
MB-04Q	9.0	ø6.0	2.5~3.5	ø3.8~ø4.0	
MB-5S	10.9	ø10.0	1.6~2.1	ø3.2~ø3.25	1000
MB-05C	13.2	ø12.7	2.5~3.5	ø4.0~ø4.05	
MB-11A	12.6	ø9.5	2.5~4.0	ø4.65~ø4.8	
MB-12	12.0	ø7.4	1.6~2.1	ø3.3~ø3.4	2000

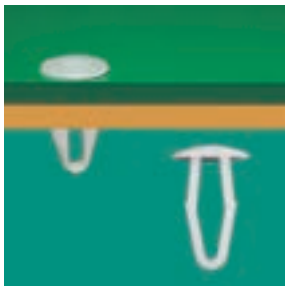

铆钉 CANOE CLIP 5-35-2

- MATERIAL: POM
- COLOR: NATURAL

NEW

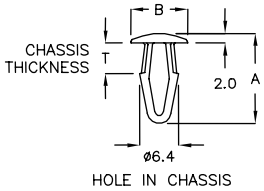

	PART NO	A	B	T CHASSIS THICKNESS	PACKAGE
★	MBE-12A	19.0	ø12.0	1.5~6.5	1000

铆钉 CANOE CLIP 5-35-3

- MATERIAL: NYLON 66(UL)
- FLAME CLASS: 94V-0/94V-2
- COLOR: NATURAL

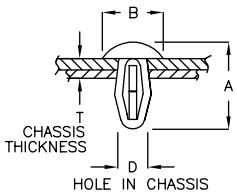

PART NO	A	B	T CHASSIS THICKNESS	D HOLE IN CHASSIS	PACKAGE
MB-2K	8.6	ø5.8	2.8~3.0	ø3.2~ø3.3	2000

铆钉 MOUNTING BUTTON 5-35-4

- MATERIAL: NYLON 66(UL)
- FLAME CLASS: 94V-0/94V-2
- COLOR: NATURAL

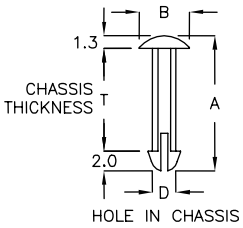

PART NO	A	B	T CHASSIS THICKNESS	D HOLE IN CHASSIS	PACKAGE
MB-08K	13.8	ø5.1	10.1	ø2.54	2000
MB-15GH	15.3	ø5.1	11.8	ø2.5	

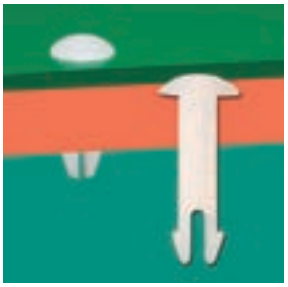

铆钉 MOUNTING BUTTON 5-36-1

- MATERIAL: NYLON 66(UL)
- FLAME CLASS: 94V-0/94V-2
- COLOR: NATURAL

PART NO	A	B	T CHASSIS THICKNESS	PACKAGE
MB-2GC	6.2	ø4.0	2.7	2000
MB-08R	11.7	ø5.1	8.2	

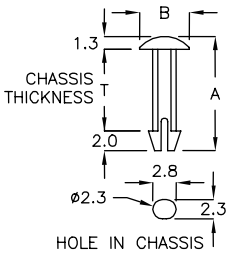

铆钉 CANOE CLIP 5-36-2

- MATERIAL: NYLON 66(UL)
- FLAME CLASS: 94V-0/94V-2
- COLOR: NATURAL

PART NO	A	B	T CHASSIS THICKNESS	PACKAGE
MB-08M	6.6	ø5.5	2.2	2000
MB-8AC	7.9	ø5.5	3.5	
MB-8DK	8.5	ø5.5	4.1	

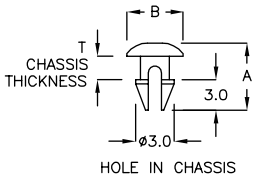

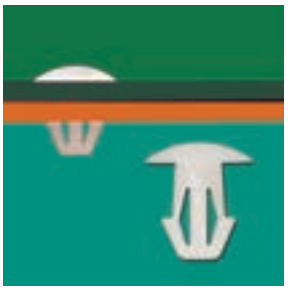

铆钉 CANOE CLIP 5-36-3

- MATERIAL: NYLON 66(UL)
- FLAME CLASS: 94V-0/94V-2
- COLOR: NATURAL

PART NO	A	B	T CHASSIS THICKNESS	PACKAGE
MB-08P	7.2	ø6.4	3.2	2000

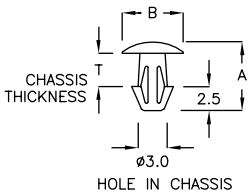

铆钉 MOUNTING BUTTON 5-36-4

- MATERIAL: NYLON 66(UL)
- FLAME CLASS: 94V-0/94V-2
- COLOR: NATURAL

PART NO	A	B	D	E	F	T CHASSIS THICKNESS	PACKAGE
MB-8A	7.5	ø5.1	ø3.0	1.8	3.4	7.3	2000
MB-08C	3.5	ø6.2	ø3.0	1.9	3.8	3.4	
MB-08D	4.7	ø6.0	ø3.5	1.5	4.1	4.5	

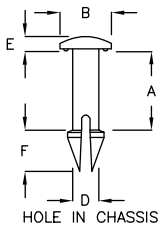

铆钉 MOUNTING BUTTON 5-36-5

- MATERIAL: NYLON 66(UL)
- FLAME CLASS: 94V-0/94V-2
- COLOR: NATURAL

PART NO	A	B	D	E	F	CHASSIS THICKNESS	PACKAGE
MB-08G	3.55	ø6.2	ø3.0	1.9	1.4	3.4	2000
MB-08H	8.25	ø5.1	ø3.3	1.4	2.2	8.1	
MB-015	8.8	ø5.1	ø3.0	1.7	2.2	8.6	

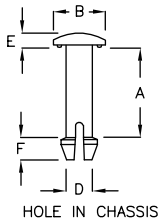

返回图片索引

铆钉 CANOE CLIP 5-37-1

- MATERIAL: NYLON 66(UL)
- FLAME CLASS: 94V-0/94V-2
- COLOR: BLACK

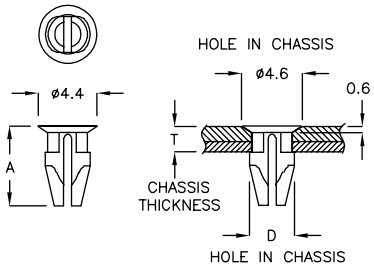

PART NO	A	D HOLE IN CHASSIS	T CHASSIS THICKNESS	PACKAGE
MB-06	6.0	ø3.0	1.9	2000

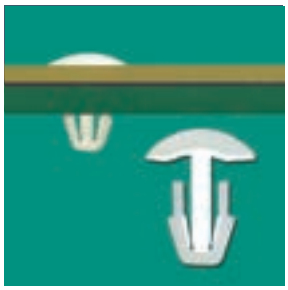

铆钉 CANOE CLIP 5-37-2

- MATERIAL: NYLON 66(UL)
- FLAME CLASS: 94V-0/94V-2
- COLOR: NATURAL

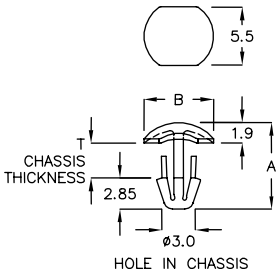

PART NO	A	B	T CHASSIS THICKNESS	PACKAGE
MBS-3A	7.95	ø6.4	3.2~3.6	1000

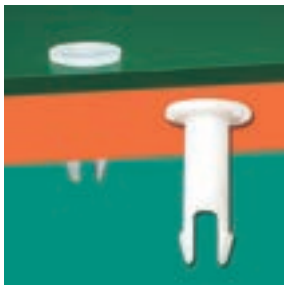

铆钉 MOUNTING BUTTON 5-37-3

- MATERIAL: NYLON 66(UL)
- FLAME CLASS: 94V-0/94V-2
- COLOR: NATURAL

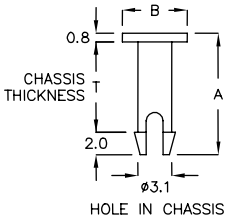

PART NO	A	B	T CHASSIS THICKNESS	PACKAGE
MBB-01	10.9	ø5.8	7.9	1000

铆钉 MOUNTING BUTTON 5-37-4

- MATERIAL: NYLON 66(UL)
- FLAME CLASS: 94V-0/94V-2
- COLOR: NATURAL

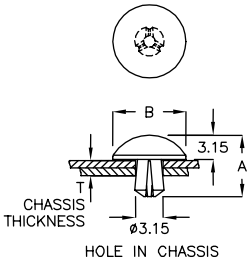

PART NO	A	B	T CHASSIS THICKNESS	PACKAGE
MHG-3A	8.0	ø9.5	2.0	2000

铆钉 MOUNTING BUTTON 5-37-5

- MATERIAL: NYLON 66(UL)
- FLAME CLASS: 94V-0/94V-2
- COLOR: NATURAL

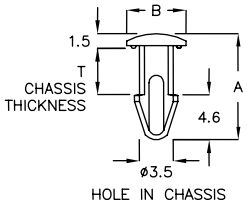

PART NO	A	B	T CHASSIS THICKNESS	PACKAGE
MB-08F	10.7	ø6.0	4.5	2000

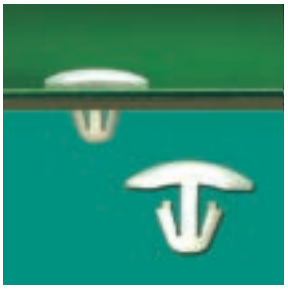

铆钉 CANOE CLIP 5-38-1

- MATERIAL: NYLON 66(UL)
- FLAME CLASS: 94V-0/94V-2
- COLOR: NATURAL

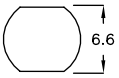

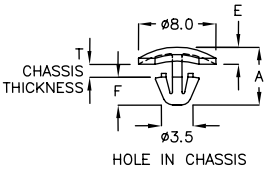

PART NO	A	E	F	T CHASSIS THICKNESS	PACKAGE
MBM−1MY	5.6	2.2	2.85	0.6~0.8	2000
MBM−1A	5.95	1.9	2.85	1.4~1.7	
MBM−2D	6.15	2.2	2.85	1.2~1.4	
MBM−2SA	6.65	2.2	2.85	1.7~1.9	
MBM−3PY	5.7	2.2	2.5	0.9~1.1	

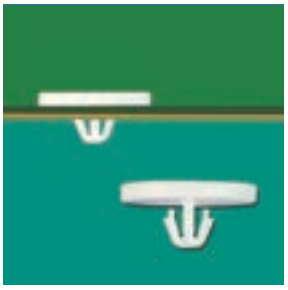

铆钉 CANOE CLIP 5-38-2

- MATERIAL: PC(UL)
- FLAME CLASS: 94V-0
- COLOR: NATURAL

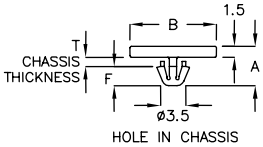

PART NO	A	B	F	T CHASSIS THICKNESS	PACKAGE
MBR−3SQ	5.45	ø12.0	2.65	1.1	2000
MBR−3AC	6.05	ø20.0	3.4	1.0	

铆钉 CANOE CLIP 5-38-3

- MATERIAL: NYLON 66(UL)
- FLAME CLASS: 94V-0/94V-2
- COLOR: BLACK

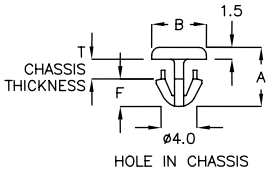

PART NO	A	B	F	T CHASSIS THICKNESS	PACKAGE
MB−07A	7.5	ø7.0	3.5	2.2	2000
MB−7AK	8.3	ø7.0	3.1	3.5	
MB−7DF	9.0	ø7.0	3.1	4.2	

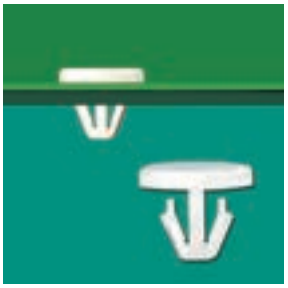

铆钉 CANOE CLIP 5-38-4

- MATERIAL: NYLON 66(UL)
- FLAME CLASS: 94V-0/94V-2
- COLOR: NATURAL

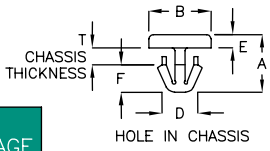

PART NO	A	B	D HOLE IN CHASSIS	E	F	T CHASSIS THICKNESS	PACKAGE
MBQ−1A	6.7	ø8.0	ø4.1	1.3	3.5	1.85	2000
MBQ−1DC	6.9	ø7.0	ø4.0	1.5	3.1	2.2	
MBQ−1PM	6.5	ø7.0	ø4.0	1.5	3.1	1.8	
MBQ−1FH	5.8	ø7.0	ø4.0	1.5	3.1	1.0	

铆钉 CANOE CLIP 5-38-5

- MATERIAL: NYLON 66(UL)
- FLAME CLASS: 94V-0/94V-2
- COLOR: BLACK

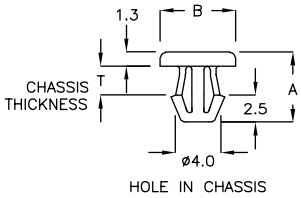

PART NO	A	B	T CHASSIS THICKNESS	PACKAGE
MBK−4A	6.5	ø7.0	2.4~2.6	2000

返回图片索引

铆钉 CANOE CLIP 5-39-1

- MATERIAL: NYLON 66(UL)
- FLAME CLASS: 94V-0/94V-2
- COLOR: NATURAL

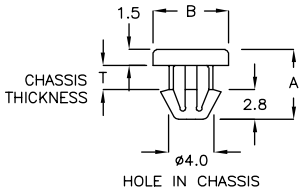

PART NO	A	B	T CHASSIS THICKNESS	PACKAGE
MBQ−1RF	6.5	ø7.0	1.6~1.9	2000

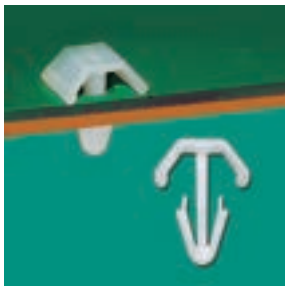

铆钉 MOUNTING BUTTON 5-39-2

- MATERIAL: NYLON 66(UL)
- FLAME CLASS: 94V-0/94V-2
- COLOR: NATURAL

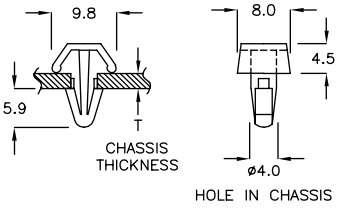

PART NO	T CHASSIS THICKNESS	PACKAGE
MB−10	2.5~3.2	1000

铆钉 MOUNTING BUTTON 5-39-3

- MATERIAL: NYLON 66(UL)
- FLAME CLASS: 94V-0/94V-2
- COLOR: BLACK

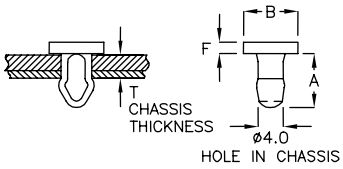

PART NO	A	B	F	T CHASSIS THICKNESS	PACKAGE
MBC−04	6.9	ø7.0	1.5	3.3	2000
MBC−4AK	5.8	ø7.0	1.5	2.2	
MBC−4DF	7.1	ø7.0	1.5	3.5	
MBC−4KM	8.1	ø7.0	2.0	4.5	

铆钉 RIVET 5-39-4

- MATERIAL: NYLON 66(UL)
- FLAME CLASS: 94V-0/94V-2
- COLOR: NATURAL

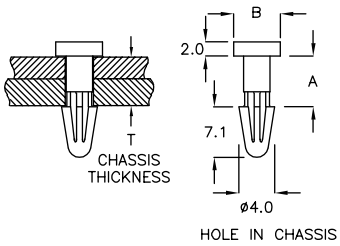

PART NO	A	B	T CHASSIS THICKNESS	PACKAGE
ACK−1A	7.0	ø6.5	6.8	2000

铆钉 MOUNTING BUTTON 5-39-5

- MATERIAL: NYLON 66(UL)
- FLAME CLASS: 94V-0/94V-2
- COLOR: NATURAL

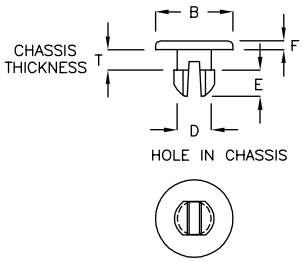

PART NO	B	T CHASSIS THICKNESS	D HOLE IN CHASSIS	E	F	PACKAGE
MB−9S	ø11.7	2.0	ø5.54	4.0	1.3	1000
MB−9	ø11.7	3.0	ø5.54	4.1	1.3	
MB−9K	ø15.1	4.3	ø7.4	4.7	1.3	
MB−09A	ø11.7	5.7	ø5.3	3.9	1.3	
MB−09M	ø8.0	2.6	ø5.0	3.3	0.5	

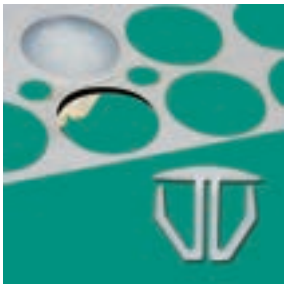

铆钉 CANOE CLIP 5-40-1

- MATERIAL: NYLON 66(UL)
- FLAME CLASS: 94V-0/94V-2
- COLOR: NATURAL

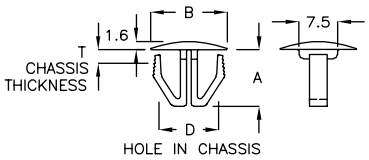

PART NO	A	B	T CHASSIS THICKNESS	D HOLE IN CHASSIS	PACKAGE
MBSK−10A	11.0	ø15.0	0.8~3.2	ø8.5~ø10.0	1000

铆钉 MOUNTING BUTTON 5-40-2

- MATERIAL: NYLON 66(UL)
- FLAME CLASS: 94V-0/94V-2
- COLOR: NATURAL

PART NO	A	B	T CHASSIS THICKNESS	PACKAGE
MBP−3JQ	2.0	12.5	1.8	2000

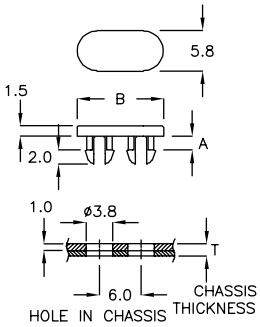

铆钉 MOUNTING BUTTON 5-40-3

- MATERIAL: NYLON 66(UL)
- FLAME CLASS: 94V-0/94V-2
- COLOR: BLACK
- HOLE IN HEAT SINK: Φ3.2
- SPECIFIC SPRING SPEC FOR APPLICATIVE THICKNESS OF CHASSIS

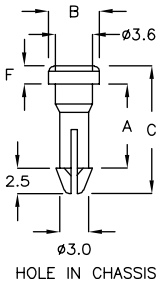

PART NO	A	B	C	F	PACKAGE
MB−08Y	8.3	ø5.0	12.55	1.75	2000
MB−15Y	14.6	ø6.4	19.85	2.75	

铆钉 MOUNTING BUTTON 5-40-4

- MATERIAL: NYLON 66(UL)
- FLAME CLASS: 94V-0/94V-2
- COLOR: BLACK

PART NO	A	B	C	PACKAGE
MB−21A	22.0	ø6.6	25.6	1000

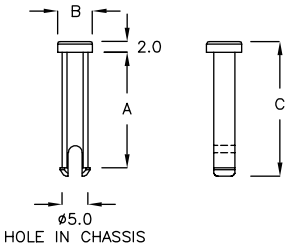

铆钉 MOUNTING BUTTON 5-40-5

- MATERIAL: NYLON 66(UL)
- FLAME CLASS: 94V-0/94V-2
- COLOR: BLACK

PART NO	A	B	C	PACKAGE
MB−22	22.1	ø6.6	25.4	1000

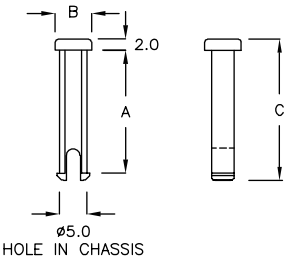

返回图片索引

铆钉 MOUNTING BUTTON 5-41-1

- MATERIAL: NYLON 66(UL)
- FLAME CLASS: 94V-0/94V-2
- COLOR: BLACK

PART NO	A	B	C	PACKAGE
MB-25A	7.6	ø6.6	25.4	1000

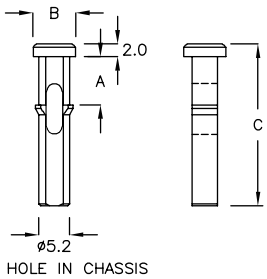

铆钉 MOUNTING BUTTON 5-41-2

- MATERIAL: NYLON 66(UL)
- FLAME CLASS: 94V-0/94V-2
- COLOR: NATURAL

PART NO	A	T CHASSIS THICKNESS	B	PACKAGE
MEK-01	16.7	6.5~7.5	ø10.6	2000

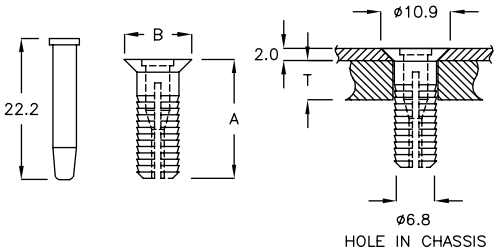

散热片铆钉 MOUNTING BUTTON 5-41-3

- MATERIAL: NYLON 66(UL)
- FLAME CLASS: 94V-0/94V-2
- COLOR: NATURAL

PART NO	A	C	F	T CHASSIS THICKNESS	PACKAGE
MB-05Y	4.2	10.7	2.8	3.0~4.2	2000
MB-07Y	7.0	13.5	2.8	4.5~6.0	
MB-07YA	9.0	15.2	2.5	4.5~7.0	

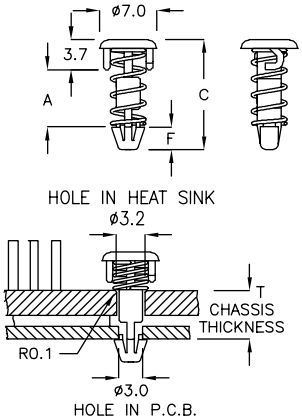

散热片铆钉 MOUNTING BUTTON 5-41-4

- MATERIAL: NYLON 66(UL)
- FLAME CLASS: 94V-0/94V-2
- COLOR: NATURAL

PART NO	A	C	F	T CHASSIS THICKNESS	PACKAGE
MB-07U	7.0	13.5	2.8	4.5~5.5	2000
MB-07UA	9.0	15.2	2.5	4.5~7.0	

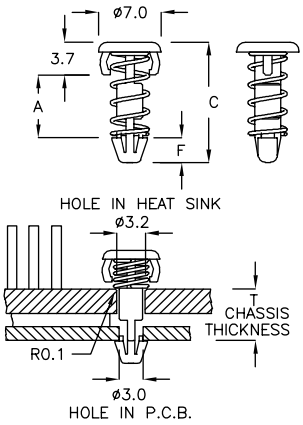

散热片铆钉 MOUNTING BUTTON 5-42-1

- MATERIAL: NYLON 66(UL)
- FLAME CLASS: 94V-0/94V-2
- COLOR: BLACK

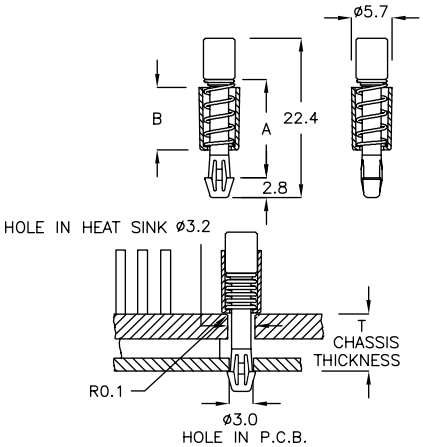

PART NO	A	B	CHASSIS THICKNESS	PACKAGE
MB-08J	13.8	8.8	5.0~8.5	2000

散热片铆钉 MOUNTING BUTTON 5-42-2

- MATERIAL: NYLON 66(UL)
- FLAME CLASS: 94V-0/94V-2
- COLOR: NATURAL,BLACK

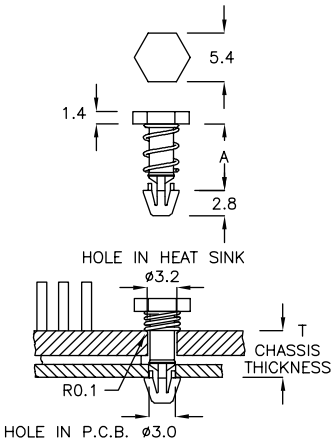

PART NO	A	CHASSIS THICKNESS	PACKAGE
MB-08N	7.4	3.0~4.0	2000

散热片铆钉 MOUNTING BUTTON 5-42-3

- MATERIAL: NYLON 66(UL)
- FLAME CLASS: 94V-0/94V-2
- COLOR: NATURAL

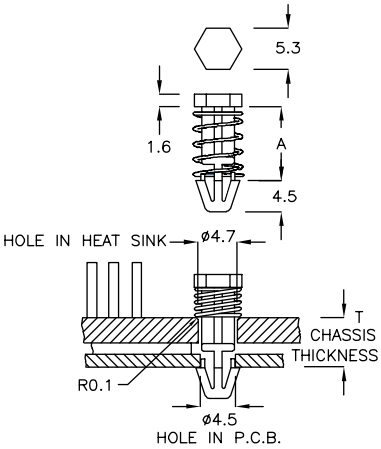

PART NO	A	CHASSIS THICKNESS	PACKAGE
MB-8KP	8.8	3.0~5.3	1000

散热片铆钉 MOUNTING BUTTON 5-42-4

- MATERIAL: NYLON 66(UL)
- FLAME CLASS: 94V-0/94V-2
- COLOR: NATURAL

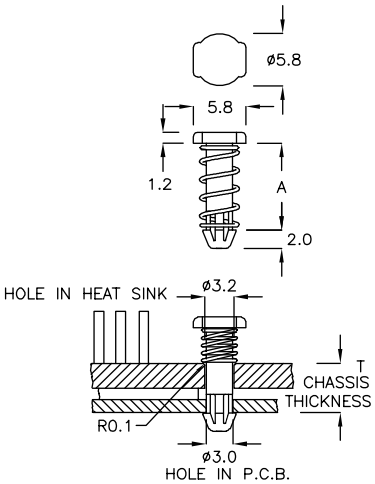

PART NO	A	CHASSIS THICKNESS	PACKAGE
MB-13	9.6	4.5~5.5	1000

返回图片索引

散热片铆钉 MOUNTING BUTTON 5-43-1

- MATERIAL: NYLON 66(UL)
- FLAME CLASS: 94V-0/94V-2
- COLOR: NATURAL,BLACK

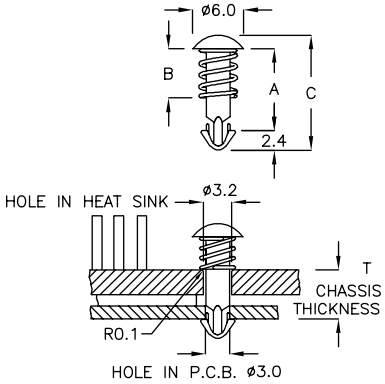

PART NO	A	B	C	CHASSIS THICKNESS	PACKAGE
MB-13A	9.6	7.8	13.5	3.6~5.0	2000
MB-21	17.6	14.7	21.6	7.5~9.0	

散热片铆钉 MOUNTING BUTTON 5-43-2

- MATERIAL: NYLON 66(UL)
- FLAME CLASS: 94V-0/94V-2
- COLOR: NATURAL

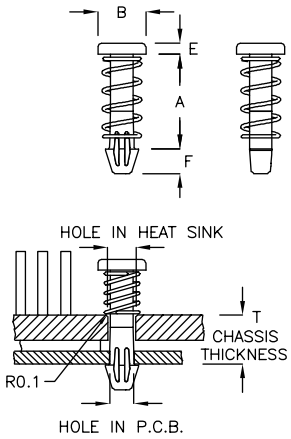

PART NO	A	B	HOLE IN P.C.B.	HOLE IN HEAT SINK	T CHASSIS THICKNESS	E	F	PACKAGE
MB-15C	12.5	ø6.4	ø3.0	ø3.2	5.5~6.5	1.5	3.3	1000
MB-15K	12.5	ø6.4	ø3.2	ø3.4	4.5~6.5	1.5	3.3	
MB-15F	14.0	ø5.5	ø3.0	ø3.2	7.0~8.0	1.5	2.8	2000

散热片铆钉 MOUNTING BUTTON 5-43-3

- MATERIAL: NYLON 66(UL)
- FLAME CLASS: 94V-0/94V-2
- COLOR: NATURAL

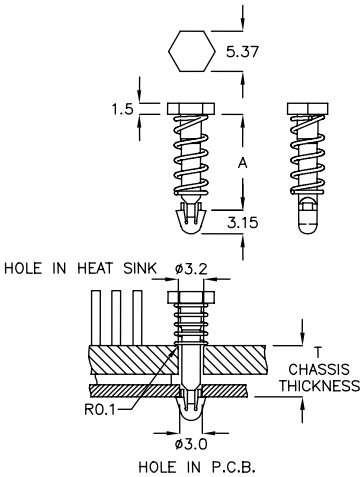

PART NO	A	T CHASSIS THICKNESS	PACKAGE
MB-17C	12.9	3.0~5.0	2000

散热片铆钉 MOUNTING BUTTON 5-44-1

- MATERIAL: NYLON 66(UL)
- FLAME CLASS: 94V-0/94V-2
- COLOR: NATURAL
- HOLE IN HEAT SINK: Φ3.2
- SPECIFIC SPRING SPEC FOR APPLICATIVE THICKNESS OF CHASSIS

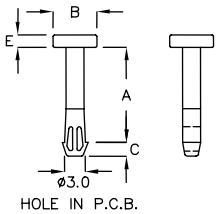

PART NO	A	B	C	E	PACKAGE
MB-11KH	9.0	ø6.2	1.5	1.2	2000
MB-14K	9.5	ø6.4	3.3	0.9	
MB-14A	9.5	ø6.4	3.3	1.5	
MB-13FD	11.0	ø6.2	1.5	1.2	
MB-07W	14.0	ø6.4	2.0	1.8	
MB-07C	14.0	ø6.4	3.3	1.8	
MB-15JQ	14.0	ø5.5	1.5	1.5	
MB-15D	15.0	ø5.0	2.0	1.8	

散热片铆钉 MOUNTING BUTTON 5-44-2

- MATERIAL: NYLON 66(UL)
- FLAME CLASS: 94V-0/94V-2
- COLOR: NATURAL

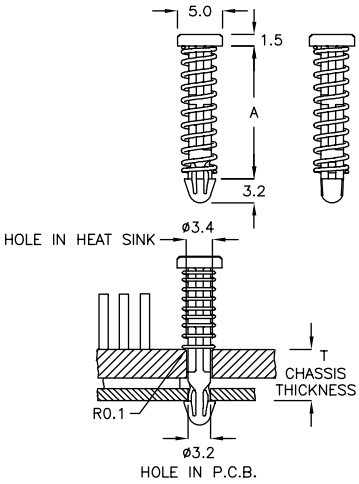

PART NO	A	T CHASSIS THICKNESS	PACKAGE
MB-17KM	17.7	7.5~9.5	1000

散热片铆钉 MOUNTING BUTTON 5-44-3

- MATERIAL: NYLON 66(UL)
- FLAME CLASS: 94V-0/94V-2
- COLOR: NATURAL,BLACK
- HOLE IN HEAT SINK: Φ3.2
- SPECIFIC SPRING SPEC FOR APPLICATIVE THICKNESS OF CHASSIS

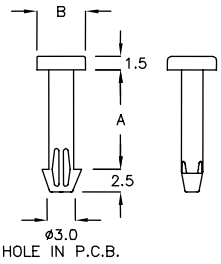

PART NO	A	B	PACKAGE
MB-15A	11.5	ø6.4	2000
MB-12XQ	8.7	ø6.4	

返回图片索引

散热片铆钉 MOUNTING BUTTON 5-45-1

- MATERIAL: NYLON 66(UL)
- FLAME CLASS: 94V-0/94V-2
- COLOR: NATURAL
- HOLE IN HEAT SINK: Φ3.2
- SPECIFIC SPRING SPEC FOR APPLICATIVE THICKNESS OF CHASSIS

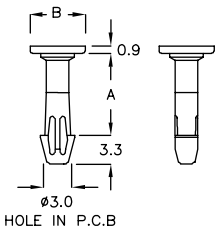

PART NO	A	B	PACKAGE
MB−14M	9.5	ø6.4	2000

散热片铆钉 MOUNTING BUTTON 5-45-2

- MATERIAL: NYLON 66(UL)
- FLAME CLASS: 94V-0/94V-2
- COLOR: BLACK
- HOLE IN HEAT SINK: Φ3.4
- SPECIFIC SPRING SPEC FOR APPLICATIVE THICKNESS OF CHASSIS

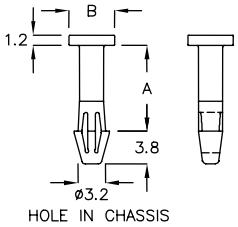

PART NO	A	B	PACKAGE
MB−15NK	10.0	ø5.3	2000

散热片铆钉 MOUNTING BUTTON 5-45-3

- MATERIAL: NYLON 66(UL)
- FLAME CLASS: 94V-0/94V-2
- COLOR: BLACK
- HOLE IN HEAT SINK: Φ3.7
- SPECIFIC SPRING SPEC FOR APPLICATIVE THICKNESS OF CHASSIS

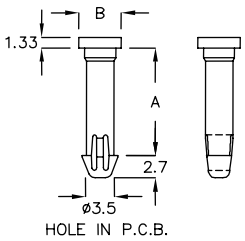

PART NO	A	B	PACKAGE
MB−17F	13.1	ø5.2	1000

散热片铆钉 MOUNTING BUTTON 5-45-4

- MATERIAL: NYLON 66(UL)
- FLAME CLASS: 94V-0/94V-2
- COLOR: NATURAL
- HOLE IN HEAT SINK: Φ3.2
- SPECIFIC SPRING SPEC FOR APPLICATIVE THICKNESS OF CHASSIS

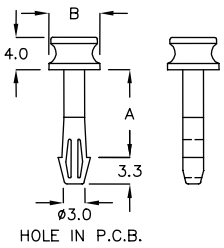

PART NO	A	B	PACKAGE
MB−99	11.0	ø6.4	2000
MB−99A	14.0	ø6.4	

散热片铆钉 MOUNTING BUTTON 5-45-5

- MATERIAL: NYLON 66(UL)
- FLAME CLASS: 94V-0/94V-2
- COLOR: BLACK
- HOLE IN HEAT SINK: Φ3.7
- SPECIFIC SPRING SPEC FOR APPLICATIVE THICKNESS OF CHASSIS

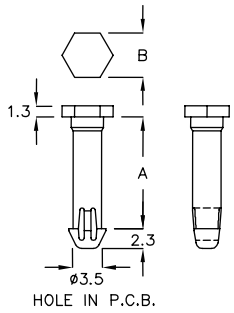

PART NO	A	B	PACKAGE
MBH−16K	13.1	5.2	1000

返回图片索引

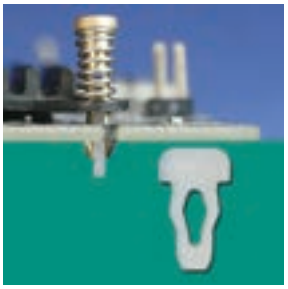

定位销 PIN PLANAR LOCATOR 5-46-1

- MATERIAL: NYLON 66(UL)
- FLAME CLASS: 94V-0/94V-2
- COLOR: NATURAL

PART NO	A	PACKAGE
MBZ-06	5.5	2000

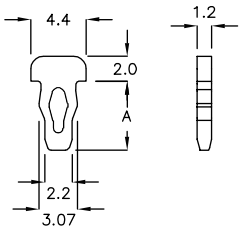

铆钉 CANOE CLIP 5-46-2

- MATERIAL: NYLON 66(UL)
- FLAME CLASS: 94V-0/94V-2
- COLOR: NATURAL

PART NO	A	T CHASSIS THICKNESS	PACKAGE
MB-014	4.6	>2.4	2000

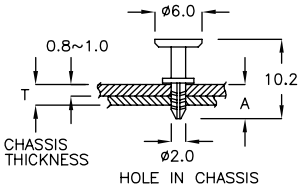

铆钉 CANOE CLIP 5-46-3

- MATERIAL: NYLON 66(UL)
- FLAME CLASS: 94V-0/94V-2
- COLOR: NATURAL

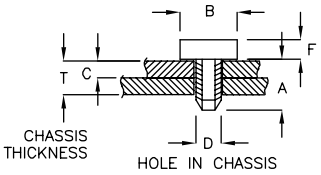

PART NO	A	B	C CHASSIS THICKNESS	D HOLE IN CHASSIS	F	T CHASSIS THICKNESS	PACKAGE
MB-14Q	3.1	ø3.5	0.8~1.0	ø1.8	1.2	>3.0	2000
MB-14R	3.8	ø5.0	0.8~1.0	ø3.0	0.7	>3.5	
MB-14S	3.8	ø5.0	0.8~1.0	ø3.0	0.5	>3.5	
MB-14H	5.5	ø5.0	0.8~1.0	ø3.0	0.5	>5.0	

铆钉 CANOE CLIP 5-46-4

- MATERIAL: NYLON 66(UL)
- FLAME CLASS: 94V-0/94V-2
- COLOR: BLACK

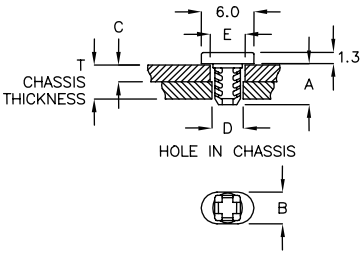

PART NO	A	B	C CHASSIS THICKNESS	D HOLE IN CHASSIS	E HOLE IN CHASSIS	T CHASSIS THICKNESS	PACKAGE
MBT-06	4.7	3.6	0.8~1.0	ø3.5	ø3.5	>5.0	2000
MBT-16J	15.0	3.9	1.0~1.2	ø3.5	ø4.0	>5.0	1000

铆钉 CANOE CLIP 5-46-5

- MATERIAL: NYLON 66(UL)
- FLAME CLASS: 94V-0/94V-2
- COLOR: NATURAL

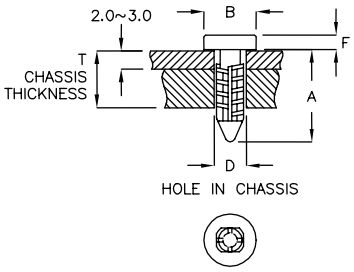

PART NO	A	B	D HOLE IN CHASSIS	F	T CHASSIS THICKNESS	PACKAGE
MB-011	9.7	ø5.5	ø2.9	1.5	>5.0	2000
MB-19A	17.6	ø10.9	ø5.0	1.0	>5.5	

返回图片索引

铆钉 CANOE CLIP 5-47-1

- MATERIAL: NYLON 66(UL)
- FLAME CLASS: 94V-0/94V-2
- COLOR: NATURAL

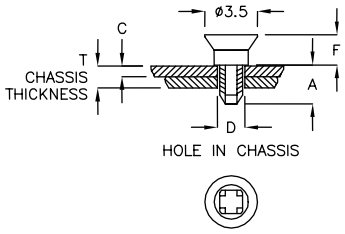

PART NO	A	C	F	D HOLE IN CHASSIS	T CHASSIS THICKNESS	PACKAGE
MB-14C	2.6	1.0	2.0	ø1.8	>2.6	2000
MB-14F	3.8	1.6	3.5	ø1.8	>3.8	

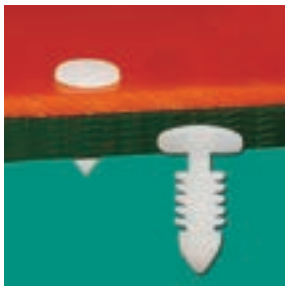

铆钉 CANOE CLIP 5-47-2

- MATERIAL: NYLON 66(UL)
- FLAME CLASS: 94V-0/94V-2
- COLOR: NATURAL

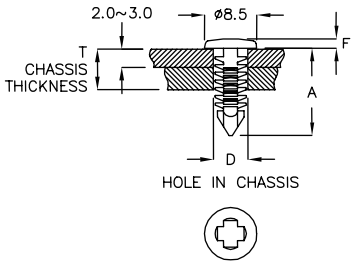

PART NO	A	F	D HOLE IN CHASSIS	T CHASSIS THICKNESS	PACKAGE
MB-17A	14.3	1.5	ø4.9~ø4.95	>8.0	1000

铆钉 MOUNTING BUTTON 5-47-3

- MATERIAL: NYLON 66(UL)
- FLAME CLASS: 94V-0/94V-2
- COLOR: NATURAL

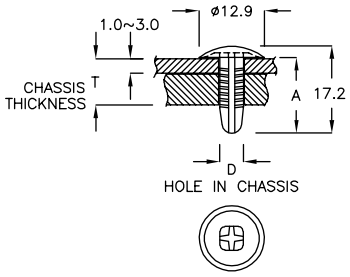

PART NO	A	D HOLE IN CHASSIS	T CHASSIS THICKNESS	PACKAGE
MB-17	14.9	ø5.0~ø5.1	>6.0	1000

铆钉 CANOE CLIP 5-47-4

- MATERIAL: NYLON 66(UL)
- FLAME CLASS: 94V-0/94V-2
- COLOR: BLACK

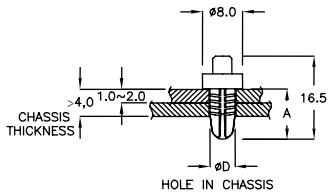

PART NO	A	D HOLE IN CHASSIS	PACKAGE
WCD-6A	10.0	ø5.6~ø5.7	2000

铆钉 CANOE CLIP 5-47-5

- MATERIAL: NYLON 66(UL)
- FLAME CLASS: 94V-0/94V-2
- COLOR: NATURAL

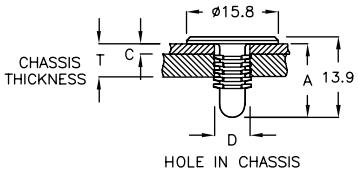

PART NO	A	C	D	T CHASSIS THICKNESS	PACKAGE
MBY-12JW	12.7	1.6	ø6.1	>6.0	1000

返回图片索引

铆钉 CANOE CLIP 5-48-1

- MATERIAL: NYLON 66(UL)
- FLAME CLASS: 94V-0/94V-2
- COLOR: NATURAL

PART NO	A	B HOLE IN CHASSIS	PACKAGE
MB-35	35.0	ø4.7~ø4.9	1000

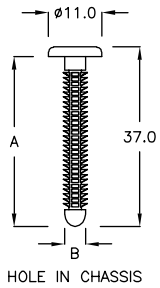

间隔柱用铆钉 SUPPORTING RIVET 5-48-2

- MATERIAL: NYLON 66(UL)
- FLAME CLASS: 94V-0/94V-2
- COLOR: NATURAL

PART NO	A	B	T MAXIMUM THICKNESS	PACKAGE
MB-14D	5.0	ø2.5	3.0	2000

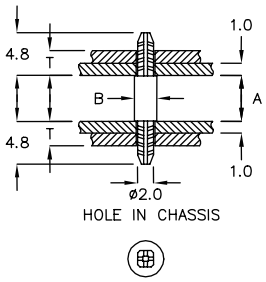

铆钉 CANOE CLIP 5-48-3

- MATERIAL: NYLON 66(UL)
- FLAME CLASS: 94V-0/94V-2
- COLOR: NATURAL

PART NO	A	D HOLE IN CHASSIS	CHASSIS THICKNESS	PACKAGE
MBTR-32	30.0	ø7.1	1.5~25.4	1000

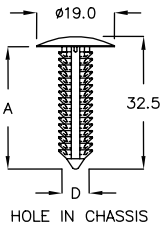

铆钉 CANOE CLIP 5-48-4

- MATERIAL: NYLON 66(UL)
- FLAME CLASS: 94V-0/94V-2
- COLOR: NATURAL

PART NO	A	C CHASSIS THICKNESS	E CHASSIS THICKNESS	T CHASSIS THICKNESS	PACKAGE
MBDA-24	17.5	2.3	0.8	12.0	1000

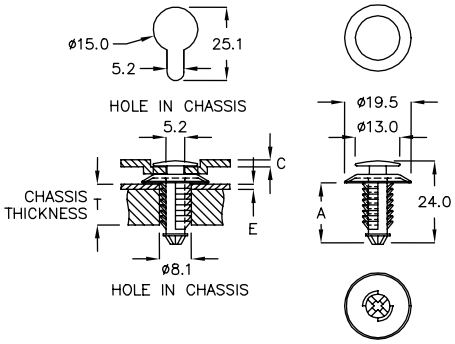

螺丝固定扣 PLASTIC SCREW 5-48-5

- MATERIAL: NYLON 66(UL)
- FLAME CLASS: 94V-0/94V-2
- COLOR: BLACK

PART NO	A	B	PACKAGE
SZ-3M15HC	ø12.0	14.0	1000

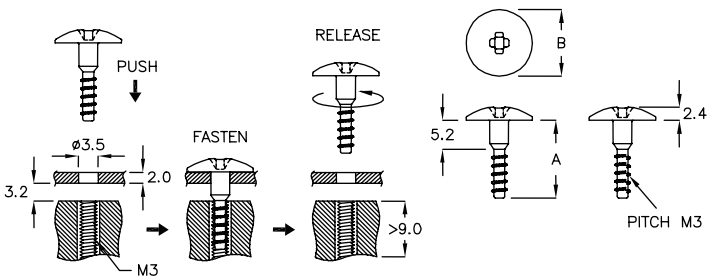

返回图片索引

螺丝固定扣 PLASTIC SCREW 5-49-1

- MATERIAL: NYLON 66(UL)
- FLAME CLASS: 94V-0/94V-2
- MATERIAL: ABS+PC
- FLAME CLASS: 94V-0
- COLOR: BLACK

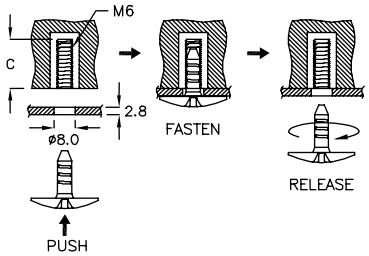

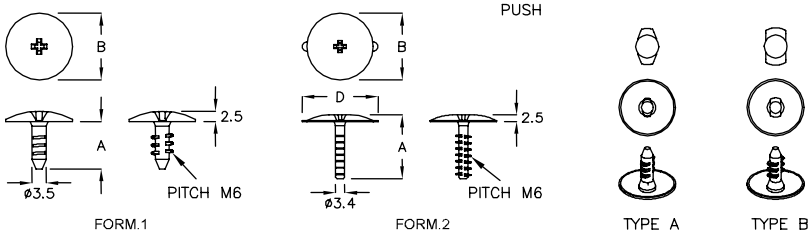

PART NO	MATERIAL	A	B	C	D	HEAD STYLE	FIN STYLE	PACKAGE
SZ-6M12	N66	12.0	ø16.8	18.5		FORM.1	TYPE A	1000
SZ-6M12KD	N66	12.0	ø16.8	18.5		FORM.1	TYPE B	
SZ-6M13F	N66	13.5	ø20.0	18.5	24.0	FORM.2	TYPE B	
SZ-6M17D	N66	17.5	ø20.0	22.0	24.0	FORM.2	TYPE B	
SZ-6M21MQ	N66	21.5	ø20.0	25.0	24.0	FORM.2	TYPE B	
SZ-6M21A	ABS+PC	21.5	ø25.0	25.0	28.6	FORM.2	TYPE A	

铆钉 SNAP RIVET 5-49-2

- MALE MATERIAL: NYLON 66(UL)
- FEMALE MATERIAL: PC(UL)
- FLAME CLASS: 94V-2
- COLOR: BLACK

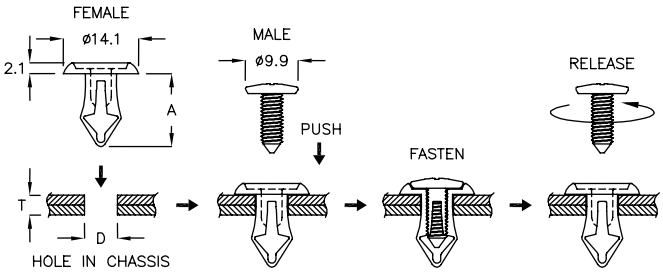

PART NO	A	D HOLE IN CHASSIS	T CHASSIS THICKNESS	PACKAGE
MEL-6A	13.65	ø5.9	4.5	1000

铆钉 SNAP RIVET 5-49-3

- MATERIAL: PC(UL)
- FLAME CLASS: 94V-0
- COLOR: BLACK

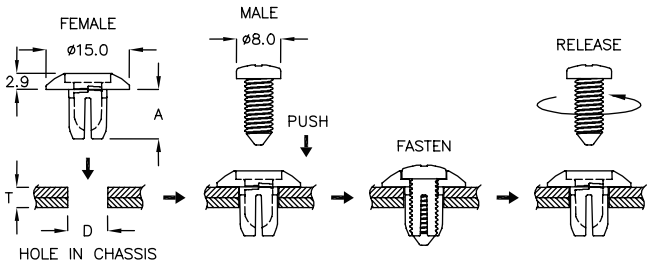

PART NO	A	D HOLE IN CHASSIS	T CHASSIS THICKNESS	PACKAGE
MEP-07	8.86	ø7.0	4.0~5.5	1000

铆钉 SNAP RIVET 5-50-1

- MATERIAL: NYLON 66(UL)
- FLAME CLASS: 94V-0/94V-2
- COLOR: BLACK

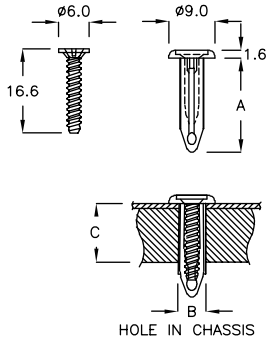

PART NO	A	B HOLE IN CHASSIS	C CHASSIS THICKNESS	PACKAGE
MEC-18	18.45	ø5.0	9.5~11.5	1000

铆钉 MOUNTING BUTTON 5-50-2

- MALE MATERIAL: NYLON 66(UL)
- FLAME CLASS: 94V-0/94V-2
- FEMALE MATERIAL: PU
- COLOR: BLACK

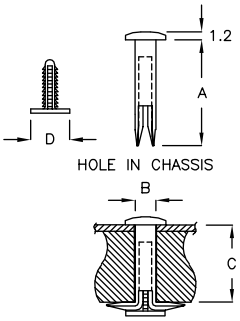

PART NO	A	B HOLE IN CHASSIS	C CHASSIS THICKNESS	D	PACKAGE
SRU-3	15.7	ø3.2	10.5~11.5	ø5.8	2000
SRU-3A	11.0	ø2.7	9.0~9.5	ø5.6	
SRU-3S	14.3	ø2.7	10.7~11.2	ø5.6	

铆钉 MOUNTING BUTTON 5-50-3

- MALE MATERIAL: NYLON 66(UL)
- FLAME CLASS: 94V-0/94V-2
- FEMALE MATERIAL: PU
- COLOR: BLACK

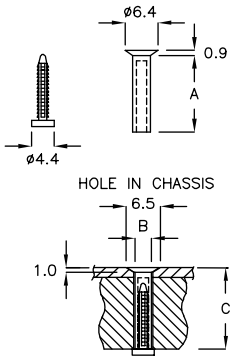

PART NO	A	B HOLE IN CHASSIS	C CHASSIS THICKNESS	PACKAGE
SRU-3F	15.1	ø3.5	16.2~16.8	2000

铆钉 MOUNTING BUTTON 5-50-4

- MALE MATERIAL: NYLON 66(UL)
- FLAME CLASS: 94V-0/94V-2
- FEMALE MATERIAL: PU
- COLOR: BLACK

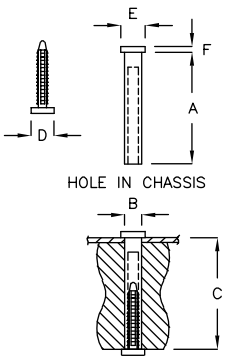

PART NO	A	B HOLE IN CHASSIS	C CHASSIS THICKNESS	D	E	F	PACKAGE
SRU-3C	18.6	ø3.4	18.8~19.5	ø4.4	ø4.7	1.1	2000
SRU-3H	26.0	ø4.5	26.2~26.8	ø5.4	ø6.0	1.1	
SRU-3J	21.0	ø4.4	21.2~21.8	ø6.0	ø6.0	1.0	
SRU-3K	17.6	ø4.2	17.8~18.4	ø7.4	ø7.4	1.2	
SRU-3M	15.3	ø4.5	15.8~16.2	ø7.4	ø7.4	1.2	
SRU-3ND	25.5	ø4.3	25.8~26.3	ø6.0	ø6.0	1.0	
SRU-3P	15.3	ø4.1	15.8~16.2	ø7.4	ø7.4	1.2	
SRU-3R	23.5	ø4.3	23.7~24.3	ø6.0	ø6.0	1.0	
SRU-3T	20.4	ø3.4	21.0~20.6	ø4.4	ø4.7	1.1	

返回图片索引

铆钉 MOUNTING BUTTON 5-51-1

- MALE MATERIAL: NYLON 66(UL)
- FEMALE MATERIAL: NYLON 66(UL)
- FLAME CLASS: 94V-0/94V-2
- COLOR: BLACK

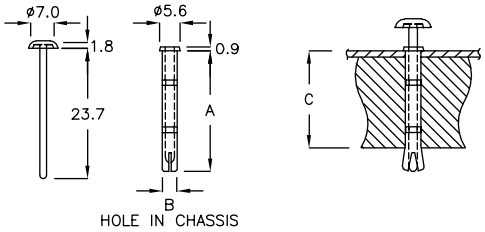

PART NO	A	B HOLE IN CHASSIS	C CHASSIS THICKNESS	PACKAGE
SR-4WY	23.5	ø4.0	20.5~21.5	2000

铆钉 MOUNTING BUTTON 5-51-2

- MALE MATERIAL: NYLON 66(UL)
- FEMALE MATERIAL: NYLON 66(UL)
- FLAME CLASS: 94V-0/94V-2
- COLOR: BLACK

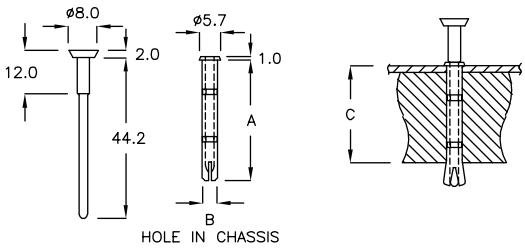

PART NO	A	B HOLE IN CHASSIS	C CHASSIS THICKNESS	PACKAGE
SR-4DK	33.2	ø4.0	29.0~30.0	2000

固定扣 SNAP LATCH 5-51-3

- MATERIAL: NYLON 66(UL)
- FLAME CLASS: 94V-0/94V-2
- COLOR: NATURAL

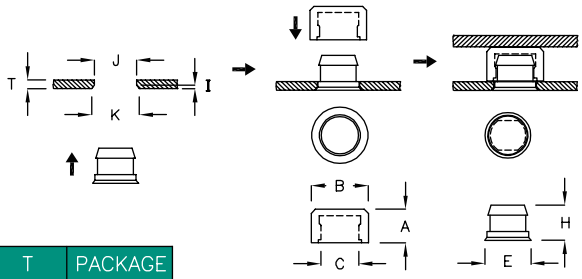

PART NO	A	B	C	E	H	I	J	K	T	PACKAGE
LH-013	4.0	ø6.9	ø4.5	ø5.6	4.2	0.6	5.1	5.8	1.2	2000
LH-015	9.4	ø8.9	ø4.5	ø5.6	4.2	0.5	5.1	5.8	1.0	
LH-016	5.1	ø6.9	ø4.5	ø5.6	4.2	0.6	5.1	5.8	1.2	
LH-017	3.6	ø6.9	ø4.5	ø5.6	3.5	0.6	5.1	5.8	1.2	
LH-018	3.4	ø6.9	ø4.5	ø5.6	3.5	1.3	5.1	5.8	1.9	
LH-019	3.8	ø6.9	ø4.6	ø5.4	4.2	0.55	4.9	5.6	1.1	
LH-021	3.0	ø6.9	ø4.6	ø5.6	3.4	0.6	5.15	5.8	1.2	
LH-024	2.9	ø6.9	ø4.5	ø5.6	2.75	0.45	5.15	6.05	0.8	
LH-026	4.0	ø6.9	ø4.5	ø5.6	3.9	0.6	5.1	5.8	0.8	
LH-027	3.3	ø6.9	ø4.6	ø5.95	3.3	0.66	5.1	6.6	1.0	

返回图片索引

固定扣 SNAP LATCH 5-52-1

- MALE MATERIAL: NYLON 66(UL)
- FEMALE MATERIAL: PC(UL)
- FLAME CLASS: 94V-2
- COLOR: BLACK

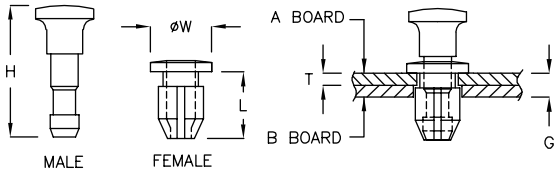

PART NO	T THICKNESS	G THICKNESS	A HOLE	B HOLE	L	W	H	PACKAGE
LH-01C	1.8~2.0	3.4~4.8	ø6.0	ø6.4	9.2	8.5	15.3	1000
LH-01D	2.1	4.1~4.8	ø6.0	ø6.4	9.2	8.5	18.2	
LH-01F	2.5	4.5~4.8	ø6.25	ø6.4	9.6	8.5	19.3	
LH-01M	1.6	2.7~3.6	ø6.1	ø6.4	8.6	8.5	17.5	
LH-01P	2.0	3.6~4.0	ø6.1	ø6.3	9.2	8.5	17.5	
LH-1	1.8~2.0	3.4~4.0	ø6.0	ø6.4	9.2	8.5	18.2	
LH-1L	3.9	7.7~8.2	ø6.0	ø6.4	11.3	8.5	20.2	
LH-2	1.5	3.8~4.6	ø7.6	ø8.0	9.9	10.8	18.2	500
LH-3	2.5	3.0~5.2	ø7.6	ø8.0	10.4	10.8	18.7	

固定扣 SNAP LATCH 5-52-2

- MALE MATERIAL: NYLON 66(UL)
- FEMALE MATERIAL: PC(UL)
- FLAME CLASS: 94V-2
- COLOR: BLACK

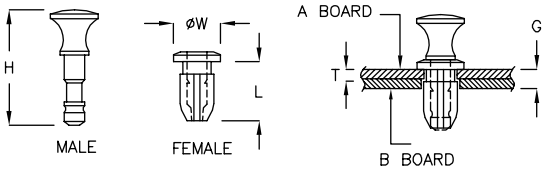

PART NO	T THICKNESS	G THICKNESS	A HOLE	B HOLE	L	W	H	PACKAGE
LH-01H	1.5~1.6	4.1~4.3	ø4.6	ø4.8	8.1	6.5	15.9	1000
LH-1RK	1.5~1.6	4.1~4.3	ø4.6	ø4.8	8.1	6.5	12.9	
LH-1Q	0.8	1.6~2.3	ø6.4	ø6.55	6.7	8.5	16.4	

固定扣 SNAP LATCH 5-52-3

- MALE MATERIAL: NYLON 66(UL)
- FEMALE MATERIAL: PC(UL)
- FLAME CLASS: 94V-2
- COLOR: NATURAL,BLACK

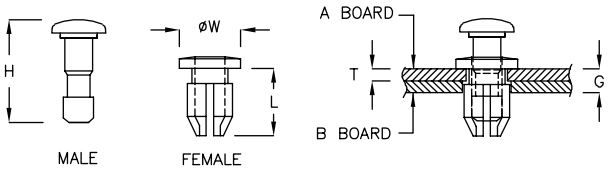

PART NO	T THICKNESS	G THICKNESS	A HOLE	B HOLE	L	W	H	PACKAGE
LH-01J	1.8~2.0	3.4~4.0	ø6.0	ø6.4	9.2	8.5	14.0	1000

返回图片索引

固定扣 SNAP LATCH 5-53-1

- MALE MATERIAL: NYLON 66(UL)
- FEMALE MATERIAL: PC(UL)
- FLAME CLASS: 94V-2
- COLOR: BLACK

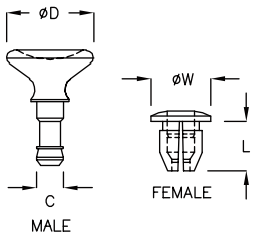

PART NO	T THICKNESS	G THICKNESS	A HOLE	B HOLE	C	D	L	W	PACKAGE
LH-2D	1.5	3.8~4.6	ø7.6	ø8.0	4.6	15.8	9.9	10.8	500
LH-2C	1.6	3.4~3.7	ø7.6	ø8.0	4.5	15.6	9.0	10.9	
LH-2T	1.6	3.4~3.7	ø7.6	ø8.0	4.6	15.8	9.0	10.9	
LH-04C	1.6	2.4~3.6	ø7.6	ø8.0	4.6	16.0	8.8	10.7	
LH-04D	2.4	3.5	ø7.5	ø8.0	5.0	16.0	9.9	10.5	

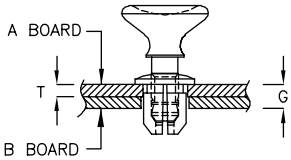

固定扣 SNAP LATCH 5-53-2

- MALE MATERIAL: NYLON 66(UL)
- FEMALE MATERIAL: PC(UL)
- FLAME CLASS: 94V-2
- COLOR: BLACK

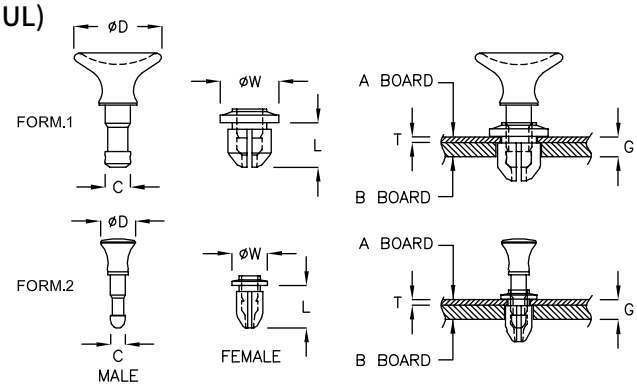

PART NO	T THICKNESS	G THICKNESS	A HOLE	B HOLE	C	D	L	W	FORM	PACKAGE
LH-04A	1.0	2.6~3.0	ø7.8	ø8.0	4.6	16.0	8.1	10.7	1	500
LH-4KP	1.0	2.8~3.8	ø4.7	ø4.8	2.7	6.35	7.7	6.5	2	1000

固定扣 SNAP LATCH 5-53-3

- MATERIAL: PC(UL)
- COLOR: BLACK

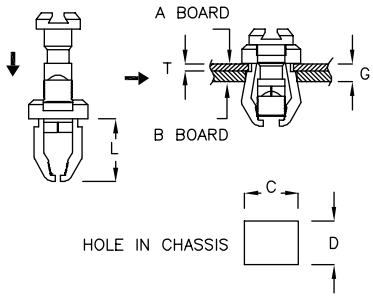

PART NO	T THICKNESS	G THICKNESS	A BOARD HOLE CxD	B BOARD HOLE CxD	L	PACKAGE
LH-009	1.2	2.4~2.7	9.0x9.0	9.5x9.0	12.2	200

固定扣 SNAP LATCH 5-53-4

- MALE MATERIAL: NYLON 66(UL)
- FEMALE MATERIAL: NYLON 66(UL)
- FLAME CLASS: 94V-0/94V-2
- COLOR: BLACK

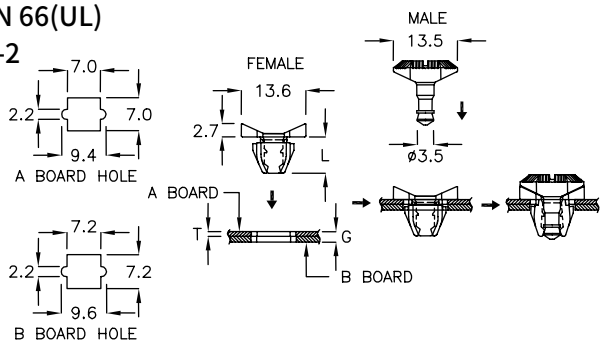

PART NO	T THICKNESS	G THICKNESS	L	PACKAGE
LHM-7JQ	1.0	2.2	7.7	500

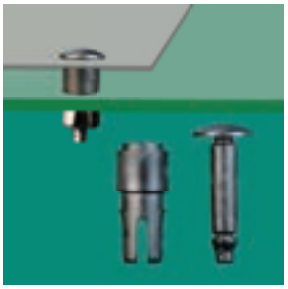

固定扣 SNAP LATCH 5-54-1

- MATERIAL: NYLON 66(UL)
- FLAME CLASS: 94V-0/94V-2
- COLOR: BLACK

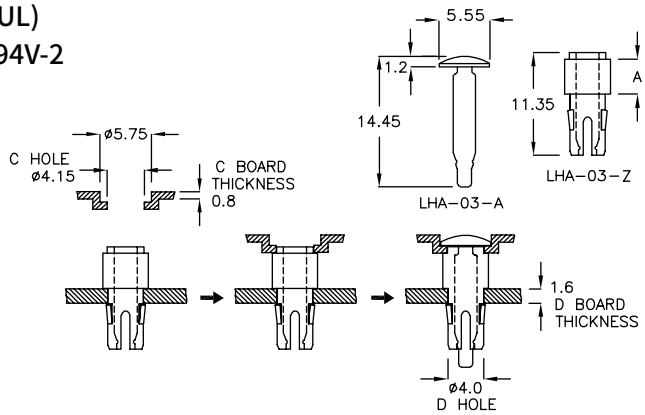

PART NO	A	PACKAGE
LHA-03	3.9	2000

固定扣 SNAP LATCH 5-54-2

- MATERIAL: NYLON 66(UL)
- FLAME CLASS: 94V-0/94V-2
- COLOR: BLACK

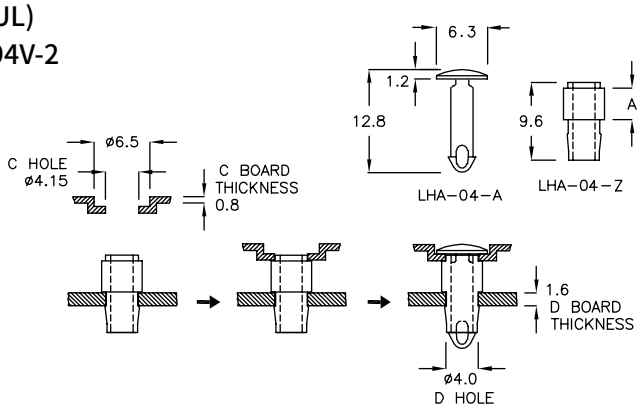

PART NO	A	PACKAGE
LHA-04	3.9	2000

P.C.B. 固定座 P.C.B. MOUNT 5-54-3

- MATERIAL: NYLON 66(UL)
- FLAME CLASS: 94V-0/94V-2
- COLOR: NATURAL

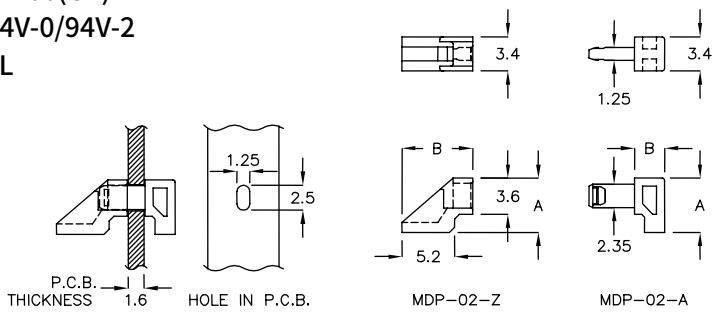

PART NO	A	B	PACKAGE
MDP-02-A	5.4	3.0	2000
MDP-02-Z	5.4	7.0	

固定扣 MOUNT 5-54-4

- MATERIAL: NYLON 66(UL)
- FLAME CLASS: 94V-0/94V-2
- COLOR: NATURAL

PART NO	A	B	C	PACKAGE
LHY-01	15.0	6.0	11.0	500

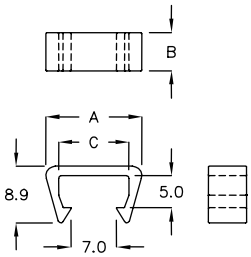

天线固定扣 MOUNT 5-54-5

- MATERIAL: NYLON 66(UL)
- FLAME CLASS: 94V-0/94V-2
- COLOR: NATURAL

PART NO	A	B	C	D	E	F	PACKAGE
LHY-12	12.0	7.0	9.2	6.6	7.0	2.4	2000
LHY-20	19.9	5.7	16.75	10.1	13.9	6.1	1000

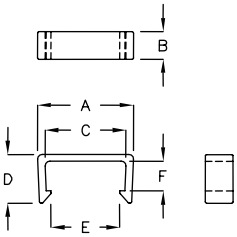

返回图片索引

固定扣 MOUNT 5-55-1

- MATERIAL: PC(UL)
- FLAME CLASS: 94V-2
- COLOR: CLEAR

PART NO	A	B	C	PACKAGE
LHG-06M	6.5	0.85	4.3	1000

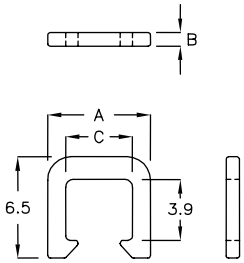

固定扣 NIFLATCH 5-55-2

- MATERIAL: NYLON 66(UL)
- FLAME CLASS: 94V-0/94V-2
- COLOR: NATURAL

PART NO	A	B	C	PACKAGE
LHJ-33C	35.0	7.1	33.0	500

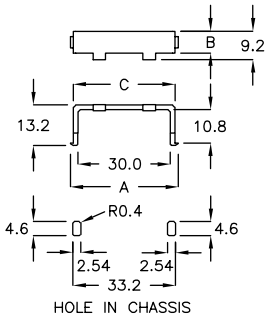

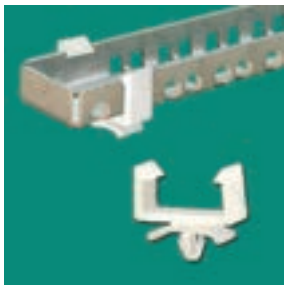

天线固定座 MOUNT 5-55-3

- MATERIAL: NYLON 66(UL)
- FLAME CLASS: 94V-0/94V-2
- COLOR: NATURAL

PART NO	A	B	T CHASSIS THICKNESS	PACKAGE
MRT-19Q	19.8	16.7	1.0~1.5	1000
MRT-19SK	19.8	16.7	1.5~2.0	

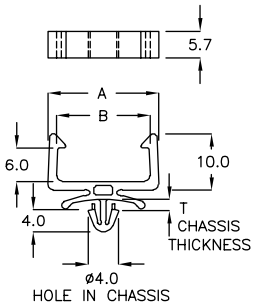

塑胶螺丝 PLASTIC SCREW 5-55-4

- MATERIAL: NYLON 66(UL)
- FLAME CLASS: 94V-0
- COLOR: NATURAL
- D: SCREW

PART NO	A	B	C	D	PACKAGE
S-2M10C	ø7.0	10.0	2.2	M2	2000

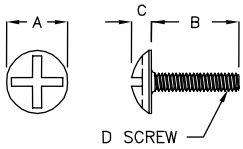

塑胶螺丝 PLASTIC SCREW 5-55-5

- MATERIAL: NYLON 66(UL)
- FLAME CLASS: 94V-2
- COLOR: NATURAL
- D: SCREW

PART NO	A	B	C	D	PACKAGE
S-2M07	ø4.0	6.9	1.6	M2.6	2000
S-2M8DK	ø4.0	8.2	1.8	M2.6	
S-2M9A	ø4.0	9.5	1.6	M2.6	
S-2M10	ø4.0	10.5	1.8	M2.6	

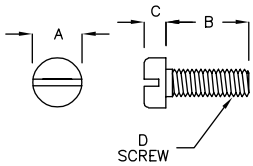

塑胶螺丝 PLASTIC SCREW 5-56-1

- MATERIAL: POM(UL)
- FLAME CLASS: 94HB
- COLOR: NATURAL
- D: SCREW

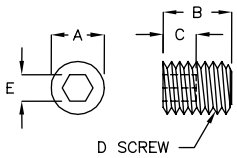

PART NO	A	B	C	D SCREW	E	PACKAGE
SU-304	ø2.9	4.0	2.5	M3	1.5	2000
SU-508	ø4.8	8.8	3.0	M5	2.5	

塑胶螺丝 PLASTIC SCREW 5-56-2

- MATERIAL: POM(UL)
- FLAME CLASS: 94HB
- COLOR: BLACK
- D: SCREW

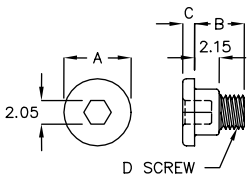

PART NO	A	B	C	D SCREW	PACKAGE
S-302Y	ø5.85	4.35	1.0	M3	2000

塑胶螺丝 PLASTIC SCREW 5-56-3

- MATERIAL: PC(UL)
- FLAME CLASS: 94V-2
- COLOR: CLEAR
- D: SCREW
- OPTIONAL MATERIAL: NYLON 66(UL)

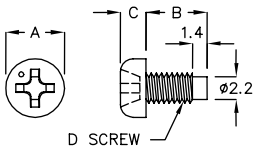

PART NO	A	B	C	D SCREW	PACKAGE
S-306A	ø5.7	5.9	2.5	M3	2000

塑胶螺丝 PLASTIC SCREW 5-56-4

- MATERIAL: PC(UL)
- FLAME CLASS: 94V-2
- COLOR: CLEAR
- D: SCREW

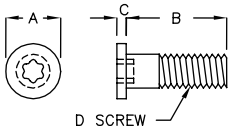

PART NO	A	B	C	D SCREW	PACKAGE
S-410W	ø6.5	9.9	1.1	M4	1000
S-412W	ø6.5	11.9	1.1	M4	

塑胶螺丝 PLASTIC SCREW 5-56-5

- MATERIAL: NYLON 66(UL)
- FLAME CLASS: 94V-0
- COLOR: CLEAR
- D: SCREW

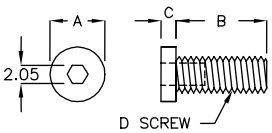

PART NO	A	B	C	D SCREW	PACKAGE
S-410Y	ø4.9	10.2	1.0	M4	1000

返回图片索引

塑胶螺丝 PLASTIC SCREW 5-57-1

- MATERIAL: NYLON 66(UL)
- FLAME CLASS: 94V-0
- COLOR: CLEAR, NATURAL
- D: SCREW

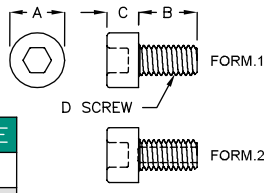

PART NO	MATERIAL	A	B	C	D	FORM	PACKAGE
SNT-406A	PC	ø7.0	6.0	4.0	M4	1	1000
SNT-816J	N66	ø13.0	16.0	8.0	M8	2	500

塑胶螺丝 PLASTIC SCREW 5-57-2

- MATERIAL: NYLON 66(UL)
- FLAME CLASS: 94V-2
- COLOR: NATURAL
- D: SCREW

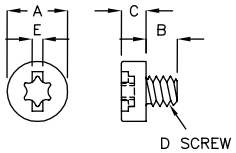

PART NO	A	B	C	D SCREW	E	PACKAGE
SU6A-3A	ø6.8	3.5	2.8	#6-32	1.2	2000
S-6M2A	ø8.3	2.2	2.2	M6	1.0	

塑胶螺丝 PLASTIC SCREW 5-57-3

- MATERIAL: NYLON 66(UL)
- FLAME CLASS: 94V-2
- COLOR: CLEAR
- D: SCREW

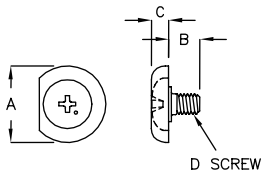

PART NO	A	B	C	D SCREW	PACKAGE
S-304F	ø11.0	4.45	2.5	M3	1000

塑胶螺丝 PLASTIC SCREW 5-57-4

- MATERIAL: NYLON 66(UL)
- FLAME CLASS: 94V-2
- COLOR: NATURAL
- MATERIAL: PPS(UL)
- FLAME CLASS: 94V-0
- COLOR: BLACK
- D: SCREW

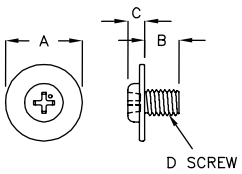

PART NO	MATERIAL	A	B	C	D SCREW	PACKAGE
S-4M5P	N66/PPS	ø18.0	5.0	3.0	M4	1000
S-5M6T	N66/PPS	ø18.0	6.0	3.5	M5	
S-6M8F	N66	ø18.0	8.0	4.0	M6	

塑胶螺丝 PLASTIC SCREW 5-57-5

- MATERIAL: NYLON 66(UL)
- FLAME CLASS: 94V-2
- COLOR: NATURAL
- D: SCREW

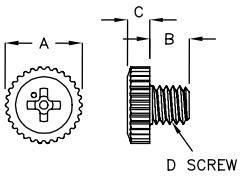

PART NO	A	B	C	D SCREW	PACKAGE
S-608KT	ø11.5	8.0	3.3	M6	1000
S-608W	ø11.5	5.9	3.3		

塑胶螺丝 PLASTIC SCREW 5-58-1

- MATERIAL: PEEK(UL)、PPS(UL)
- FLAME CLASS: 94V-0
- COLOR: NATURAL, BLACK
- D: SCREW

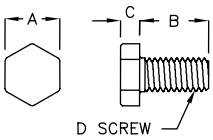

PART NO	MATERIAL	A	B	C	D SCREW	PACKAGE
SQA-406	PPS	7.0	6.0	2.4	M4	1000
SQA-408	PPS	7.0	8.0	2.4		
SQA-410	PEEK	7.0	10.0	2.4		
SQA-412	PPS	7.0	12.0	2.4		
SQA-508	PPS	8.0	8.0	2.8	M5	
SQA-510	PEEK	8.0	10.0	2.8		
SQA-512	PPS	8.0	12.0	2.8		
SQA-515	PPS	8.0	15.0	2.8		
SQA-610	PPS	8.0	10.0	2.8	M6	
SQA-612	PEEK	8.0	12.0	2.8		

塑胶螺丝 PLASTIC SCREW 5-58-2

- MATERIAL: NYLON 66(UL)
- FLAME CLASS: 94V-2
- COLOR: NATURAL
- D: SCREW

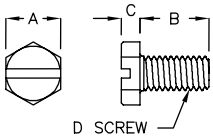

PART NO	A	B	C	D SCREW	PACKAGE
SUN4-406	4.7	6.35	1.35	#4-40	1000
SUN4-409	4.7	9.5	1.35		
SUN4-412	4.7	12.7	1.35		
SUN4-419	4.7	19.0	1.35		
SUN4-425	4.7	25.4	1.35		
SUN6-606	6.2	6.35	2.25	#6-32	
SUN6-609	6.2	9.5	2.25		
SUN6-612	6.2	12.7	2.25		
SUN6-619	6.2	19.0	2.25		
SUN6-625	6.2	25.4	2.25		

返回图片索引

塑胶螺丝 PLASTIC SCREW

- MATERIAL: PC(UL), NYLON 66(UL)
- FLAME CLASS: 94V-2
- COLOR: CLEAR, NATURAL
- MATERIAL: PEEK(UL), PPS(UL)
- COLOR: NATURAL, BLACK
- D: SCREW

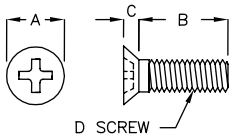

PART NO	MATERIAL	A	B	C	D SCREW	PACKAGE
SF-103BD	PEEK	ø3.2	2.0	1.2	M1.6	1000
SF-103NT	PEEK	ø3.2	2.5	1.2		
SF-104RM	PEEK	ø3.2	3.0	1.2		
SF-104WK	PEEK	ø3.2	3.5	1.2		
SF-105DP	PEEK	ø3.2	4.0	1.2		
SF-205	PC/N66	ø3.8	3.3	1.2	M2	1000
SF-304	N66	ø6.0	2.3	1.7	M3	2000
SF-306	PC/N66	ø5.4	4.6	1.4	M3	1000
SF-308	PC/N66	ø5.8	6.4	1.5		
SF-310	PC/N66	ø5.5	9.0	1.2		
SF-312	PC/N66	ø5.1	10.8	1.4		
SF-314	PC	ø5.6	12.8	1.4		
SF-406	PC	ø7.4	3.8	2.4	M4	1000
SF-408	PC/N66	ø7.4	5.8	2.4		
SF-410	PC	ø7.6	7.9	2.1	M4	500
SF-412	PC	ø7.4	9.8	2.4	M4	1000
SF-414	PC/PPS	ø7.4	11.6	2.4		
SF-416	PC/N66	ø7.4	13.8	2.4		
SF-417	PC/PPS	ø7.4	14.6	2.4		
SF-418	PC/PPS	ø7.4	15.6	2.4		
SF-511	PC	ø9.2	8.2	2.5	M5	
SF-513	PC	ø9.1	10.2	2.5		
SF-515	PC	ø9.2	12.2	2.5		
SF-517	PC/PPS	ø9.1	14.5	2.5		
SF-518	PC/PPS	ø9.1	15.5	2.5		
SF-520	PC/PPS	ø9.1	20.0	2.5		
SN4-12	PC/N66	ø5.6	10.55	2.1	#4-40	

塑胶螺丝 PLASTIC SCREW 5-60-1

- MATERIAL: PC(UL), NYLON 66(UL)
- FLAME CLASS: 94V-2
- COLOR: CLEAR, NATURAL
- MATERIAL: PEEK(UL), PPS(UL), PEI
- COLOR: NATURAL, BLACK
- D: SCREW

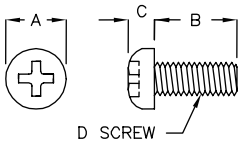

PART NO	MATERIAL	A	B	C	D SCREW	PACKAGE
S-102LM	PEEK	ø3.0	2.0	1.2	M1.6	2000
S-102SY	PEEK	ø3.0	2.5	1.2		
S-103FC	PEEK	ø3.8	3.17	1.2		
S-103A	PC/N66	ø3.8	3.3	1.2		
S-103YJ	PEEK	ø3.0	3.5	1.2		
S-104KP	PEEK	ø3.0	4.0	1.2		
S-104QH	PEEK	ø3.8	4.76	1.2		
S-105K	PC/N66	ø3.0	4.95	1.0		
S-106	PC/N66	ø3.8	6.0	1.2		
S-107WK	PEEK	ø3.8	7.94	1.2		
S-2M3P	PC	ø3.5	3.0	1.3	M2.0	
S-2M4K	PC/N66	ø6.0	4.5	2.5		
S-2M6A	PC/N66	ø3.5	6.5	1.3		
S-2M08	PC/N66	ø3.5	8.0	1.3		
S-2M10A	PC	ø5.7	10.0	2.5		
S-2AM11	PC/N66	ø4.3	11.0	1.6	M2.5	
S-2M05	PC/N66	ø5.7	5.0	2.8	M2.6	
S-2M06	PC/N66	ø5.7	6.0	2.8		
S-304C	PC/N66	ø5.7	4.0	2.5	M3	
S-305A	PC/N66	ø5.7	5.0	2.5	M3	1000
S-306MK	PC/N66	ø5.7	6.0	1.2		
S-306	PC/N66	ø5.7	6.3	2.5		
S-308	PC/N66	ø5.7	8.0	2.5		
S-310	PC/N66	ø5.7	10.0	2.5		
S-312	PC/N66	ø5.7	12.1	2.5		
S-315	PC/N66	ø5.7	15.1	2.5		
S-318FK	PEI	ø5.7	18.0	2.5		
S-318	PC	ø5.7	18.3	2.5		
S-320	PEI	ø5.7	20.0	2.5		

PART NO	MATERIAL	A	B	C	D SCREW	PACKAGE
S-406	PC/N66	ø7.4	6.3	2.7	M4	1000
S-408	PC/N66	ø7.4	8.0	2.8		
S-410	PC/N66	ø7.5	10.2	2.6		
S-412	PC/N66	ø7.4	12.2	2.7		
S-414	PC/N66	ø7.5	14.2	2.7		
S-416	PC/N66	ø7.4	16.2	2.7		
S-420	PC/N66	ø7.4	20.0	2.8		
S-425	PC/PPS	ø7.5	25.0	2.7		
S-510	PC/N66	ø9.1	10.2	3.5	M5	
S-512	PC/N66	ø9.1	12.2	3.5		
S-516	PC	ø9.1	16.1	3.5		
S-520	PC	ø9.1	20.2	3.6		
S-525	PC/PPS	ø9.1	25.0	3.5		
S-530	PC/PPS	ø9.1	30.0	3.5		
S-605	PC/N66	ø9.0	4.1	3.3	M6	
S-606	PC/PPS	ø9.0	6.0	3.3		
S-608	PC/PPS	ø9.0	8.0	3.3		
S-610	PC/PPS	ø9.0	10.0	3.3		
S-612	PC/PPS	ø9.0	12.0	3.3		
S-615	PC/PPS	ø9.0	15.0	3.3		
S-618	PC/PPS	ø9.0	18.0	3.3		
S-620	PC/PPS	ø9.0	20.0	3.3		
SU2-12A	PC/N66	ø4.2	12.7	1.5	#2-56	2000
SU6-06	PC/N66	ø6.9	6.4	2.5	#6-32	

塑胶螺丝 PLASTIC SCREW 5-60-2

- MATERIAL: NYLON 66(UL)
- FLAME CLASS: 94V-2
- COLOR: NATURAL
- MATERIAL: PPS(UL)
- FLAME CLASS: 94V-0
- COLOR: BLACK
- D: SCREW

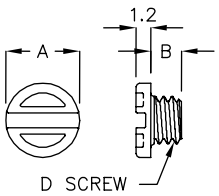

PART NO	MATERIAL	A	B	D SCREW	PACKAGE
S-4M2D	PPS	ø6.0	2.5	M4	2000
S-5M2K	PPS	ø7.0	2.8	M5	
S-6M02	N66	ø8.0	2.1	M6	
S-8M03	PPS	ø10.0	3.0	M8	

返回图片索引

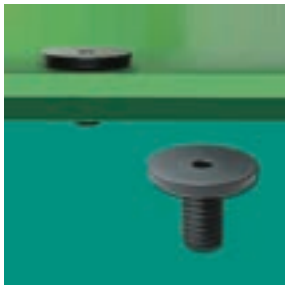

塑胶螺丝 PLASTIC SCREW 5-61-1

- MATERIAL: ABS+PC
- COLOR: BLACK
- D: SCREW

PART NO	A	B	C	D SCREW	PACKAGE
S-610TY	ø15.6	10.0	2.5	M6	1000

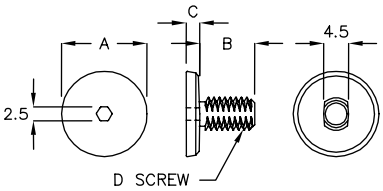

塑胶螺丝 PLASTIC SCREW 5-61-2

- MATERIAL: NYLON 66(UL)
- FLAME CLASS: 94V-0
- COLOR: NATURAL
- D: SCREW

PART NO	A	B	C	D SCREW	PACKAGE
S-7M06	8.8	6.8	1.5	M7	1000

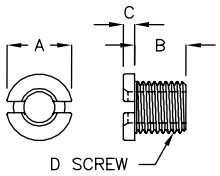

塑胶螺丝 PLASTIC SCREW 5-61-3

- MATERIAL: NYLON 66(UL)
- FLAME CLASS: 94V-2
- COLOR: BLACK
- D: SCREW

PART NO	A	B	C	D SCREW	PACKAGE
S-318C	ø9.0	10.0	2.0	M3	1000
S-423C	ø10.4	15.0	5.0	M4	
S-523C	ø10.6	15.1	5.0	M5	
S-626C	ø10.5	18.0	5.0	M6	

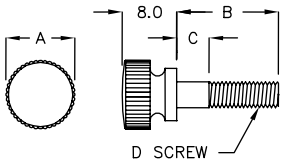

螺丝 SCREW 5-61-4

- MATERIAL: ABS+PC
- COLOR: GRAY
- SCREW MATERIAL: ALLOY BRASS
- D: SCREW

PART NO	A	B	C	D SCREW	PACKAGE
SW4-08	ø8.3	8.0	6.4	M4	500

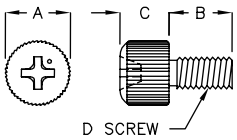

螺丝 SCREW 5-61-5

- MATERIAL: ABS+PC
- COLOR: GRAY
- SCREW MATERIAL: ALLOY BRASS
- D: SCREW

PART NO	A	B	C	D SCREW	PACKAGE
SW5-16	ø12.8	10.3	5.7	M5	500

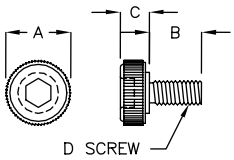

螺旋塞环 SCREW PLUG 5-62-1

- MATERIAL: NYLON 66 (UL)
- FLAME CLASS: 94V-2
- COLOR: BLACK
- D: SCREW

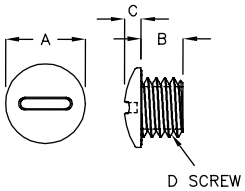

PART NO	A	B	C	D SCREW	PACKAGE
SM-UNEF58	ø23.5	8.0	3.5	5/8"-24UNEF	200
SM-PF12	ø26.3	8.1	3.5	PF1/2"	
SM-M8	ø12.0	8.5	2.4	M8	1000
SM-M10	ø14.0	8.5	2.4	M10	
SM-M12	ø16.15	8.5	3.35	M12	
SM-M12AC	ø16.15	8.5	3.35	M12	
SM-M16	ø20.2	8.0	3.45	M16	200
SM-M20	ø25.5	7.95	3.6	M20	
SM-M20A	ø25.5	6.0	3.6	M20	
SM-M25	ø30.3	8.45	3.55	M25	

防水螺旋塞环 WATERPROOF PLUG 5-62-2

- MATERIAL: NYLON 66 (UL)
- FLAME CLASS: 94V-2
- COLOR: BLACK
- D: SCREW
- WATERPROOF PROVE: IP67

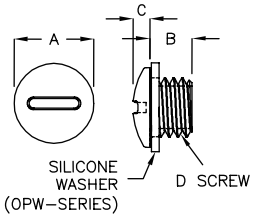

PART NO	A	B	C	D SCREW	ASSEMBLE WITH P.G. PART	PACKAGE
SM-UNEF58-X	ø23.5	8.0	3.5	5/8"-24UNEF	WSR-22AP	200
SM-PF12-X	ø26.3	8.1	3.5	PF1/2"	OPW-20	
SM-M8-X	ø12.0	8.5	2.4	M8	OPW- A	1000
SM-M10-X	ø14.0	8.5	2.4	M10	OPW-9CD	
SM-M12-X	ø16.15	8.5	3.35	M12	WSR-11RM	
SM-M12AC-X	ø16.15	8.5	3.35	M12	WSR-11RM	
SM-M16-X	ø20.2	8.0	3.45	M16	OPW-15D	200
SM-M20-X	ø25.5	7.95	3.6	M20	OPW-19M	
SM-M20A-X	ø25.5	6.0	3.6	M20	OPW-19M	
SM-M25-X	ø30.3	8.45	3.55	M25	OPW-24A	

ASSEMBLE WITH P.G. PART OPW-SERIES, WSR-SERIES (Page 8-27-5, 8-28-2)

防水螺旋塞环 SCREW PLUG 5-62-3

- MATERIAL: NYLON 66 (UL)
- FLAME CLASS: 94V-2
- COLOR: NATURAL
- D: SCREW

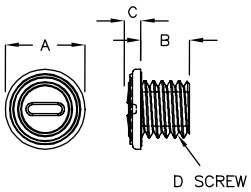

PART NO	A	B	C	D SCREW	PACKAGE
SM-M10TC	ø14.0	8.5	2.4	M10	1000

返回图片索引

防水螺旋塞环 WATERPROOF PLUG 5-63-1

- MATERIAL: NYLON 66 (UL)
- FLAME CLASS: 94V-2
- COLOR: NATURAL
- D: SCREW
- WATERPROOF PROVE: IP67

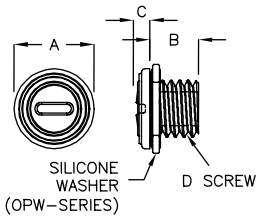

PART NO	A	B	C	D SCREW	ASSEMBLE WITH P.G. PART	PACKAGE
SM-M10TC-X	ø14.0	8.5	2.4	M10	OPW-9CD	1000

ASSEMBLE WITH P.G. PART OPW-SERIES (Page 8-27-5)

塑胶螺丝 PLASTIC SCREW 5-63-2

- MATERIAL: NYLON 66(UL)
- FLAME CLASS: 94V-0
- COLOR: NATURAL
- D: SCREW

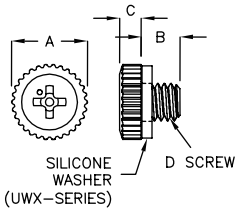

PART NO	A	B	C	D SCREW	ASSEMBLE WITH P.G. PART	PACKAGE
S-608KT-X	ø11.5	8.0	3.3	M6	UWX-11	1000
S-608W-X	ø11.5	5.9	3.3			

ASSEMBLE WITH P.G. PART UWX-SERIES (Page 8-28-2)

塑胶螺帽 PLASTIC NUT 5-63-3

- MATERIAL: PC(UL)
- FLAME CLASS: 94V-2
- COLOR: NATURAL
- MATERIAL: NYLON 66(UL)
- FLAME CLASS: 94V-0/94V-2
- COLOR: NATURAL,BLACK
- D: SCREW

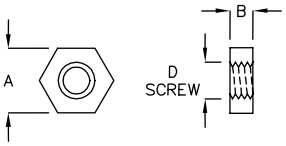

PART NO	MATERIAL	A	B	D SCREW	PACKAGE
S-2M	PC/N66	5.0	2.4	M2.6	1000
S-2MD	PC	5.0	1.9	M2.6	
S-3M	PC/N66	5.4	2.5	M3	
S-4M	PC/N66	8.0	3.2	M4	
S-5M	PC/N66	8.0	4.4	M5	
S-7M	N66	10.2	3.95	M7x0.75	
S-8MG	N66	13.0	4.8	M8	500
S-12M	N66	18.0	5.1	M12x1.5	1000
UN4-40AN	N66	4.75	2.54	#4-40	
UN4-40DK	N66	6.35	2.54	#4-40	
UN6-32	PC/N66	6.2	2.5	#6-32	
UN6-32BP	N66	6.35	3.05	#6-32	
UN6-32RT	N66	7.75	3.05	#6-32	

返回图片索引

塑胶螺帽 PLASTIC NUT 5-64-1

- MATERIAL: NYLON 66(UL)
- FLAME CLASS: 94V-2
- COLOR: NATURAL
- D: SCREW

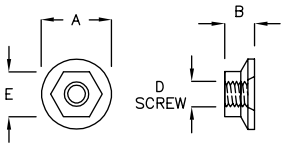

PART NO	A	B	D	E	PACKAGE
S-3MF	ø8.5	3.2	M3	5.4	1000
S-4MF	ø10.0	4.0	M4	6.9	
S-5MF	ø11.0	5.0	M5	7.9	

塑胶螺帽 PLASTIC NUT 5-64-2

- MATERIAL: PC(UL)
- FLAME CLASS: 94V-2
- COLOR: CLEAR
- D: SCREW

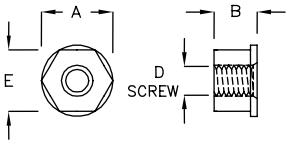

PART NO	A	B	D	E	PACKAGE
UN10-24	ø10.55	6.35	#10-24	9.15	1000

塑胶螺帽 PLASTIC NUT 5-64-3

- MATERIAL: NYLON 66(UL)
- FLAME CLASS: 94V-2
- COLOR: NATURAL
- D: SCREW

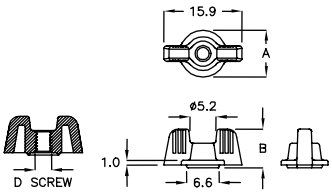

PART NO	A	B	D	PACKAGE
SMA4-40C	ø9.55	7.9	#4-40	1000
SMA6-32F	ø9.55	7.9	#6-32	

塑胶螺帽 PLASTIC NUT 5-64-4

- MATERIAL: NYLON 66(UL)
- FLAME CLASS: 94V-2
- COLOR: NATURAL
- D: SCREW

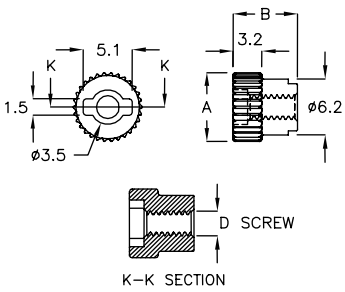

PART NO	A	B	D	PACKAGE
SMC4-40D	ø7.6	7.1	#4-40	1000

返回图片索引

06 如何使用胶带程序

准备安装表面：

为了获得最佳黏着效果，请将胶带固定座贴在清洁、干燥、无油的表面上。
贴上前请务必清洁黏合表面，请用水 1:1 稀释的异丙醇混合液擦拭表面后，待表面完全干燥。

如何正确安装胶带：

若要正确安装及使用胶带固定座，请先移除离型纸后将固定座放置到位，平均施以约 15psi(1.05kg/cm^2) 之压力按压以获得有效贴合。

理想施工温度：

温度介于在 15°C至 38°C之间，勿低于 10°C。

1) 用干净的布并用稀释的异丙醇混合液擦拭清洁表面

2) 待表面完全干燥

3) 请先移除离型纸后将其固定座放置到位 , 平均施以 15psi(1.05Kg/cm^2) 之压力按压以获得有效贴合，温度介于在 15°C至 38°C之间，勿低于 10°C

4) 等待一段时间直至贴合强度稳定

胶带保存：

胶带固定座储存环境为 21°C和 50%相对湿度，避免因未确实密封及开放包装，会有背胶黄化现象。
如果储存条件（环境）与建议条件不同，可能会缩短保质期并导致黏合强度下降。
我们持续提高产品可靠性，但错误使用可能会造成损坏，如果您对产品的正确使用有任何疑问 / 疑虑，请咨询我们。

06

线材固定
CABLE CLAMPS

线材隔离
SADDLES


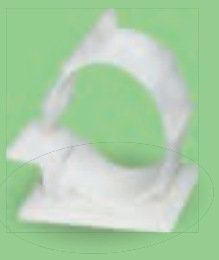




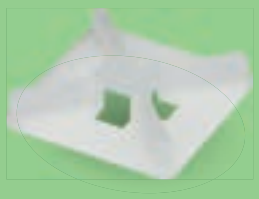


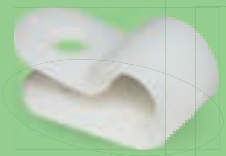


电线固定板 WIRE MOUNT 6-2-1

- MATERIAL: NYLON 66(UL)
- FLAME CLASS: 94V-0/94V-2
- COLOR: NATURAL
- ADHESIVE TAPE: 3M

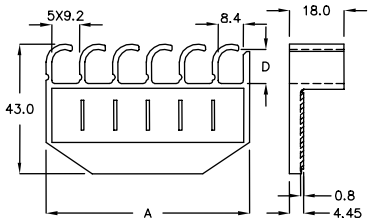

PART NO	A	D	PACKAGE
6FW−10	67.2	11.0	50

电线固定座 WIRE MOUNT 6-2-2

- MATERIAL: NYLON 66(UL)
- FLAME CLASS: 94V-0/94V-2
- COLOR: NATURAL
- ADHESIVE TAPE: 3M

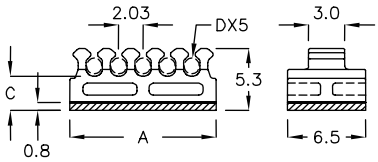

PART NO	A	C	D	PACKAGE
CMX−12A	12.2	3.0	ø1.3	2000

电线固定座 WIRE MOUNT 6-2-3

- MATERIAL: NYLON 66(UL)
- FLAME CLASS: 94V-0/94V-2
- COLOR: NATURAL
- ADHESIVE TAPE: 3M

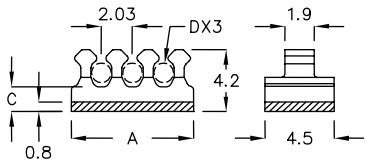

PART NO	A	C	D	PACKAGE
CMR−8D	8.1	1.8	ø1.3	2000

电线固定座 WIRE MOUNT 6-2-4

- MATERIAL: NYLON 66(UL)
- FLAME CLASS: 94V-0/94V-2
- COLOR: BLACK
- ADHESIVE TAPE: 3M

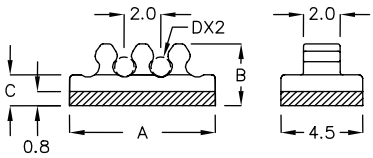

PART NO	A	B	C	D	PACKAGE
CMR−6TH	6.1	4.2	1.8	ø1.3	2000
CMR−8AT	8.0	3.4	1.7	ø1.0	
CMR−8KF	8.1	4.2	1.8	ø1.38	

电线固定座 WIRE MOUNT 6-2-5

- MATERIAL: NYLON 66(UL)
- FLAME CLASS: 94V-0/94V-2
- COLOR: NATURAL
- ADHESIVE TAPE: 3M

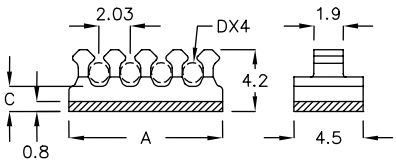

PART NO	A	C	D	PACKAGE
CMR−10FK	10.0	1.8	ø1.3	2000

电线固定座 WIRE MOUNT 6-3-1

- MATERIAL: NYLON 66(UL)
- FLAME CLASS: 94V-0/94V-2
- COLOR: NATURAL
- ADHESIVE TAPE: 3M

PART NO	A	C	D	PACKAGE
CMR-12QW	12.0	1.8	ø1.3	2000

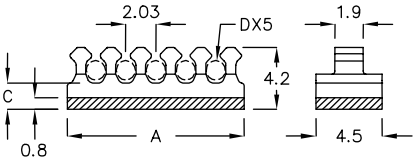

电线固定座 WIRE MOUNT 6-3-2

- MATERIAL: NYLON 66(UL)
- FLAME CLASS: 94V-0/94V-2
- COLOR: NATURAL
- ADHESIVE TAPE: 3M

PART NO	A	B	C	PACKAGE
CMY-10CT	4.5	9.45	6.85	1000
CMY-10A	4.5	10.2	7.6	

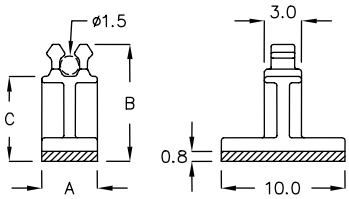

束线固定板 ADHESIVE BACKED MOUNT 6-3-3

- MATERIAL: NYLON 66(UL)
- FLAME CLASS: 94V-0/94V-2
- COLOR: NATURAL
- ADHESIVE TAPE: 3M

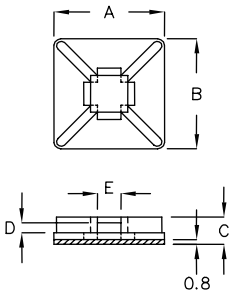

PART NO	A	B	C	D	E	ASSEMBLE WITH P.G. PART	PACKAGE
AB-2S	13.0	13.0	4.8	2.1	2.8	YJ-80, YJ-90, YJ-98 YJ-100, YJ-120, YJ-142S YJ-160, YJ-203S	1000
AB-2	19.0	19.0	4.7	1.7	3.8		500

ASSEMBLE WITH P.G PART YJ-SERIES (Page 12-2-1)
MUST BE ASSEMBLED WITH CABLE TIE, WIDTH UP TO 2.6mm

束线固定板 ADHESIVE BACKED MOUNT 6-3-4

- MATERIAL: NYLON 66(UL)
- FLAME CLASS: 94V-0/94V-2
- COLOR: NATURAL
- ADHESIVE TAPE: 3M
- ALSO CAN BE FASTENED WITH M3 COUNTERSUNK SCREW

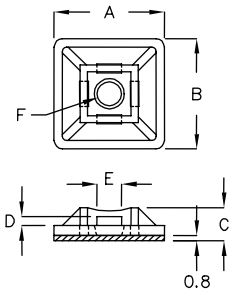

PART NO	A	B	C	D	E	F	ASSEMBLE WITH P.G. PART	PACKAGE
AB-3S	19.8	19.8	6.4	1.6	4.3	ø4.4	YJ-80, YJ-90, YJ-98 YJ-100, YJ-120, YJ-142 YJ-142S, YJ-156, YJ-160 YJ-203, YJ-203S	500
AB-3	28.3	28.3	6.7	1.8	5.0	ø4.8		200

ASSEMBLE WITH P.G PART YJ-SERIES (Page 12-2)
MUST BE ASSEMBLED WITH CABLE TIE, WIDTH UP TO 3.6mm

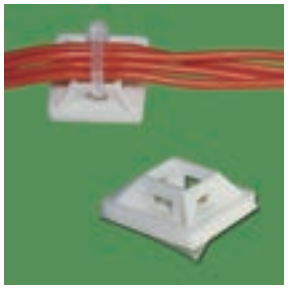

束线固定板
ADHESIVE BACKED MOUNT 6-4-1

- MATERIAL: NYLON 66(UL)
- FLAME CLASS: 94V-0/94V-2
- COLOR: NATURAL
- ADHESIVE TAPE: 3M
- ALSO CAN BE FASTENED WITH #6-32 COUNTERSUNK SCREW

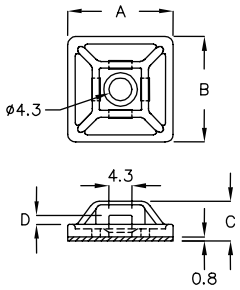

PART NO	A	B	C	D	ASSEMBLE WITH P.G. PART	PACKAGE
AB-20PJ	19.8	19.8	7.4	1.7	YJ-80, YJ-90, YJ-98 YJ-100, YJ-120, YJ-142 YJ-142S, YJ-156, YJ-160 YJ-203, YJ-203S	500

ASSEMBLE WITH P.G PART YJ-SERIES (Page 12-2)
MUST BE ASSEMBLED WITH CABLE TIE, WIDTH UP TO 3.6mm

束线固定板
ADHESIVE BACKED MOUNT 6-4-2

- MATERIAL: NYLON 66(UL)
- FLAME CLASS: 94V-0/94V-2
- COLOR: NATURAL
- ADHESIVE TAPE: 3M
- ALSO CAN BE FASTENED WITH M2 or M3 SCREW

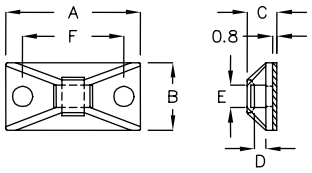

PART NO	A	B	C	D	E	F	WITH SCREW	ASSEMBLE WITH P.G. PART	PACKAGE
AB-3R	15.0	9.0	5.3	1.95	3.8	10.5	M2	YJ-80, YJ-90, YJ-98 YJ-100, YJ-120, YJ-142 YJ-142S, YJ-156, YJ-160 YJ-203, YJ-203S	500
AB-3P	24.0	12.0	5.3	1.95	4.0	18.0	M3		

ASSEMBLE WITH P.G PART YJ-SERIES (Page 12-2)
MUST BE ASSEMBLED WITH CABLE TIE, WIDTH UP TO 3.6mm

束线固定板
ADHESIVE BACKED MOUNT 6-4-3

- MATERIAL: NYLON 66(UL)
- FLAME CLASS: 94V-0/94V-2
- COLOR: NATURAL
- ADHESIVE TAPE: 3M

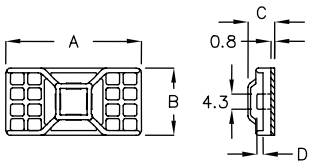

PART NO	A	B	C	D	ASSEMBLE WITH P.G. PART	PACKAGE
AB-20QW	39.6	19.8	7.4	1.7	YJ-80, YJ-90, YJ-98, YJ-100 YJ-120, YJ-142, YJ-142S, YJ-156 YJ-160, YJ-203, YJ-203S	200

ASSEMBLE WITH P.G PART YJ-SERIES (Page 12-2)
MUST BE ASSEMBLED WITH CABLE TIE, WIDTH UP TO 3.6mm

束线固定板 ADHESIVE BACKED MOUNT 6-5-1

- MATERIAL: NYLON 66(UL)
- FLAME CLASS: 94V-0/94V-2
- COLOR: NATURAL
- ADHESIVE TAPE: 3M
- ALSO CAN BE FASTENED WITH M3 SCREW

NEW

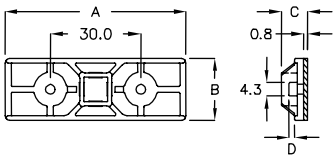

	PART NO	A	B	C	D	ASSEMBLE WITH P.G. PART	PACKAGE
★	ABT-60L	60.0	20.0	8.2	1.8	YJ-80, YJ-90, YJ-98, YJ-100 YJ-120, YJ-142, YJ-142S, YJ-156 YJ-160, YJ-203, YJ-203S	200

ASSEMBLE WITH P.G PART YJ-SERIES (Page 12-2)
MUST BE ASSEMBLED WITH CABLE TIE, WIDTH UP TO 3.6mm

压线座 WIRE CLAMP 6-5-2

- MATERIAL: NYLON 66(UL)
- FLAME CLASS: 94V-0/94V-2
- COLOR: NATURAL
- ADHESIVE TAPE: 3M

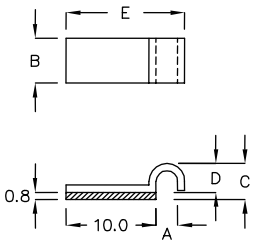

PART NO	A	B	C	D	E	PACKAGE
FS-05	2.4	5.0	4.1	3.2	13.2	2000
FS-12PT	1.5	5.0	3.2	2.4	12.3	

压线座 WIRE CLAMP 6-5-3

- MATERIAL: NYLON 66(UL)
- FLAME CLASS:94V-0/94V-2
- COLOR: NATURAL
- ADHESIVE TAPE: 3M

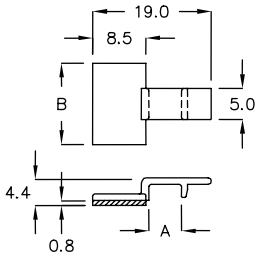

PART NO	A	B	PACKAGE
FCP-05	5.2	13.0	500

隔离束线座 WIRE SADDLE 6-5-4

- MATERIAL: NYLON 66(UL)
- FLAME CLASS:94V-0/94V-2
- COLOR: NATURAL
- ADHESIVE TAPE: 3M

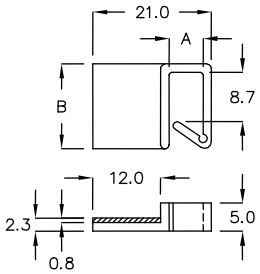

PART NO	A	B	PACKAGE
AB-5	6.0	15.0	500

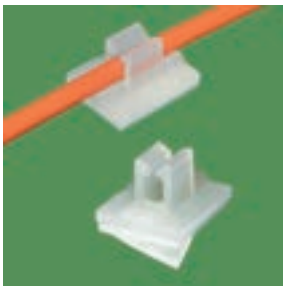

隔离束线座 WIRE SADDLE 6-5-5

- MATERIAL: NYLON 66(UL)
- FLAME CLASS:94V-0/94V-2
- COLOR: NATURAL
- ADHESIVE TAPE: 3M

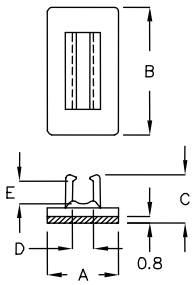

PART NO	A	B	C	D	E	PACKAGE
FU-10AK	8.5	10.0	6.1	2.1	2.3	2000
FU-10DF	8.5	10.0	6.9	3.1	3.15	
FU-15A	8.5	15.2	5.8	2.5	2.7	

隔离束线座 WIRE SADDLE 6-6-1

- MATERIAL: NYLON 66(UL)
- FLAME CLASS: 94V-0/94V-2
- COLOR: NATURAL
- ADHESIVE TAPE: 3M

PART NO	A	B	C	PACKAGE
FUS-10C	6.5	10.5	4.5	2000

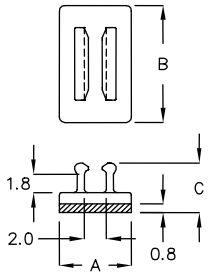

电线固定座 WIRE MOUNT 6-6-2

- MATERIAL: NYLON 66(UL)
- FLAME CLASS: 94V-0/94V-2
- COLOR: NATURAL
- ADHESIVE TAPE: 3M

PART NO	A	B	E	PACKAGE
FUM-12	11.25	8.0	9.03	2000
FUM-12FD	13.1	8.0	10.45	

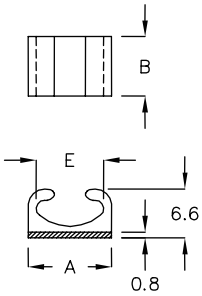

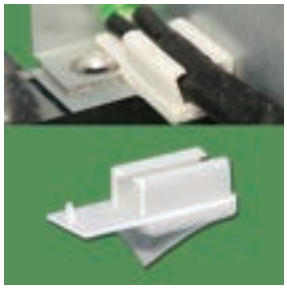

隔离束线座 WIRE SADDLE 6-6-3

- MATERIAL: NYLON 66(UL)
- FLAME CLASS: 94V-0/94V-2
- COLOR: NATURAL
- ADHESIVE TAPE: 3M

PART NO	A	B	PACKAGE
FUA-16	6.0	10.0	2000

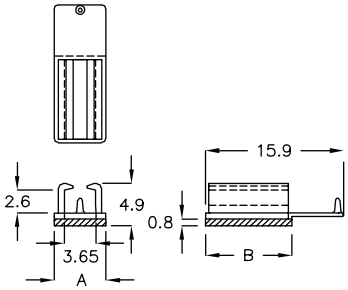

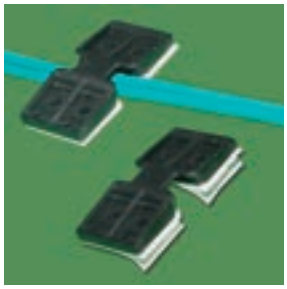

电线固定座 WIRE MOUNT 6-6-4

- MATERIAL: NYLON 66(UL)
- FLAME CLASS: 94V-0/94V-2
- COLOR: BLACK
- ADHESIVE TAPE: 3M

PART NO	A	B	C	D	E	F	PACKAGE
FWF-1A	14.0	12.0	3.5	5.1	3.8	2.6	1000
FWF-1C	24.0	12.0	3.6	9.6	4.8	2.6	500
FWF-1D	20.0	12.0	3.6	7.6	4.8	2.6	
FWF-1M	24.0	12.0	3.8	9.4	5.2	2.8	

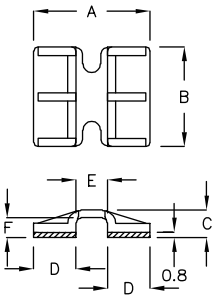

电线固定座 WIRE MOUNT 6-6-5

- MATERIAL: NYLON 66(UL)
- FLAME CLASS: 94V-0/94V-2
- COLOR: BLACK
- ADHESIVE TAPE: 3M

PART NO	A	B	C	D	E	F	PACKAGE
FWF-1F	24.0	12.0	3.6	9.6	4.8	2.6	500
FWF-1N	24.0	12.0	4.1	9.6	4.8	3.1	
FWF-1P	24.0	12.0	4.1	9.4	5.2	3.1	

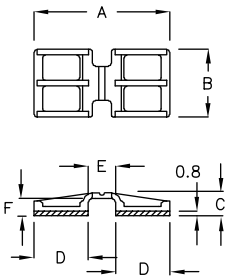

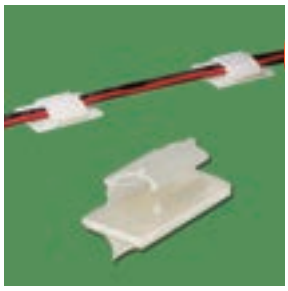

电线固定座 WIRE MOUNT 6-7-1

- MATERIAL: NYLON 66(UL)
- FLAME CLASS: 94V-0/94V-2
- COLOR: NATURAL
- ADHESIVE TAPE: 3M

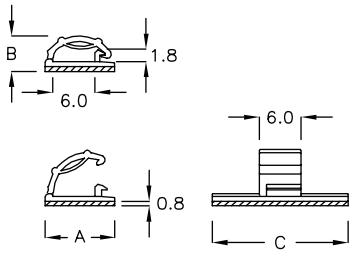

WITH LOCK FEATURE

PART NO	A	B	C	PACKAGE
CHW-1C	10.0	5.5	19.5	500

电线固定座 WIRE MOUNT 6-7-2

- MATERIAL: NYLON 66(UL)
- FLAME CLASS: 94V-0/94V-2
- COLOR: NATURAL
- ADHESIVE TAPE: 3M

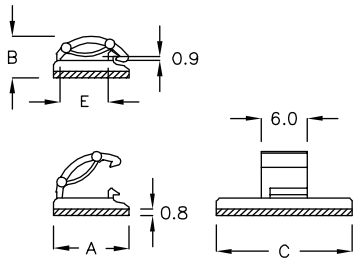

WITH LOCK FEATURE

PART NO	A	B	C	E	PACKAGE
CHW-01	10.0	5.8	19.5	6.0	500
CHW-2M	14.1	8.4	19.6	10.35	
CHW-04	10.0	5.8	12.0	6.0	
CHW-05	10.0	5.8	18.8	6.3	
CHW-07	10.0	5.8	19.5	6.1	

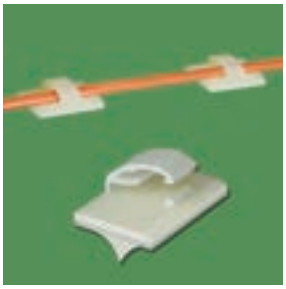

电线固定座 WIRE MOUNT 6-7-3

- MATERIAL: NYLON 66(UL)
- FLAME CLASS: 94V-0/94V-2
- COLOR: NATURAL
- ADHESIVE TAPE: 3M

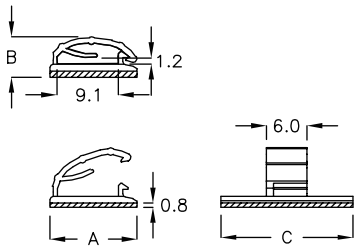

WITH LOCK FEATURE

PART NO	A	B	C	PACKAGE
CHW-2K	13.0	6.3	20.0	500

电线固定座 WIRE MOUNT 6-7-4

- MATERIAL: NYLON 66(UL)
- FLAME CLASS: 94V-0/94V-2
- COLOR: NATURAL
- ADHESIVE TAPE: 3M

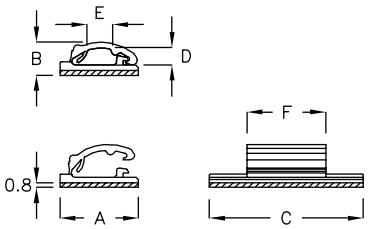

WITH LOCK FEATURE

PART NO	A	B	C	D	E	F	PACKAGE
CHW-2Q	10.0	4.7	19.5	2.2	3.3	10.0	500

电线固定座 WIRE MOUNT 6-7-5

- MATERIAL: NYLON 66(UL)
- FLAME CLASS: 94V-0/94V-2
- COLOR: NATURAL
- ADHESIVE TAPE: 3M

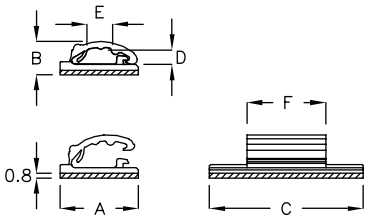

WITH LOCK FEATURE

PART NO	A	B	C	D	E	F	PACKAGE
CHW-2AC	10.0	4.7	19.5	1.8	3.3	10.0	500

电线固定座 WIRE MOUNT 6-8-1

- MATERIAL: NYLON 66(UL)
- FLAME CLASS: 94V-0/94V-2
- COLOR: BLACK
- ADHESIVE TAPE: 3M

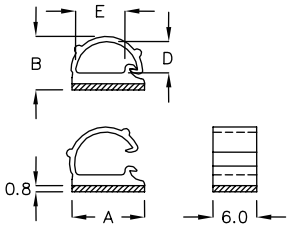

WITH LOCK FEATURE

PART NO	A	B	D	E	PACKAGE
CHW-10MK	10.0	7.3	4.2	6.4	500

电线固定座 WIRE MOUNT 6-8-2

- MATERIAL: NYLON 66(UL)
- FLAME CLASS: 94V-0/94V-2
- COLOR: NATURAL
- ADHESIVE TAPE: 3M

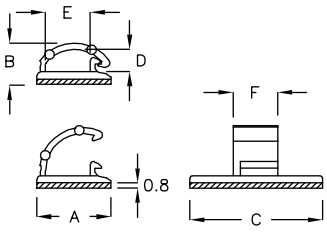

WITH LOCK FEATURE

PART NO	A	B	C	D	E	F	PACKAGE
CHW-1A	10.0	6.1	19.5	3.0	6.0	6.0	500
CHW-1J	8.5	4.7	12.0	1.8	3.5	7.0	1000
CHW-2C	10.0	6.3	20.0	3.0	5.9	11.0	500
CHW-3R	10.0	7.9	30.0	4.3	5.4	20.0	

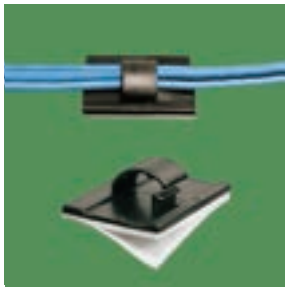

电线固定座 WIRE MOUNT 6-8-3

- MATERIAL: NYLON 66(UL)
- FLAME CLASS: 94V-0/94V-2
- COLOR: BLACK
- ADHESIVE TAPE: 3M

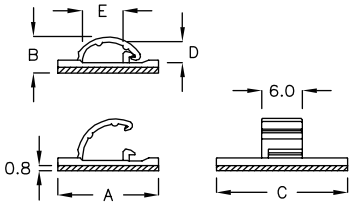

WITH LOCK FEATURE

PART NO	A	B	C	D	E	PACKAGE
CHW-1D	15.0	5.4	19.5	3.0	6.0	500
CHW-1H	15.0	5.3	19.5	2.5	6.0	

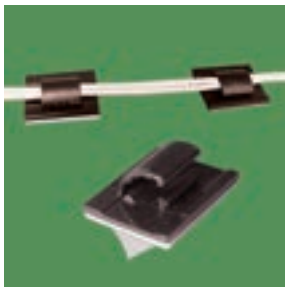

电线固定座 WIRE MOUNT 6-8-4

- MATERIAL: NYLON 66(UL)
- FLAME CLASS: 94V-0/94V-2
- COLOR: BLACK
- ADHESIVE TAPE: 3M

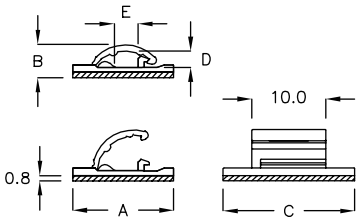

WITH LOCK FEATURE

PART NO	A	B	C	D	E	PACKAGE
CHW-1F	15.0	5.4	19.5	2.5	3.4	500

电线固定座 WIRE MOUNT 6-8-5

- MATERIAL: NYLON 66(UL)
- FLAME CLASS: 94V-0/94V-2
- COLOR: BLACK
- ADHESIVE TAPE: 3M

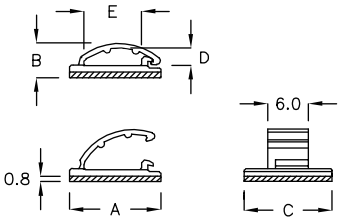

WITH LOCK FEATURE

PART NO	A	B	C	D	E	PACKAGE
CHW-4NJ	13.5	5.1	13.0	2.6	8.5	500

电线固定座 WIRE MOUNT 6-9-1

- MATERIAL: NYLON 66(UL)
- FLAME CLASS: 94V-0/94V-2
- COLOR: NATURAL
- ADHESIVE TAPE: 3M

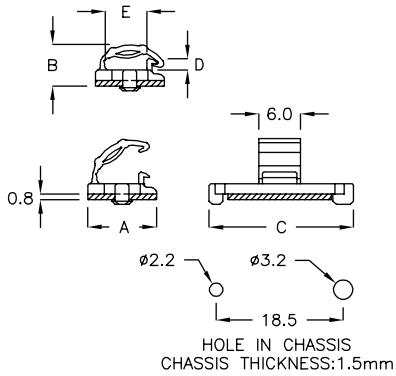

WITH LOCK FEATURE

PART NO	A	B	C	D	E	PACKAGE
CZQ-1SK	10.0	6.1	21.0	1.7	6.0	500

电线固定座 WIRE MOUNT 6-9-2

- MATERIAL: NYLON 66(UL)
- FLAME CLASS: 94V-0/94V-2
- COLOR: NATURAL
- ADHESIVE TAPE: 3M

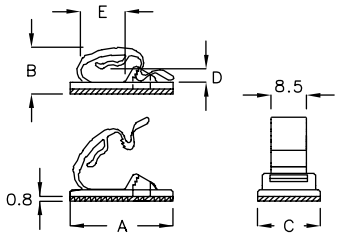

WITH LOCK FEATURE

PART NO	A	B	C	D	E	PACKAGE
CZJ-20K	20.5	10.1	12.5	2.7	8.8	500

电线固定座 WIRE MOUNT 6-9-3

- MATERIAL: NYLON 66(UL)
- FLAME CLASS: 94V-0/94V-2
- COLOR: NATURAL
- ADHESIVE TAPE: 3M

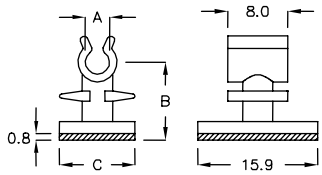

PART NO	A	B	C	PACKAGE
FGH-01	ø3.2	10.3	10.0	500

电线固定座 MOUNTING PURSE LOCK 6-9-4

- MATERIAL: NYLON 66(UL)
- FLAME CLASS: 94V-0/94V-2
- COLOR: NATURAL
- ADHESIVE TAPE: 3M
- SUIT FOR ARCUATE SURFACE

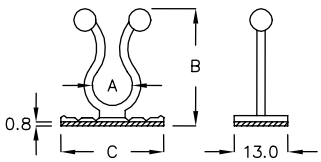

WITH LOCK FEATURE

PART NO	A	B	C	CLOSE DIA	PACKAGE
AB-8C	9.5	28.2	25.0	ø8.2	500

电线固定座 MOUNTING PURSE LOCK 6-9-5

- MATERIAL: NYLON 66(UL)
- FLAME CLASS: 94V-0/94V-2
- COLOR: NATURAL, BLACK
- ADHESIVE TAPE: 3M

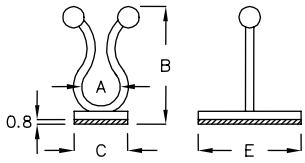

WITH LOCK FEATURE

PART NO	A	B	C	E	CLOSE DIA	PACKAGE
AB-4	6.7	28.6	10.0	19.8	ø5.8	500
AB-9	11.0	31.3	9.0	19.2	ø10.5	200

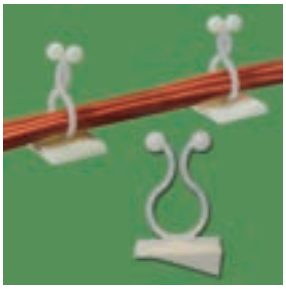

电线固定座 MOUNTING PURSE LOCK —— 6-10-1

- MATERIAL: NYLON 66(UL)
- FLAME CLASS: 94V-0/94V-2
- COLOR: NATURAL
- ADHESIVE TAPE: 3M

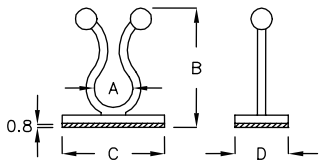

WITH LOCK FEATURE

PART NO	A	B	C	D	CLOSE DIA	PACKAGE
AB-3DT	4.0	18.0	18.0	14.0	ø3.0	500
AB-04C	4.9	25.2	20.0	13.0	ø4.0	
AB-04D	4.9	21.1	14.5	15.5	ø4.0	
AB-05C	6.0	24.7	20.0	13.0	ø5.0	
AB-7	8.7	22.8	20.0	13.0	ø7.0	
AB-07C	8.7	23.0	15.5	16.0	ø7.0	
AB-8	9.5	28.2	25.0	13.0	ø8.2	
AB-08D	9.5	25.4	15.5	20.0	ø8.2	
AB-8FA	9.5	27.0	20.0	14.0	ø8.5	
AB-10	10.8	31.3	21.1	19.2	ø10.0	200
AB-10D	10.8	27.3	18.5	21.0	ø10.0	
AB-12A	14.0	35.5	22.0	13.0	ø12.5	
AB-13	14.8	35.5	22.0	13.0	ø13.0	
AB-13A	14.8	35.5	25.0	20.0	ø13.3	
AB-16	17.8	39.4	25.0	13.0	ø16.2	
AB-16C	17.9	39.3	25.0	18.0	ø16.0	
AB-18	20.0	39.0	25.0	18.0	ø18.0	
AB-20R	22.2	43.0	25.4	25.4	ø20.5	
AB-22	21.0	40.8	25.2	13.0	ø19.0	

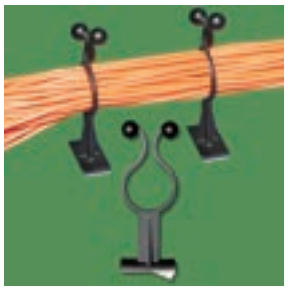

电线固定座 MOUNTING PURSE LOCK —— 6-10-2

- MATERIAL: NYLON 66(UL)
- FLAME CLASS: 94V-0/94V-2
- COLOR: BLACK
- ADHESIVE TAPE: 3M

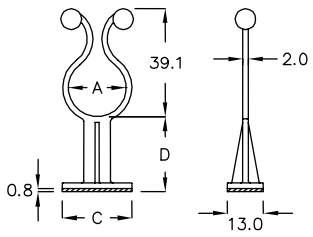

WITH LOCK FEATURE

PART NO	A	C	D	CLOSE DIA	PACKAGE
AB-18JK	21.0	25.2	26.8	ø18.5	200
AB-18MD	21.0	25.2	16.8	ø18.5	

电线固定座 MOUNTING PURSE LOCK —— 6-10-3

- MATERIAL: NYLON 66(UL)
- FLAME CLASS: 94V-0/94V-2
- COLOR: NATURAL
- ADHESIVE TAPE: 3M

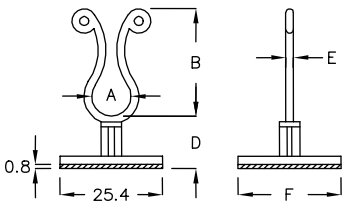

WITH LOCK FEATURE

PART NO	A	B	D	E	F	CLOSE DIA	PACKAGE
AB-8S	9.6	26.3	6.25	1.9	25.4	ø8.5	200
AB-8H	9.6	26.3	12.6	1.9	25.4	ø8.5	
AB-10A	11.6	28.0	27.3	1.9	25.4	ø10.2	
AB-11A	11.4	27.4	4.8	2.0	13.0	ø9.7	

隔离束线座 WIRE SADDLE 6-11-1

- MATERIAL: NYLON 66(UL)
- FLAME CLASS: 94V-0/94V-2
- COLOR: BLACK
- ADHESIVE TAPE: 3M

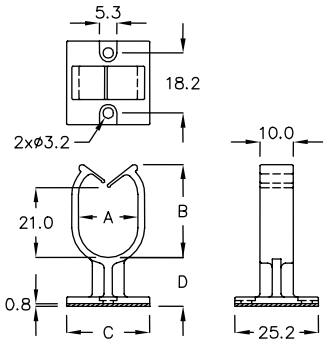

PART NO	A	B	C	D	PACKAGE
CHAD-42JF	18.0	28.0	25.2	14.8	100

隔离束线座 WIRE SADDLE 6-11-2

- MATERIAL: NYLON 66(UL)
- FLAME CLASS: 94V-0/94V-2
- COLOR: NATURAL
- ADHESIVE TAPE: 3M
- ALSO CAN BE FASTENED WITH M2.5 SCREW

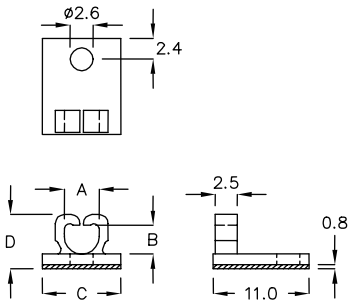

PART NO	A	B	C	D	PACKAGE
CHF-4A	4.0	3.3	9.0	6.5	1000

隔离束线座 WIRE SADDLE 6-11-3

- MATERIAL: NYLON 66(UL)
- FLAME CLASS: 94V-0/94V-2
- COLOR: NATURAL
- ADHESIVE TAPE: 3M
- ALSO CAN BE FASTENED WITH M2.5 or M3 SCREW

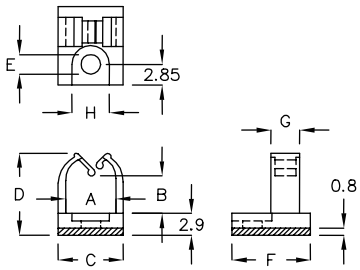

PART NO	A	B	C	D	E	F	G	H	USE SCREW	PACKAGE
CHF-8	6.9	5.0	9.1	11.3	ø2.7	11.0	4.1	5.1	M2.5	500
CHF-8A	6.9	5.0	9.1	11.2	ø3.1	11.0	4.1	5.1	M3	
CHF-8C	7.0	8.8	9.0	15.0	ø2.7	10.9	4.0	5.2	M2.5	

隔离束线座 WIRE SADDLE 6-11-4

- MATERIAL: NYLON 66(UL)
- FLAME CLASS: 94V-0/94V-2
- COLOR: NATURAL
- ADHESIVE TAPE: 3M
- ALSO CAN BE FASTENED WITH M3 SCREW

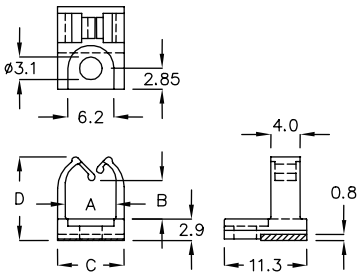

PART NO	A	B	C	D	PACKAGE
CHFQ-6DM	6.9	5.25	9.1	11.4	1000

隔离束线座 WIRE SADDLE 6-12-1

- MATERIAL: NYLON 66(UL)
- FLAME CLASS: 94V-0/94V-2
- COLOR: NATURAL,BLACK
- ADHESIVE TAPE: 3M
- ALSO CAN BE FASTENED WITH M2.5 or M3 SCREW

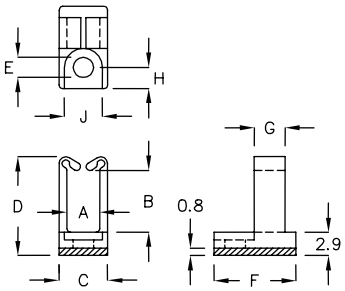

PART NO	A	B	C	D	E	F	G	H	J	USE SCREW	PACKAGE
CHFA-4RQ	4.7	8.3	6.5	13.0	ø2.7	11.0	4.1	2.9	5.1	M2.5	1000
CHFA-6QW	6.8	13.9	10.0	19.6	ø3.1	15.0	5.0	5.0	5.1	M3	
CHFA-11AM	11.5	16.3	15.5	23.2	ø3.1	19.0	5.3	5.0	5.1		
CHFA-15GM	15.5	33.4	19.5	40.7	ø3.1	19.0	8.0	4.5	5.6	M3	200
CHFA-18TK	18.0	38.7	22.0	46.0	ø3.1	22.0	8.0	5.0	5.6	M3	1000

隔离束线座 WIRE SADDLE 6-12-2

- MATERIAL: NYLON 66(UL)
- FLAME CLASS: 94V-0/94V-2
- COLOR: BLACK
- ADHESIVE TAPE: 3M
- ALSO CAN BE FASTENED WITH M3 SCREW

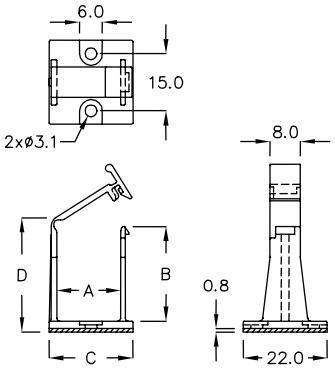

WITH LOCK FEATURE

PART NO	A	B	C	D	PACKAGE
CHFR-16M	16.8	37.2	22.0	42.0	100

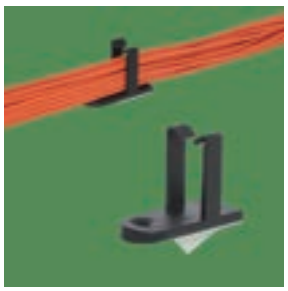

隔离束线座 WIRE SADDLE 6-12-3

NEW

- MATERLIAL: NYLON 66(UL)
- FLAME CLASS: 94V-0/94V-2
- COLOR: BLACK
- ADHESIVE TAPE: 3M
  ALSO CAN BE FASTENED WITH M3 CPUNTERSUNK SCREW

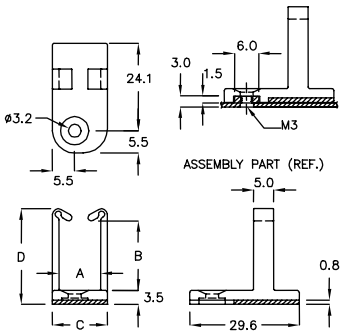

	PART NO	A	B	C	D	PACKAGE
★	CHFZ-17A	10.4	17.2	13.6	23.8	200

隔离束线座 WIRE SADDLE 6-12-4

- MATERIAL: NYLON 66(UL)
- FLAME CLASS: 94V-0/94V-2
- COLOR: NATURAL
- ADHESIVE TAPE: 3M
- ALSO CAN BE FASTENED WITH M3 SCREW

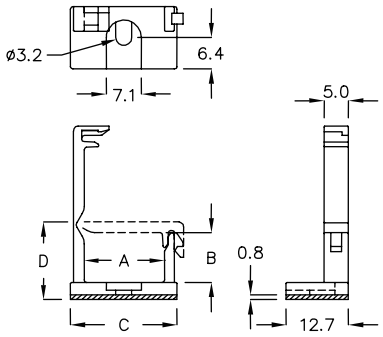

WITH LOCK FEATURE

PART NO	A	B	C	D	PACKAGE
CKMH-16	16.3	10.1	21.6	15.6	200

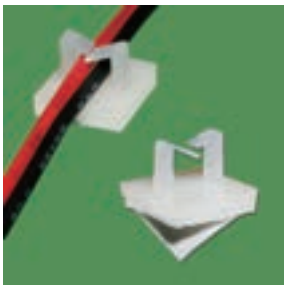

隔离束线座 WIRE SADDLE 6-13-1

- MATERLIAL: NYLON 66(UL)
- FLAME CLASS: 94V-0/94V-2
- COLOR: NATURAL
- ADHESIVE TAPE: 3M

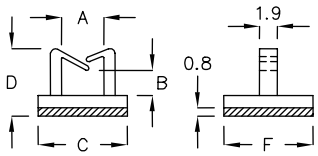

PART NO	A	B	C	D	F	PACKAGE
AB-20C	4.55	2.7	9.6	7.2	9.6	2000
AB-20H	4.5	2.7	8.0	7.3	8.8	
AB-20JQ	4.5	2.7	8.0	7.3	6.0	

隔离束线座 WIRE SADDLE 6-13-2

- MATERLIAL: NYLON 66(UL)
- FLAME CLASS: 94V-0/94V-2
- COLOR: BLACK
- ADHESIVE TAPE: 3M

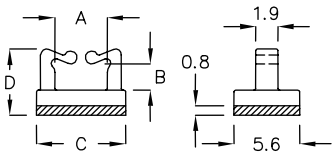

PART NO	A	B	C	D	PACKAGE
ABH-4K	4.5	2.2	7.6	5.65	2000

隔离束线座 WIRE SADDLE 6-13-3

- MATERIAL: NYLON 66(UL)
- FLAME CLASS:94V-0/94V-2
- COLOR: BLACK
- ADHESIVE TAPE: 3M

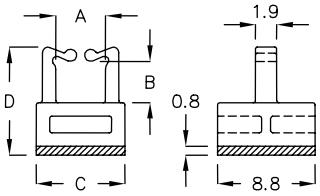

PART NO	A	B	C	D	PACKAGE
ABH-4GN	4.5	3.7	8.0	9.7	1000

隔离束线座 WIRE SADDLE 6-13-4

- MATERLIAL: NYLON 66(UL)
- FLAME CLASS: 94V-0/94V-2
- COLOR: NATURAL
- ADHESIVE TAPE: 3M

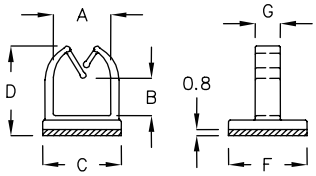

PART NO	A	B	C	D	F	G	PACKAGE
CAR-4A	4.5	2.95	9.4	8.25	9.4	2.0	2000
CAR-9CD	9.2	6.0	12.7	14.2	12.7	4.0	500

隔离束线座 WIRE SADDLE 6-13-5

- MATERLIAL: NYLON 66(UL)
- FLAME CLASS: 94V-0/94V-2
- COLOR: BLACK
- ADHESIVE TAPE: 3M

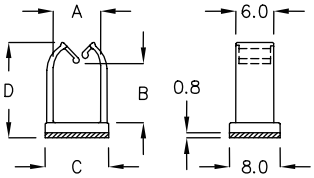

PART NO	A	B	C	D	PACKAGE
CAM-7DF	7.5	9.0	10.0	14.5	500

隔离束线座 WIRE SADDLE 6-14-1

- MATERIAL: NYLON 66(UL)
- FLAME CLASS: 94V-0/94V-2
- COLOR: NATURAL
- ADHESIVE TAPE: 3M

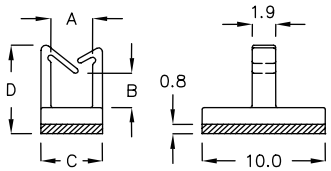

PART NO	A	B	C	D	PACKAGE
ABD-10P	3.4	2.7	5.0	7.2	2000

隔离束线座 WIRE SADDLE 6-14-2

- MATERIAL: NYLON 66(UL)
- FLAME CLASS: 94V-0/94V-2
- COLOR: BLACK,NATURAL
- ADHESIVE TAPE: 3M
- ALSO CAN BE FASTENED WITH M3 SCREW

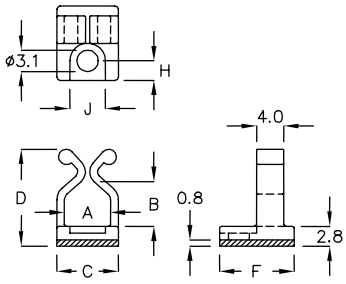

PART NO	A	B	C	D	F	H	J	PACKAGE
CHFD-6RM	6.8	6.3	9.0	14.1	10.9	2.85	5.2	1000
CHFD-9GD	9.0	9.0	12.7	18.3	12.7	3.5	5.3	

隔离束线座 WIRE SADDLE 6-14-3

- MATERIAL: NYLON 66(UL)
- FLAME CLASS: 94V-0/94V-2
- COLOR: BLACK
- ADHESIVE TAPE: 3M

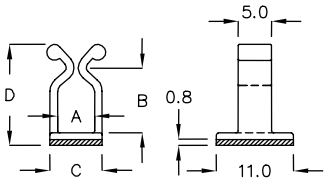

PART NO	A	B	C	D	PACKAGE
CHFT-5AM	5.3	9.0	7.5	15.8	1000

隔离束线座 WIRE SADDLE 6-14-4

- MATERIAL: NYLON 66(UL)
- FLAME CLASS: 94V-0/94V-2
- COLOR: NATURAL
- ADHESIVE TAPE: 3M

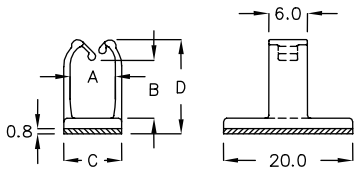

PART NO	A	B	C	D	PACKAGE
CML-7RJ	7.0	9.0	9.0	14.6	500

隔离束线座 WIRE SADDLE 6-14-5

- MATERIAL: NYLON 66(UL)
- FLAME CLASS: 94V-0/94V-2
- COLOR: BLACK
- ADHESIVE TAPE: 3M

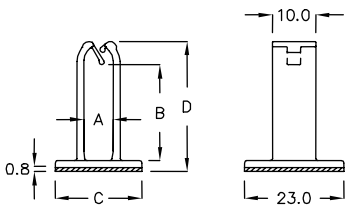

PART NO	A	B	C	D	PACKAGE
CMLA-6	6.8	25.0	20.0	32.8	200

隔离束线座 WIRE SADDLE 6-15-1

- MATERIAL: NYLON 66(UL)
- FLAME CLASS: 94V-0/94V-2
- COLOR: NATURAL
- ADHESIVE TAPE: 3M

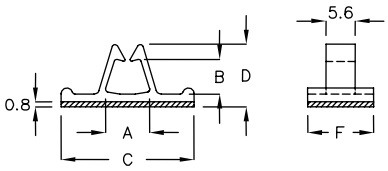

PART NO	A	B	C	D	F	PACKAGE
AB−15A	8.4	6.7	25.5	12.0	12.7	500
AB−15F	8.4	6.0	17.6	11.3	8.9	

电线固定座 WIRE MOUNT 6-15-2

- MATERIAL: NYLON 66(UL)
- FLAME CLASS: 94V-0/94V-2
- COLOR: BLACK
- ADHESIVE TAPE: 3M

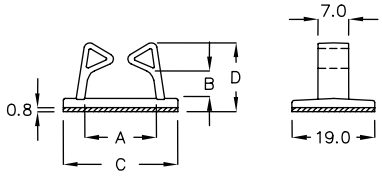

PART NO	A	B	C	D	PACKAGE
AB−15H	16.6	6.3	26.4	15.7	500

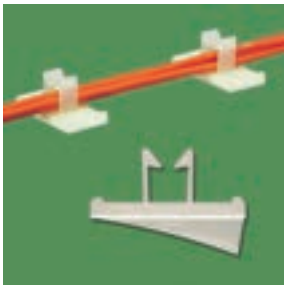

隔离束线座 WIRE SADDLE 6-15-3

- MATERIAL: NYLON 66(UL)
- FLAME CLASS: 94V-0/94V-2
- COLOR: NATURAL
- ADHESIVE TAPE: 3M

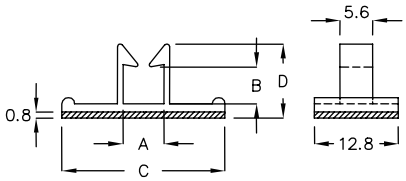

PART NO	A	B	C	D	PACKAGE
AB−15	6.4	5.8	25.5	11.5	500
AB−15C	6.4	4.5	19.0	10.2	

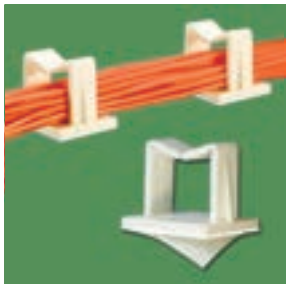

隔离束线座 WIRE SADDLE 6-15-4

- MATERIAL: NYLON 66(UL)
- FLAME CLASS: 94V-0/94V-2
- COLOR: NATURAL, BLACK
- ADHESIVE TAPE: 3M

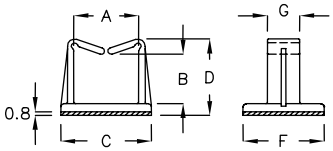

PART NO	A	B	C	D	F	G	PACKAGE
AB−11KW	11.5	26.8	17.0	34.7	13.5	5.3	200
AB−20GP	20.0	15.3	28.0	23.3	25.0	10.0	100

隔离束线座 WIRE SADDLE 6-16-1

- MATERIAL: NYLON 66(UL)
- FLAME CLASS:94V-0/94V-2
- COLOR: NATURAL
- ADHESIVE TAPE: 3M

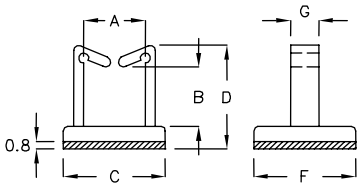

PART NO	A	B	C	D	F	G	PACKAGE
AB−20A	11.2	8.2	21.0	16.3	19.0	5.3	500
★ AB−11CF	11.5	10.0	16.0	18.2	12.5	5.3	
AB−20F	11.5	10.0	17.0	17.9	12.5	5.3	
AB−20	11.5	10.0	21.0	17.9	19.0	5.3	
AB−20K	16.6	9.8	26.4	17.9	19.0	7.0	
AB−17K	17.0	27.8	22.0	35.2	22.0	10.0	100
AB−20D	20.0	10.0	25.7	17.9	19.0	5.3	500

隔离束线座 WIRE SADDLE 6-16-2

- MATERIAL: NYLON 66(UL)
- FLAME CLASS: 94V-0/94V-2
- COLOR: NATURAL
- ADHESIVE TAPE: 3M

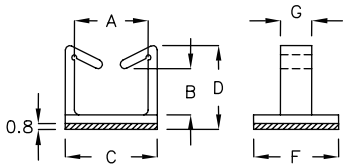

PART NO	A	B	C	D	F	G	PACKAGE
AB−16LM	6.8	14.0	10.0	20.0	16.0	5.0	500
AB−20M	6.8	14.0	10.0	20.0	20.0	5.0	
AB−11SJ	11.5	19.8	15.5	26.8	19.0	5.3	200
AB−15RK	15.1	26.2	19.5	34.0	19.5	10.0	100
AB−20L	16.5	10.2	20.5	18.2	18.9	7.0	200

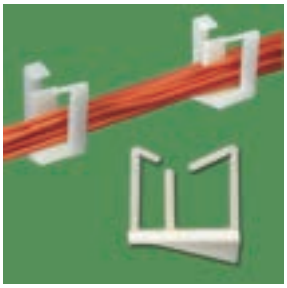

隔离束线座 WIRE SADDLE 6-16-3

- MATERIAL: NYLON 66(UL)
- FLAME CLASS: 94V-0/94V-2
- COLOR: NATURAL
- ADHESIVE TAPE: 3M

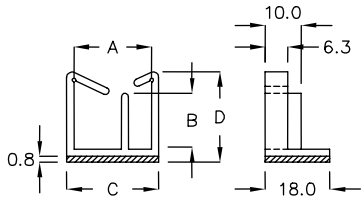

PART NO	A	B	C	D	PACKAGE
AB−21A	21.7	15.5	25.7	24.3	200

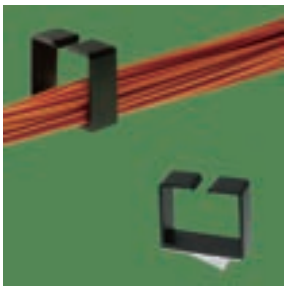

隔离束线座 WIRE SADDLE 6-16-4

- MATERIAL: NYLON 66(UL)
- FLAME CLASS: 94V-0/94V-2
- COLOR: BLACK
- ADHESIVE TAPE: 3M

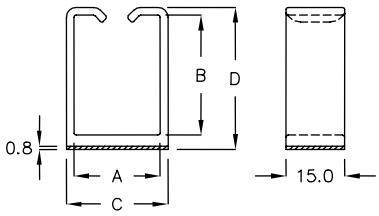

PART NO	A	B	C	D	PACKAGE
ABF−34DM	36.0	29.1	40.0	34.7	100
ABF−36CK	22.0	30.7	26.0	36.3	

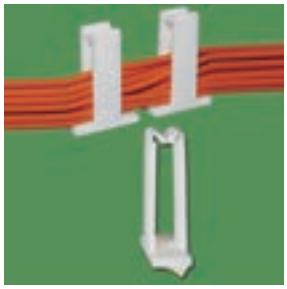

隔离束线座 WIRE SADDLE 6-17-1

- MATERIAL: NYLON 66(UL)
- FLAME CLASS: 94V-0/94V-2
- COLOR: BLACK,NATURAL
- ADHESIVE TAPE: 3M

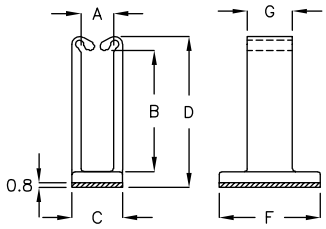

PART NO	A	B	C	D	F	G	PACKAGE
ABK-5Q	5.8	24.0	9.0	29.3	20.0	8.0	200

隔离束线座 WIRE SADDLE 6-17-2

- MATERIAL: NYLON 66(UL)
- FLAME CLASS: 94V-0/94V-2
- COLOR: NATURAL
- ADHESIVE TAPE: 3M

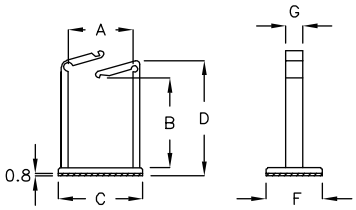

PART NO	A	B	C	D	F	G	PACKAGE
CMF-10CS	10.4	13.6	13.0	19.8	22.0	10.0	200
CMF-15A	15.1	27.7	19.5	34.0	19.5	10.0	100
CMF-17	17.0	27.8	22.0	34.0	22.0	10.0	
CMF-23	23.0	31.8	30.0	40.8	20.0	6.0	

隔离束线座 WIRE SADDLE 6-17-3

- MATERIAL: NYLON 66(UL)
- FLAME CLASS: 94V-0/94V-2
- COLOR: NATURAL
- ADHESIVE TAPE: 3M

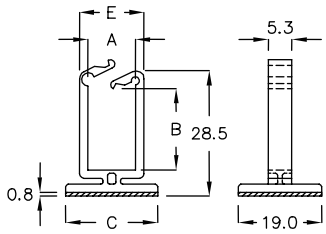

PART NO	A	B	C	E	PACKAGE
CHU-06	10.8	18.5	21.0	14.8	500
CHU-06K	10.8	18.5	16.0	14.8	

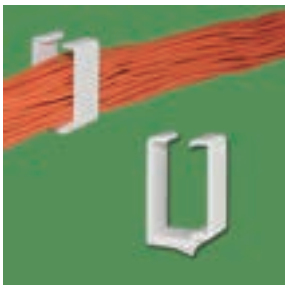

隔离束线座 WIRE SADDLE 6-17-4

- MATERIAL: NYLON 66(UL)
- FLAME CLASS: 94V-0/94V-2
- COLOR: NATURAL
- ADHESIVE TAPE: 3M

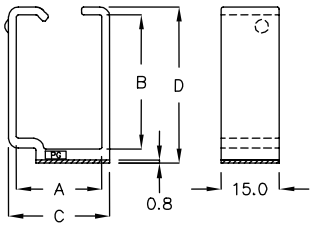

PART NO	A	B	C	D	PACKAGE
PAC-40GS	22.0	34.7	26.0	40.3	100
PAC-50M	27.0	44.7	31.0	50.3	

隔离束线座 WIRE SADDLE 6-18-1

- MATERIAL: NYLON 66(UL)
- FLAME CLASS: 94V-0/94V-2
- COLOR: NATURAL
- ADHESIVE TAPE: 3M

PART NO	A	B	PACKAGE
CZK-28F	28.6	22.8	200

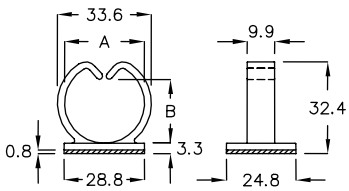

隔离束线座 WIRE SADDLE 6-18-2

- MATERIAL: NYLON 66(UL)
- FLAME CLASS: 94V-0/94V-2
- COLOR: BLACK
- ADHESIVE TAPE: 3M

PART NO	A	B	PACKAGE
CZT-30JR	30.0	29.8	100

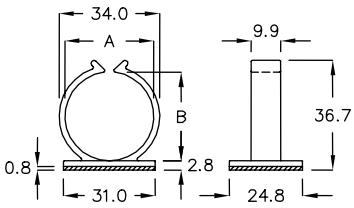

隔离束线座 WIRE SADDLE 6-18-3

- MATERIAL: NYLON 66(UL)
- FLAME CLASS: 94V-0/94V-2
- COLOR: NATURAL
- ADHESIVE TAPE: 3M

PART NO	A	B	PACKAGE
CZW-28JK	28.6	40.5	100

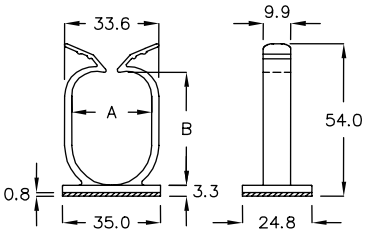

隔离束线座 WIRE SADDLE 6-18-4

- MATERIAL: NYLON 66(UL)
- FLAME CLASS: 94V-0/94V-2
- COLOR: BLACK
- ADHESIVE TAPE: 3M

WITH LOCK FEATURE

PART NO	A	B	PACKAGE
PAK11-4A	11.1	4.4	200

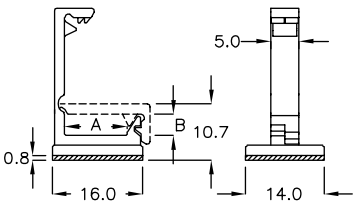

隔离束线座 WIRE SADDLE 6-18-5

- MATERIAL: NYLON 66(UL)
- FLAME CLASS: 94V-0/94V-2
- COLOR: NATURAL
- ADHESIVE TAPE: 3M

WITH LOCK FEATURE

PART NO	A	B	PACKAGE
PAD11-11	11.1	11.4	200

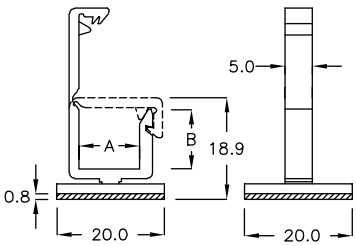

隔离束线座 WIRE SADDLE 6-19-1

- MATERIAL: NYLON 66(UL)
- FLAME CLASS: 94V-0/94V-2
- COLOR: NATURAL
- ADHESIVE TAPE: 3M

WITH LOCK FEATURE

PART NO	A	B	PACKAGE
PAD10-19	11.0	19.3	200

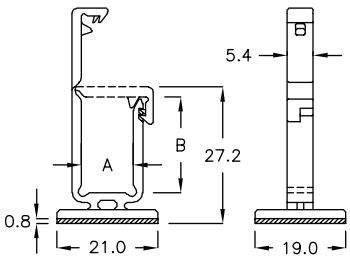

隔离束线座 WIRE SADDLE 6-19-2

- MATERIAL: NYLON 66(UL)
- FLAME CLASS: 94V-0/94V-2
- COLOR: NATURAL
- ADHESIVE TAPE: 3M

WITH LOCK FEATURE

PART NO	A	B	PACKAGE
CKM-01	10.8	12.0	200

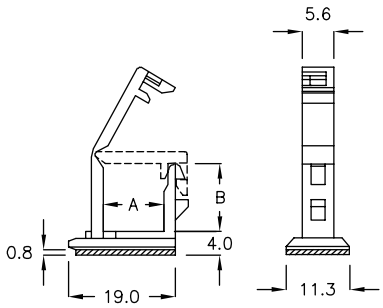

隔离束线座 WIRE SADDLE 6-19-3

- MATERIAL: NYLON 66(UL)
- FLAME CLASS: 94V-0/94V-2
- COLOR: NATURAL
- ADHESIVE TAPE: 3M

WITH LOCK FEATURE

PART NO	A	B	PACKAGE
CKZ-16	16.0	14.0	200

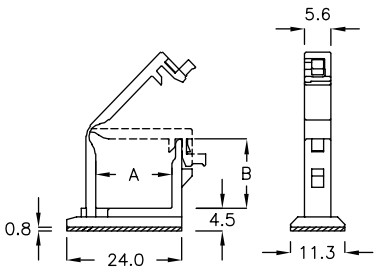

隔离束线座 WIRE SADDLE 6-19-4

- MATERIAL: NYLON 66(UL)
- FLAME CLASS: 94V-0/94V-2
- COLOR: NATURAL
- ADHESIVE TAPE: 3M

WITH LOCK FEATURE

PART NO	A	B	C	PACKAGE
CKM-02	10.5	11.5	4.0	200
CKM-03	11.1	15.0	4.0	

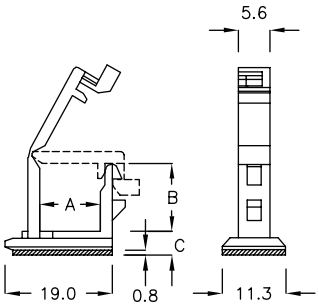

电线固定板 CABLE CLAMP 6-19-5

NEW

- MATERIAL: NYLON 66(UL)
- FLAME CLASS: 94V-0/94V-2
- COLOR: BLACK
- ADHESIVE TAPE: 3M
  ALSO CAN BE FASTENED
  WITH M3 SCREW

WITH LOCK FEATURE

	PART NO	A	B	PACKAGE
★	CKZA-16K	16.0	15.7	200

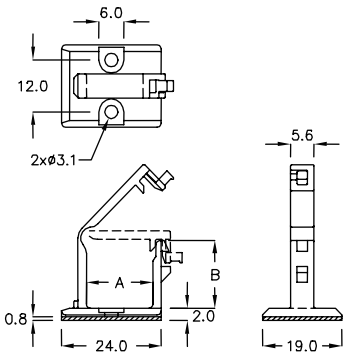

隔离束线座 WIRE SADDLE 6-20-1

- MATERIAL: NYLON 66(UL)
- FLAME CLASS: 94V-0/94V-2
- COLOR: BLACK
- ADHESIVE TAPE: 3M
- ALSO CAN BE FASTENED WITH M3 SCREW

WITH LOCK FEATURE

PART NO	A	B	C	PACKAGE
CKMA-21	14.0	27.6	32.8	100

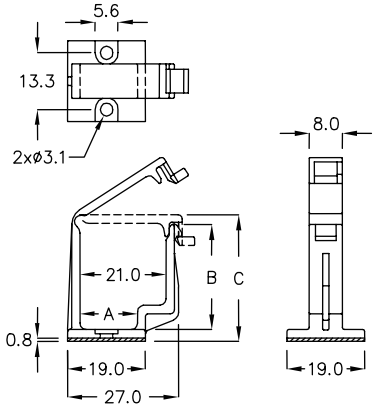

隔离束线座 WIRE SADDLE 6-20-2

- MATERIAL: NYLON 66(UL)
- FLAME CLASS: 94V-0/94V-2
- COLOR: NATURAL
- ADHESIVE TAPE: 3M

WITH LOCK FEATURE

PART NO	A	B	PACKAGE
CKW-01	13.6	5.3	200

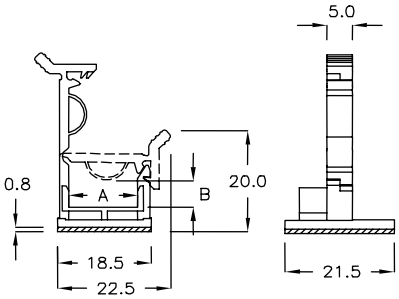

电线固定座 WIRE MOUNT 6-20-3

- MATERIAL: NYLON 66(UL)
- FLAME CLASS: 94V-0/94V-2
- COLOR: NATURAL
- ADHESIVE TAPE: 3M

PART NO	A	B	D	PACKAGE
FRAC-3K	ø16.0	7.3	ø3.8	500

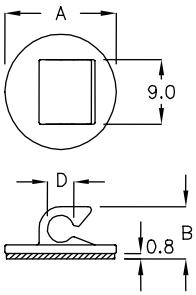

电线固定座 WIRE MOUNT 6-20-4

- MATERIAL: NYLON 66(UL)
- FLAME CLASS: 94V-0/94V-2
- CABLE DIAMETER: Φ4~Φ5
- COLOR: NATURAL
- ADHESIVE TAPE: 3M

PART NO	A	B	C	D	PACKAGE
FW-1P	12.0	7.3	19.0	ø4.5	500

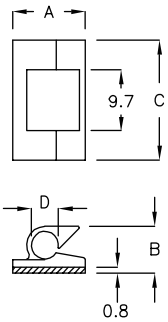

电线固定座 WIRE MOUNT 6-20-5

- MATERIAL: NYLON 66(UL)
- FLAME CLASS: 94V-0/94V-2
- CABLE DIAMETER: Φ4~Φ5
- COLOR: NATURAL
- ADHESIVE TAPE: 3M

PART NO	A	B	C	D	PACKAGE
FW-1	16.0	7.3	18.9	ø4.4	500

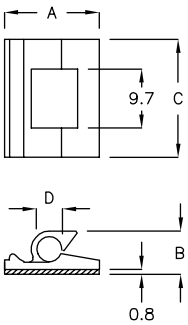

电线固定座 WIRE MOUNT 6-21-1

- MATERIAL: NYLON 66(UL)
- FLAME CLASS: 94V-0/94V-2
- CABLE DIAMETER: Φ4~Φ5
- COLOR: BLACK
- ADHESIVE TAPE: 3M

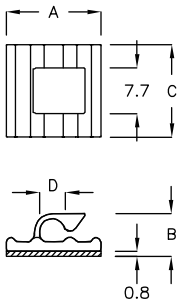

PART NO	A	B	C	D	PACKAGE
FW-1GH	16.0	7.2	15.6	ø4.4	500

电线固定座 WIRE MOUNT 6-21-2

- MATERIAL: NYLON 66(UL)
- FLAME CLASS: 94V-0/94V-2
- COLOR: NATURAL
- ADHESIVE TAPE: 3M

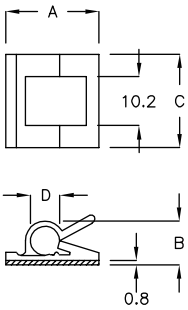

PART NO	A	B	C	D CABLE DIM:	PACKAGE
FW-1A	19.0	8.8	20.2	ø6.0	500
FW-1AM	19.0	8.8	19.0	ø5.2	

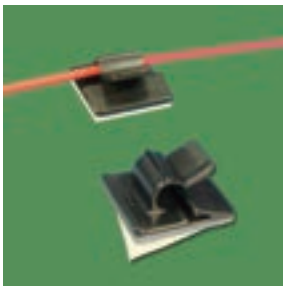

电线固定座 WIRE MOUNT 6-21-3

- MATERIAL: NYLON 66(UL)
- FLAME CLASS: 94V-0/94V-2
- COLOR: BLACK
- ADHESIVE TAPE: 3M

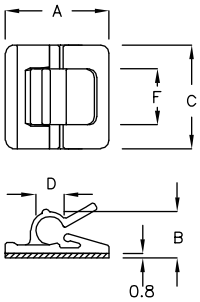

PART NO	A	B	C	D	F	PACKAGE
FW-1AS	19.0	8.5	19.0	ø5.2	10.2	500

电线固定座 WIRE MOUNT 6-21-4

- MATERIAL: NYLON 66(UL)
- FLAME CLASS: 94V-0/94V-2
- COLOR: NATURAL
- ADHESIVE TAPE: 3M

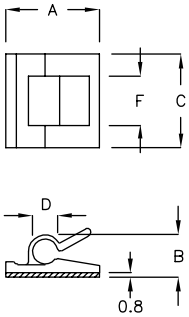

PART NO	A	B	C	D	F	PACKAGE
FW-1AK	16.0	7.3	19.0	ø4.0	10.2	500
FW-1AP	16.0	6.4	16.0	ø3.0	8.5	
FW-1AQ	16.0	7.4	19.0	ø4.0	10.2	
FW-1AR	16.0	7.4	19.0	ø3.6	10.2	
FW-1AT	16.0	7.4	19.0	ø4.2	10.2	

电线固定座 WIRE MOUNT 6-21-5

- MATERIAL: NYLON 66(UL)
- FLAME CLASS: 94V-0/94V-2
- COLOR: NATURAL
- ADHESIVE TAPE: 3M

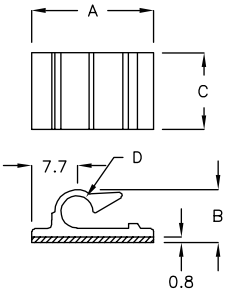

PART NO	A	B	C	D	PACKAGE
FW-1B	20.7	9.0	13.0	ø5.6	500
FW-1C	20.7	7.5	10.0	ø3.6	

电线固定座 WIRE MOUNT 6-22-1

- MATERIAL: NYLON 66(UL)
- FLAME CLASS: 94V-0/94V-2
- COLOR: NATURAL
- ADHESIVE TAPE: 3M

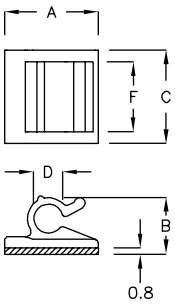

PART NO	A	B	C	D	F	PACKAGE
FW-1AJ	12.0	7.3	12.0	ø3.8	9.0	500

电线固定座 WIRE MOUNT 6-22-2

- MATERIAL: NYLON 66(UL)
- FLAME CLASS: 94V-0/94V-2
- COLOR: NATURAL
- ADHESIVE TAPE: 3M

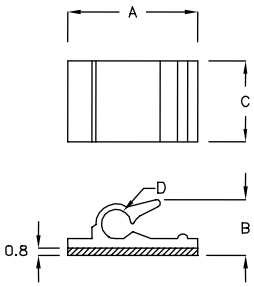

PART NO	A	B	C	D	PACKAGE
FW-2F	20.8	8.6	13.0	ø4.7	500

电线固定座 WIRE MOUNT 6-22-3

- MATERIAL: NYLON 66(UL)
- FLAME CLASS: 94V-0/94V-2
- COLOR: NATURAL
- ADHESIVE TAPE: 3M

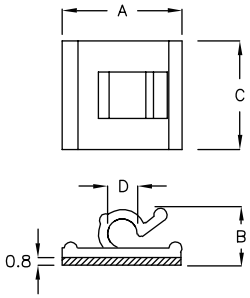

PART NO	A	B	C	D	PACKAGE
FW-01H	13.0	6.0	12.0	ø3.3	1000

电线固定座 WIRE MOUNT 6-22-4

- MATERIAL: NYLON 66(UL)
- FLAME CLASS: 94V-0/94V-2
- COLOR: NATURAL
- ADHESIVE TAPE: 3M
- SUIT FOR ARCUATE SURFACE

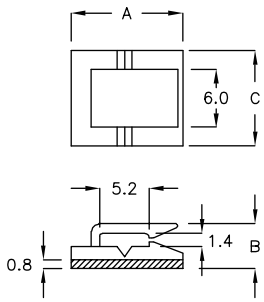

PART NO	A	B	C	PACKAGE
FW-01F	12.0	4.6	10.0	1000

电线固定座 WIRE MOUNT 6-22-5

- MATERIAL: NYLON 66(UL)
- FLAME CLASS: 94V-0/94V-2
- COLOR: NATURAL
- ADHESIVE TAPE: 3M

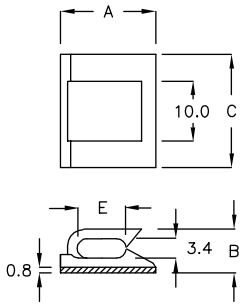

PART NO	A	B	C	E	PACKAGE
FW-2	16.0	7.2	19.0	8.3	500
FW-02P	14.0	7.2	16.0	6.3	
FW-02Q	18.0	7.2	19.0	10.2	

电线固定座 WIRE MOUNT 6-23-1

- MATERIAL: NYLON 66(UL)
- FLAME CLASS: 94V-0/94V-2
- COLOR: NATURAL
- ADHESIVE TAPE: 3M

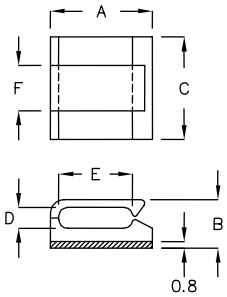

PART NO	A	B	C	D	E	F	PACKAGE
FW-6NJ	6.5	4.5	12.0	1.4	4.0	6.0	1000
FW-02N	9.8	4.5	9.5	1.4	6.5	6.4	
FW-2JG	8.0	7.6	12.0	4.4	5.1	4.0	500
FW-2MQ	10.0	5.9	9.4	2.5	4.25	6.4	
FW-2MP	12.0	6.3	9.4	2.5	6.25	6.4	
FW-2S	12.5	6.0	9.5	2.5	8.4	6.7	
FW-2SP	12.7	6.3	12.5	2.5	8.2	6.3	
FW-2AG	12.7	6.4	12.7	2.8	8.4	6.4	
FW-2M	14.5	6.4	9.5	2.5	10.2	6.4	
FW-2MA	16.7	6.6	13.0	3.1	11.6	9.0	

电线固定座 WIRE MOUNT 6-23-2

- MATERIAL: NYLON 66(UL)
- FLAME CLASS: 94V-0/94V-2
- COLOR: NATURAL
- ADHESIVE TAPE: 3M

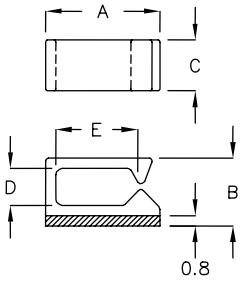

PART NO	A	B	C	D	E	PACKAGE
FW-2SC	9.0	5.3	4.0	2.9	6.4	1000
FW-9NT	9.0	5.3	8.0	2.9	6.5	

电线固定座 WIRE MOUNT 6-23-3

- MATERIAL: NYLON 66(UL)
- FLAME CLASS:94V-0/94V-2
- COLOR: NATURAL
- ADHESIVE TAPE: 3M

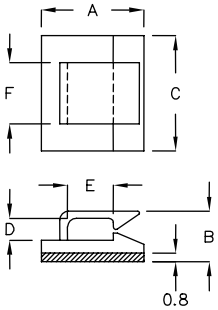

PART NO	A	B	C	D	E	F	PACKAGE
FW-1Q	11.7	5.2	10.0	2.0	5.2	6.0	1000
FW-1S	11.7	5.6	16.0	2.5	5.2	7.1	
FW-1M	12.3	6.4	15.9	3.2	6.0	7.0	
FW-19A	19.9	6.1	11.9	2.6	13.2	10.0	500
FW-019	19.9	6.7	14.0	3.2	13.2	10.0	

电线固定座 WIRE MOUNT 6-23-4

- MATERIAL: ABS(UL)
- FLAME CLASS: 94HB
- COLOR: BLACK
- ADHESIVE TAPE: 3M

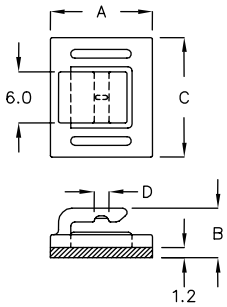

PART NO	A	B	C	D SUITABLE CABLE	PACKAGE
FYS-4HJ	12.0	5.8	14.0	ø2.1	500

电线固定座 WIRE MOUNT 6-24-1

- MATERIAL: NYLON 66(UL)
- FLAME CLASS: 94V-0/94V-2
- COLOR: NATURAL
- ADHESIVE TAPE: 3M

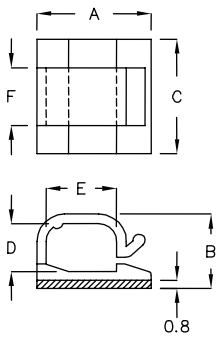

PART NO	A	B	C	D	E	F	PACKAGE
FW-2D	19.0	11.8	19.0	7.8	12.5	9.7	500
FW-2DP	19.05	12.25	19.05	7.85	11.7	9.5	
FW-2RN	19.25	12.15	15.5	7.9	11.7	14.0	
FW-2DG	26.0	19.4	19.0	15.0	18.6	9.5	
FW-2DT	29.4	12.2	19.0	7.8	22.0	9.5	200

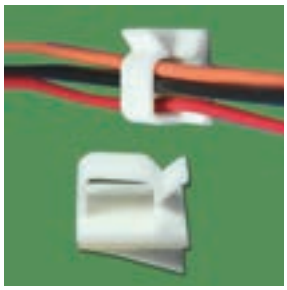

电线固定座 WIRE MOUNT 6-24-2

- MATERIAL: NYLON 66(UL)
- FLAME CLASS: 94V-0/94V-2
- COLOR: NATURAL
- ADHESIVE TAPE: 3M

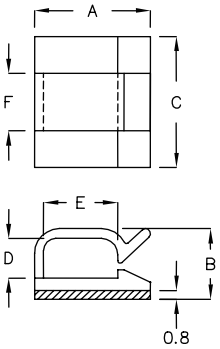

PART NO	A	B	C	D	E	F	PACKAGE
FW-1DS	11.4	8.1	16.0	4.7	6.0	7.0	500
FW-3DK	13.0	8.7	14.0	5.2	9.0	7.1	
FW-1D	13.4	8.1	15.9	4.7	8.0	7.0	
FW-3D	14.4	8.3	16.0	4.8	9.0	7.0	
FW-4D	14.4	8.7	15.9	5.2	8.2	7.1	
FW-1DL	15.4	8.1	16.0	4.7	9.9	7.0	
FW-5D	16.8	10.2	16.0	6.5	10.1	7.0	
FW-20HQ	20.0	10.1	16.0	6.6	15.8	9.0	
FW-22AD	22.7	9.5	20.0	6.0	18.0	10.0	200
FW-33H	33.0	10.4	20.0	6.0	26.8	10.0	

电线固定座 WIRE MOUNT 6-24-3

- MATERIAL: NYLON 66(UL)
- FLAME CLASS: 94V-0/94V-2
- COLOR: NATURAL
- ADHESIVE TAPE: 3M

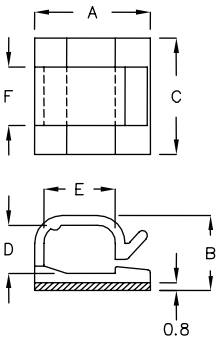

PART NO	A	B	C	D	E	F	PACKAGE
FW-2DS	14.9	9.5	19.0	6.0	7.9	9.6	500
FW-2DM	16.0	9.5	19.0	6.0	9.0	9.6	
FW-6D	20.8	12.1	19.0	8.2	13.6	9.0	

电线固定座 WIRE MOUNT 6-24-4

- MATERIAL: NYLON 66(UL)
- FLAME CLASS: 94V-0/94V-2
- COLOR: NATURAL
- ADHESIVE TAPE: 3M

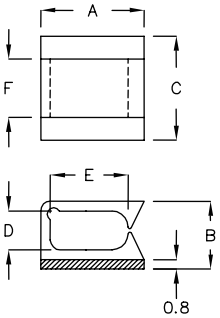

PART NO	A	B	C	D	E	F	PACKAGE
FW-2KP	12.0	7.0	12.1	3.5	6.2	9.0	500
FW-2KQ	13.0	7.05	12.0	3.5	8.2	9.0	
FW-2K	14.0	7.24	12.1	3.5	10.5	10.0	
FW-2LP	14.0	9.8	16.0	6.0	7.5	9.0	
FW-2LQ	16.0	9.8	16.0	6.0	9.6	9.0	
FW-2L	16.0	9.9	16.0	6.0	12.0	9.0	

电线固定座 WIRE MOUNT 6-25-1

- MATERIAL: NYLON 66(UL)
- FLAME CLASS: 94V-0/94V-2
- COLOR: BLACK
- ADHESIVE TAPE: 3M

PART NO	A	B	C	D	PACKAGE
FW-15ZK	15.4	8.1	16.0	5.2	1000

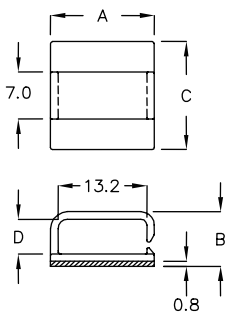

电线固定座 WIRE MOUNT 6-25-2

- MATERIAL: NYLON 66(UL)
- FLAME CLASS: 94V-0/94V-2
- COLOR: NATURAL
- ADHESIVE TAPE: 3M

PART NO	A	B	C	D	PACKAGE
FDW-1	16.0	7.3	16.0	3.7	500

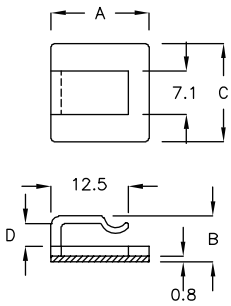

电线固定座 WIRE MOUNT 6-25-3

- MATERIAL: NYLON 66(UL)
- FLAME CLASS: 94V-0/94V-2
- COLOR: NATURAL
- ADHESIVE TAPE: 3M
- ALSO CAN BE FASTENED WITH M3 SCREW

PART NO	A	B	C	D	PACKAGE
FDW-3	27.0	9.3	17.0	5.7	500

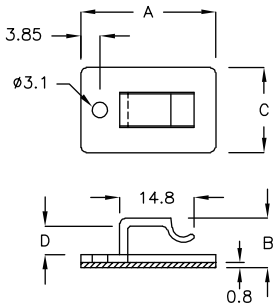

电线固定座 WIRE MOUNT 6-25-4

- MATERIAL: NYLON 66(UL)
- FLAME CLASS: 94V-0/94V-2
- COLOR: NATURAL
- ADHESIVE TAPE: 3M

PART NO	A	C	PACKAGE
CU-01A	8.2	3.3	1000

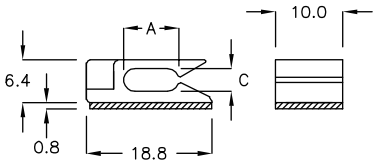

电线固定座 WIRE MOUNT 6-25-5

- MATERIAL: NYLON 66(UL)
- FLAME CLASS: 94V-0/94V-2
- COLOR: NATURAL
- ADHESIVE TAPE: 3M

PART NO	A	B	C	D	PACKAGE
CU-01D	8.6	3.3	4.9	3.3	1000

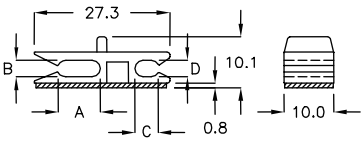

电线固定座 WIRE MOUNT 6-26-1

- MATERIAL: NYLON 66(UL)
- FLAME CLASS: 94V-0/94V-2
- COLOR: NATURAL
- ADHESIVE TAPE: 3M
- ALSO CAN BE FASTENED WITH M4 COUNTERSUNK SCREW

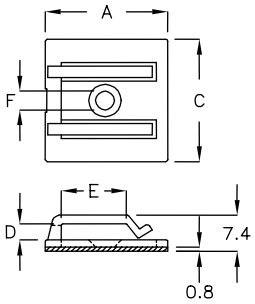

PART NO	A	C	D	E	F	PACKAGE
FSC-01	25.7	25.4	3.3	13.6	ø4.7	500
FSC-02	25.4	25.4	3.05	12.5	ø5.0	

扁平电缆固定座 FLAT CABLE CLAMP 6-26-2

- MATERIAL: NYLON 66(UL)
- FLAME CLASS: 94V-0/94V-2
- COLOR: BLACK
- ADHESIVE TAPE: 3M
- ALSO CAN BE FASTENED WITH M3 SCREW

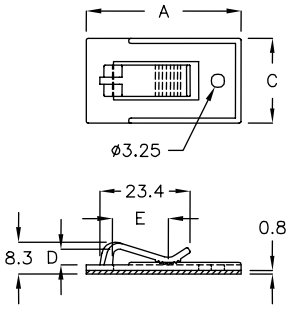

PART NO	A	C	D	E	PACKAGE
FDX-40	40.0	22.0	4.0	14.5	500

电线固定座 WIRE MOUNT 6-26-3

- MATERIAL: NYLON 66(UL)
- FLAME CLASS: 94V-0/94V-2
- COLOR: NATURAL
- ADHESIVE TAPE: 3M

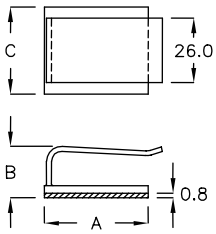

PART NO	A	B	C	PACKAGE
FDM-42	42.0	19.1	35.0	100

固定座 MOUNT 6-26-4

- MATERIAL: NYLON 66(UL)
- FLAME CLASS: 94V-0/94V-2
- COLOR: NATURAL
- ADHESIVE TAPE: 3M

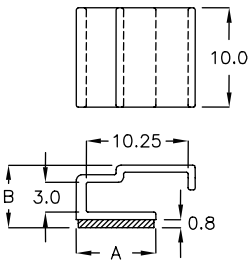

PART NO	A	B	PACKAGE
FSL-12GK	8.0	6.3	1000

电线固定座 WIRE MOUNT 6-26-5

- MATERIAL: NYLON 66(UL)
- FLAME CLASS: 94V-0/94V-2
- COLOR: NATURAL
- ADHESIVE TAPE: 3M

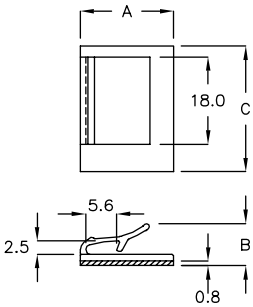

PART NO	A	B	C	PACKAGE
FDK-25	17.0	7.65	25.0	500

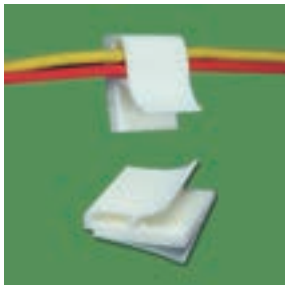

电线固定座 WIRE MOUNT 6-27-1

- MATERIAL: NYLON 66(UL)
- FLAME CLASS: 94V-0/94V-2
- COLOR: NATURAL
- ADHESIVE TAPE: 3M

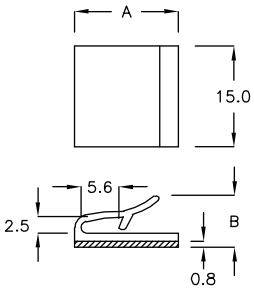

PART NO	A	B	PACKAGE
FW−11	15.5	7.6	500

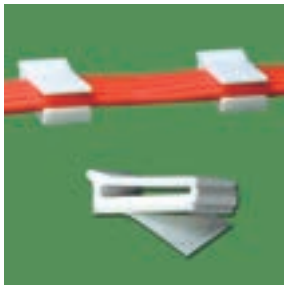

电线固定座 WIRE MOUNT 6-27-2

- MATERIAL: NYLON 66(UL)
- FLAME CLASS: 94V-0/94V-2
- COLOR: NATURAL
- ADHESIVE TAPE: 3M

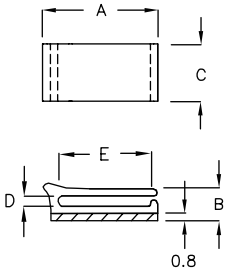

PART NO	A	B	C	D	E	PACKAGE
FYK−16A	16.15	4.3	8.0	1.5	13.0	500

电线固定座 WIRE MOUNT 6-27-3

- MATERIAL: NYLON 66(UL)
- FLAME CLASS: 94V-0/94V-2
- COLOR: NATURAL
- ADHESIVE TAPE: 3M

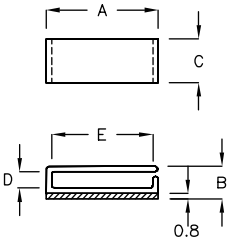

PART NO	A	B	C	D	E	PACKAGE
FYM−20M	20.5	5.8	8.0	3.0	18.5	500
FYM−21	21.0	4.3	8.0	1.5	19.0	

电线固定座 WIRE MOUNT 6-27-4

- MATERIAL: NYLON 66(UL)
- FLAME CLASS: 94V-0/94V-2
- COLOR: NATURAL
- ADHESIVE TAPE: 3M

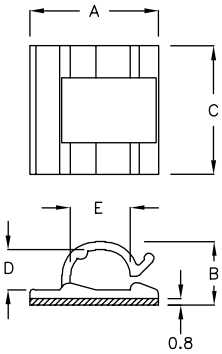

PART NO	A	B	C	D	E	PACKAGE
FW−2DN	25.4	12.2	15.6	7.9	8.0	500
FW−2DA	25.4	12.2	15.6	7.9	11.7	
FW−2DC	25.4	15.5	15.9	11.1	11.7	
FW−2DL	25.4	12.1	25.4	7.9	11.8	
FW−2DW	25.4	12.1	25.4	7.9	15.0	

电线固定座 WIRE MOUNT 6-27-5

- MATERIAL: NYLON 66(UL)
- FLAME CLASS: 94V-0/94V-2
- COLOR: NATURAL
- ADHESIVE TAPE: 3M

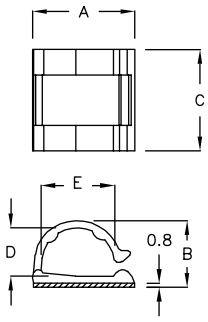

PART NO	A	B	C	D	E	PACKAGE
FW−2DR	25.4	16.3	25.4	11.8	15.0	200
FW−2DK	25.4	16.3	25.4	11.8	18.4	
FW−2DY	40.0	26.2	40.0	20.2	20.0	50
FW−2DJ	40.0	26.2	40.0	20.2	28.8	

电线固定座 WIRE MOUNT 6-28-1

- MATERIAL: NYLON 66(UL)
- FLAME CLASS: 94V-0/94V-2
- COLOR: NATURAL
- ADHESIVE TAPE: 3M
- SUIT FOR ARCUATE SURFACE

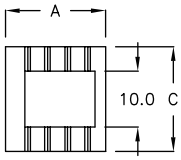

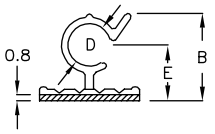

PART NO	A	B	C	D	E	PACKAGE
FW-1CH	18.2	13.2	19.0	ø5.0	8.4	500
FW-2CH	18.2	15.2	19.0	ø7.8	9.9	
FW-3CH	18.2	13.2	19.0	ø6.7	8.4	
FW-4CH	23.0	15.3	15.0	ø7.8	9.9	

电线固定座 WIRE MOUNT 6-28-2

- MATERIAL: NYLON 66(UL)
- FLAME CLASS: 94V-0/94V-2
- CABLE DIAMETER: Φ7.8
- COLOR: NATURAL
- ADHESIVE TAPE: 3M
- SUIT FOR ARCUATE SURFACE

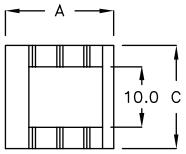

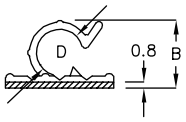

PART NO	A	B	C	D	PACKAGE
FW-2C	18.2	11.0	19.0	ø7.8	500

电线固定座 WIRE MOUNT 6-28-3

- MATERIAL: NYLON 66(UL)
- FLAME CLASS: 94V-0/94V-2
- CABLE DIAMETER: Φ9.1
- COLOR: NATURAL
- ADHESIVE TAPE: 3M

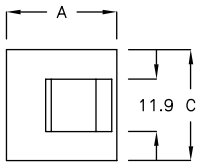

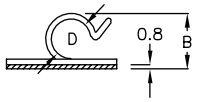

PART NO	A	B	C	D	PACKAGE
FW-2DQ	25.1	12.6	25.1	ø9.1	500

电线固定座 WIRE MOUNT 6-28-4

- MATERIAL: NYLON 66(UL)
- FLAME CLASS: 94V-0/94V-2
- COLOR: NATURAL
- ADHESIVE TAPE: 3M

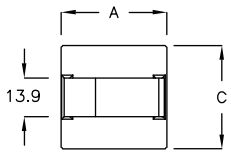

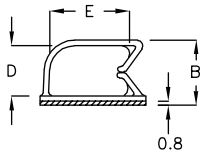

PART NO	A	B	C	D	E	PACKAGE
FW-6F	38.0	22.8	37.2	18.0	28.6	100

电线固定座 WIRE MOUNT 6-28-5

- MATERIAL: NYLON 66(UL)
- FLAME CLASS: 94V-0/94V-2
- COLOR: NATURAL
- ADHESIVE TAPE: 3M

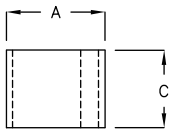

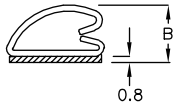

PART NO	A	B	C	PACKAGE
FW-7	19.2	11.4	20.0	500
FW-7S	19.2	11.4	15.0	

电线固定座 WIRE MOUNT 6-29-1

- MATERIAL: NYLON 66(UL)
- FLAME CLASS: 94V-0/94V-2
- COLOR: BLACK
- ADHESIVE TAPE: 3M

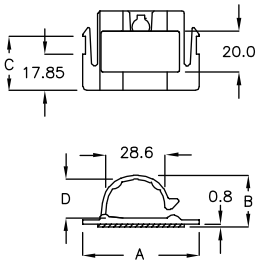

PART NO	A	B	C	D	PACKAGE
FWB-12	57.3	24.8	26.5	19.1	100

电线固定座 WIRE MOUNT 6-29-2

- MATERIAL: NYLON 66(UL)
- FLAME CLASS: 94V-0/94V-2
- COLOR: BLACK

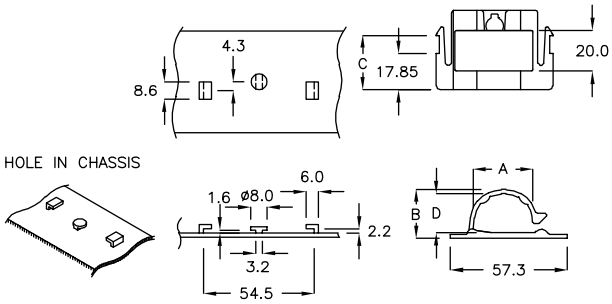

PART NO	A	B	C	D	PACKAGE
FWJ-01	28.6	24.0	26.5	19.1	100

电线固定座 WIRE MOUNT 6-29-3

- MATERIAL: NYLON 66(UL)
- FLAME CLASS: 94V-0/94V-2
- COLOR: NATURAL
- ADHESIVE TAPE: 3M

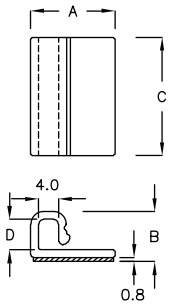

PART NO	A	B	C	D	PACKAGE
FSD-6A	16.5	9.8	32.0	6.0	500

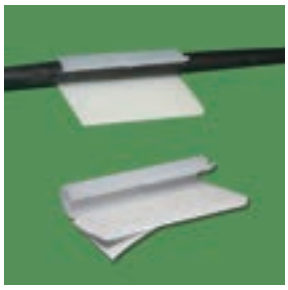

电线固定座 WIRE MOUNT 6-29-4

- MATERIAL: NYLON 66(UL)
- FLAME CLASS: 94V-0/94V-2
- COLOR: NATURAL
- ADHESIVE TAPE: 3M

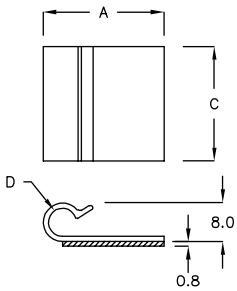

PART NO	A	C	D	PACKAGE
FWG-38	24.7	37.5	ø5.8	100

电线固定座 WIRE MOUNT 6-29-5

- MATERIAL: NYLON 66(UL)
- FLAME CLASS: 94V-0/94V-2
- COLOR: NATURAL
- ADHESIVE TAPE: 3M

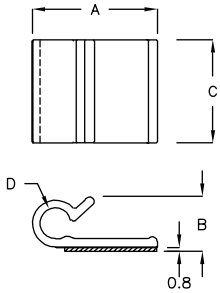

PART NO	A	B	C	D	PACKAGE
FWG-10	13.4	5.95	10.0	ø2.7	1000
FWG-12	14.5	6.75	12.0	ø3.7	200

电线固定座 WIRE MOUNT 6-30-1

- MATERIAL: NYLON 66(UL)
- FLAME CLASS: 94V-0/94V-2
- COLOR: NATURAL
- ADHESIVE TAPE: 3M

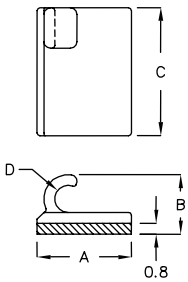

PART NO	A	B	C	D	PACKAGE
FWGA-10C	7.0	4.4	10.3	ø2.0	500

电线固定座 WIRE MOUNT 6-30-2

- MATERIAL: NYLON 66(UL)
- FLAME CLASS: 94V-0/94V-2
- COLOR: NATURAL
- ADHESIVE TAPE: 3M

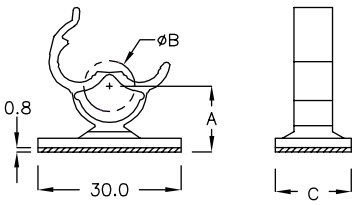

WITH LOCK FEATURE

PART NO	A	B CLOSE DIA	C	PACKAGE
FW-CD30	13.8	ø8.6	16.0	200

电线固定扣 CABLE CLAMP 6-30-3

- MATERIAL: NYLON 66(UL)
- FLAME CLASS: 94V-0/94V-2
- COLOR: NATURAL
- ADHESIVE TAPE: 3M
- ALSO CAN BE FASTENED WITH M4 SCREW

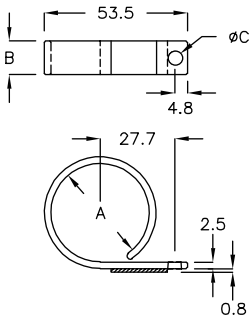

PART NO	A	B	C	PACKAGE
PCX-39M	ø36.9	12.6	ø4.9	100

电线固定座 TIE MOUNT 6-30-4

- MATERIAL: NYLON 66(UL)
- FLAME CLASS: 94V-0/94V-2
- COLOR: NATURAL
- ADHESIVE TAPE:3M
- ALSO CAN BE FASTENED WITH M4 SCREW

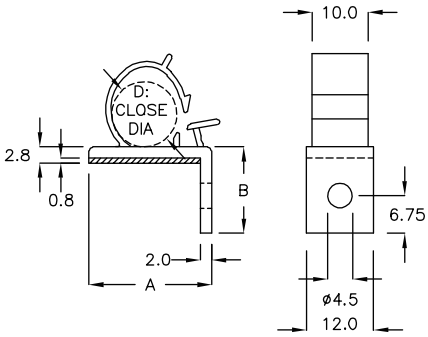

WITH LOCK FEATURE

PART NO	A	B	D	PACKAGE
LFW-3	22.0	15.5	ø11.7	200

电线固定座 TIE MOUNT 6-30-5

- MATERIAL: NYLON 66(UL)
- FLAME CLASS: 94V-0/94V-2
- COLOR: NATURAL
- ADHESIVE TAPE: 3M

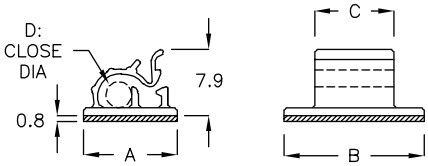

WITH LOCK FEATURE

PART NO	A	B	C	D	PACKAGE
FWZ-3A	11.3	18.5	11.2	ø3.4	500

电线固定座 TIE MOUNT 6-31-1

- MATERIAL: NYLON 66(UL)
- FLAME CLASS: 94V-0/94V-2
- COLOR: NATURAL
- ADHESIVE TAPE: 3M

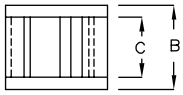

WITH LOCK FEATURE

PART NO	A	B	C	D	E	PACKAGE
FW-04S	22.0	16.0	10.0	ø11.7	18.6	200
FW-3	25.0	19.6	12.0	ø9.0	16.7	
FW-03A	19.0	19.0	9.0	ø6.8	13.6	
FW-3S	21.0	19.0	9.0	ø7.8	13.1	
FW-3L	21.6	16.8	12.0	ø10.4	15.8	
FW-4	29.8	19.8	14.7	ø12.6	27.2	100
FW-04L	33.5	24.8	16.2	ø19.0	31.0	

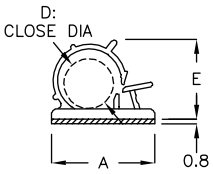

电线固定座 TIE MOUNT 6-31-2

- MATERIAL: NYLON 66(UL)
- FLAME CLASS: 94V-0/94V-2
- COLOR: NATURAL
- ADHESIVE TAPE: 3M

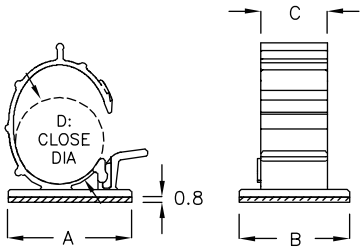

WITH LOCK FEATURE

PART NO	A	B	C	D	PACKAGE
FDD-28	28.0	25.0	15.0	ø19.5~ø20.0	100

电线固定座 TIE MOUNT 6-31-3

- MATERIAL: NYLON 66(UL)
- FLAME CLASS: 94V-0/94V-2
- COLOR: NATURAL
- ADHESIVE TAPE: 3M

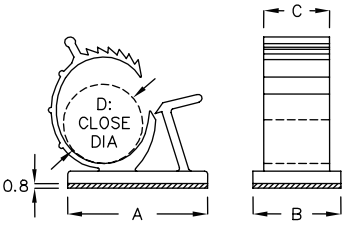

WITH LOCK FEATURE

PART NO	A	B	C	D CLOSE DIA	PACKAGE
FW-33	30.0	16.0	12.0	ø10.5~ø14.5	200
FW-33A	25.5	16.0	12.0	ø10.5~ø14.5	
FW-39KP	36.0	19.0	12.7	ø18.5~ø22.5	100
FW-35	38.2	20.0	12.9	ø14.5~ø18.5	
FW-39	38.8	20.0	12.9	ø18.5~ø22.5	

电线固定座 TIE MOUNT 6-31-4

- MATERIAL: NYLON 66(UL)
- FLAME CLASS: 94V-0/94V-2
- COLOR: NATURAL
- ADHESIVE TAPE: 3M

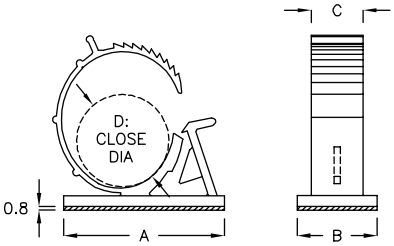

WITH LOCK FEATURE

PART NO	A	B	C	D	PACKAGE
FW-35C	35.0	19.0	12.9	ø27.0~ø29.0	100
FW-40	40.0	20.0	12.9	ø22.5~ø26.5	

电线固定座 TIE MOUNT 6-32-1

- MATERIAL: NYLON 66(UL)
- FLAME CLASS: 94V-0/94V-2
- COLOR: NATURAL
- ADHESIVE TAPE: 3M
- ALSO CAN BE FASTENED WITH M3 SCREW

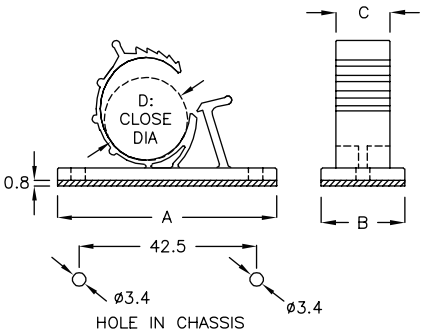

WITH LOCK FEATURE

PART NO	A	B	C	D	PACKAGE
FWP-33	52.5	20.0	13.0	ø10.5~13.5	200
FWP-52	52.5	20.0	13.0	ø14.5~17.5	100

电线固定座 TIE MOUNT 6-32-2

- MATERIAL: NYLON 66(UL)
- FLAME CLASS: 94V-0/94V-2
- COLOR: NATURAL
- ADHESIVE TAPE: 3M
- ALSO CAN BE FASTENED WITH M3 TAPPING SCREW

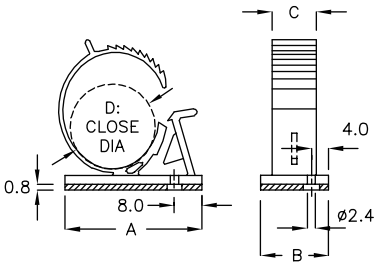

WITH LOCK FEATURE

PART NO	A	B	C	D	PACKAGE
FWP-40	39.9	19.9	12.9	ø22.5~ø26.5	100

电线固定座 WIRE MOUNT 6-32-3

- MATERIAL: NYLON 66(UL)
- FLAME CLASS: 94V-0/94V-2
- COLOR: NATURAL
- ADHESIVE TAPE: 3M
- ALSO CAN BE FASTENED WITH M3 COUNTERSUNK SCREW

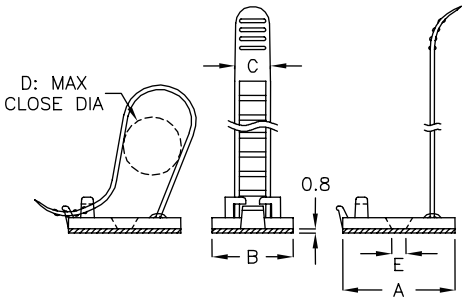

PART NO	A	B	C	D: MAX CLOSE DIA	E	PACKAGE
FWA-12	20.0	15.0	5.0	ø12.0	ø3.4	200
FWA-13	25.0	18.0	7.9	ø13.0	ø3.5	
FWA-17	25.0	18.0	7.9	ø17.0	ø3.5	
FWA-19	20.0	15.0	5.0	ø19.5	ø3.4	
FWA-21	25.0	18.0	8.1	ø18.5	ø3.5	
FWA-22	30.5	21.0	12.0	ø22.0	ø3.5	100
FWA-22C	31.8	21.0	12.0	ø22.0	ø3.6	
FWA-26	30.5	21.0	12.0	ø26.0	ø3.5	
FWA-32K	35.0	25.0	14.0	ø32.5	ø3.2	

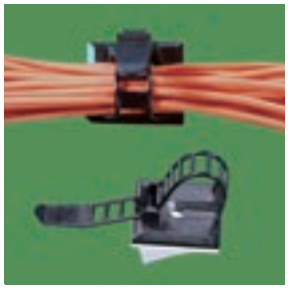

电线固定座 WIRE MOUNT 6-33-1

- MATERIAL: NYLON 66(UL)
- FLAME CLASS: 94V-0/94V-2
- COLOR: BLACK
- ADHESIVE TAPE: 3M
- ALSO CAN BE FASTENED WITH M3 COUNTERSUNK SCREW

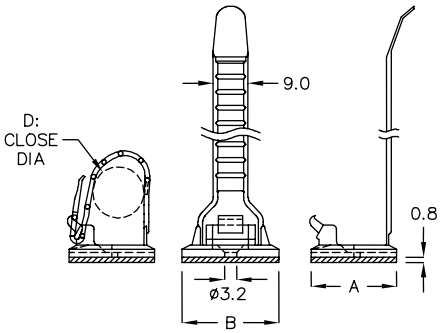

PART NO	A	B	D CLOSE DIA	PACKAGE
FWX-08	22.0	25.0	ø8.0~ø10.0	200
FWX-10	22.0	25.0	ø10.0~ø12.0	
FWX-15	22.0	25.0	ø17.0~ø18.0	
FWX-15A	22.0	25.0	ø18.5~ø19.5	

电线固定板 FLAT CABLE CLAMP 6-33-2

- MATERIAL: NYLON 66(UL)
- FLAME CLASS: 94V-0/94V-2
- COLOR: BLACK
- ADHESIVE TAPE: 3M
- ALSO CAN BE FASTENED WITH M3 SCREW

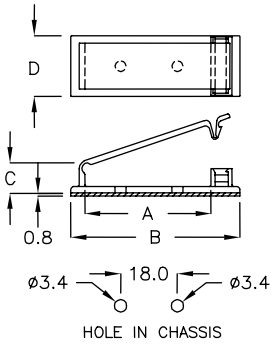

PART NO	A	B	C	D	PACKAGE
FCW-40GQ	40.0	53.5	11.2	19.3	100

排线固定板 FLAT CABLE CLAMP 6-33-3

- MATERIAL: NYLON 66(UL)
- FLAME CLASS: 94V-0/94V-2
- COLOR: NATURAL
- ADHESIVE TAPE: 3M
- ALSO CAN BE FASTENED WITH M3 SCREW

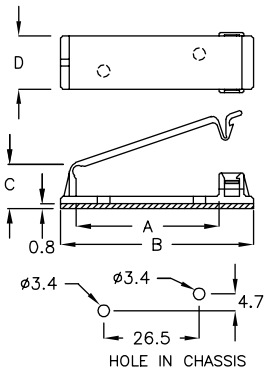

WITH LOCK FEATURE

PART NO	A	B	C	D	PACKAGE
FCW-40MH	39.7	53.5	11.7	14.7	100

电线固定板 CABLE CLAMP 6-33-4

- MATERIAL: NYLON 66(UL)
- FLAME CLASS: 94V-0/94V-2
- COLOR: NATURAL,BLACK
- ADHESIVE TAPE: 3M

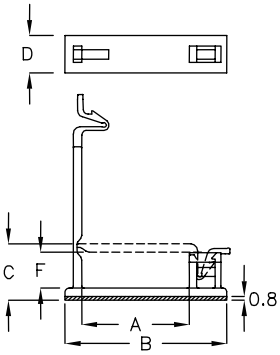

PART NO	A	B	C	D	F	PACKAGE
FCW-23GK	23.0	34.5	12.0	8.0	7.6	200

电线固定板 CABLE CLAMP 6-34-1

- MATERIAL: NYLON 66(UL)
- FLAME CLASS: 94V-0/94V-2
- COLOR: NATURAL
- ADHESIVE TAPE: 3M

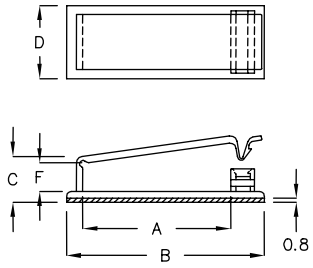

WITH LOCK FEATURE

PART NO	A	B	C	D	F	PACKAGE
FCW-4CK	4.7	12.0	8.6	9.5	5.0	1000
FCW-13RT	13.7	23.0	21.8	20.0	17.0	100
FCW-16A	16.7	26.0	27.9	20.0	23.6	
FCW-17HD	17.0	26.2	14.2	10.0	10.2	
FCW-35QT	21.6	35.0	17.6	15.0	13.0	
FCW-27A	26.9	38.0	16.4	15.0	12.5	
FCW-27KM	27.0	38.5	14.4	11.2	9.5	
FCW-27CS	27.0	38.5	14.4	15.0	9.5	
FCW-29	31.6	45.4	10.4	18.9	5.5	
FCW-30	32.0	45.7	12.2	19.2	7.0	
FCW-32MT	32.7	44.7	21.7	15.0	15.8	
FCW-31F	31.6	45.0	18.4	15.0	13.0	
FCW-35XR	35.0	48.9	11.5	13.0	6.5	
FCW-36CT	36.0	44.8	17.6	12.7	13.1	
FCW-40	39.7	53.5	13.1	19.2	7.7	
FCW-40K	39.7	53.5	15.3	19.3	10.0	
FCW-41	41.3	55.2	10.4	18.7	5.0	
FCW-41RK	41.4	55.2	10.4	18.8	5.0	
FCW-50	64.0	77.5	12.3	19.2	6.5	
FCW-50H	65.2	79.2	18.8	18.9	13.3	
FCW-52KT	52.2	61.0	13.4	12.7	8.8	
FCW-52A	52.6	66.5	15.8	19.8	10.1	

电线固定板 CABLE CLAMP 6-34-2

- MATERIAL: NYLON 66(UL)
- FLAME CLASS: 94V-0/94V-2
- COLOR: NATURAL
- ADHESIVE TAPE: 3M

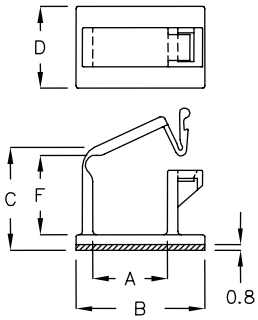

WITH LOCK FEATURE

PART NO	A	B	C	D	F	PACKAGE
FCW-11JM	11.0	19.0	15.9	12.0	11.8	200

电线固定板 CABLE CLAMP 6-34-3

- MATERIAL: NYLON 66(UL)
- FLAME CLASS: 94V-0/94V-2
- COLOR: NATURAL
- ADHESIVE TAPE: 3M

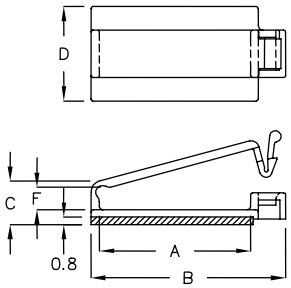

WITH LOCK FEATURE

PART NO	A	B	C	D	F	PACKAGE
FCW-16QS	16.0	20.6	4.3	10.0	2.0	500

电线固定板 CABLE CLAMP 6-35-1

- MATERIAL: NYLON 66(UL)
- FLAME CLASS: 94V-0/94V-2
- COLOR: NATURAL
- ADHESIVE TAPE: 3M

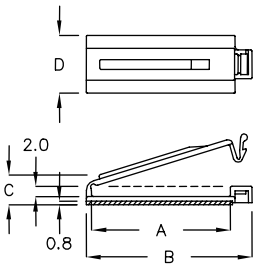

WITH LOCK FEATURE

PART NO	A	B	C	D	PACKAGE
FCW-16GR	16.0	20.6	5.3	10.0	200
FCW-24GR	24.0	28.6	6.2	10.0	
FCW-30GR	30.0	34.6	5.3	10.0	

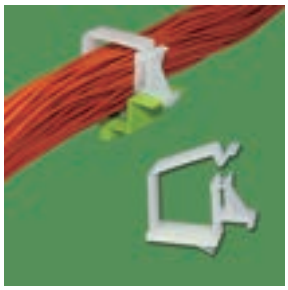

电线固定座 WIRE MOUNT 6-35-2

- MATERIAL: NYLON 66(UL)
- FLAME CLASS: 94V-0/94V-2
- COLOR: NATURAL
- ADHESIVE TAPE: 3M

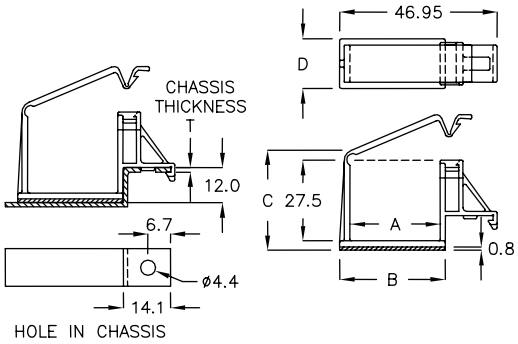

WITH LOCK FEATURE

PART NO	A	B	C	D	T CHASSIS THICKNESS	PACKAGE
FCWT-27QH	26.9	31.5	30.4	14.8	1.2	100

电线固定座 CABLE CLAMP 6-35-3

- MATERIAL: NYLON 66(UL)
- FLAME CLASS: 94V-0/94V-2
- COLOR: NATURAL
- ADHESIVE TAPE: 3M

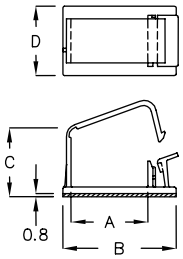

WITH LOCK FEATURE

PART NO	A	B	C	D	PACKAGE
FWT-17C	17.0	26.2	14.2	10.0	100
FWT-21	21.0	31.0	19.3	19.0	

电线固定座 CABLE CLAMP 6-35-4

- MATERIAL: NYLON 66(UL)
- FLAME CLASS: 94V-0/94V-2
- COLOR: NATURAL
- ADHESIVE TAPE: 3M

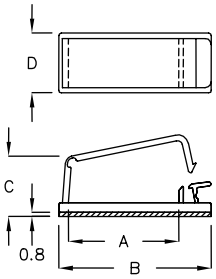

WITH LOCK FEATURE

PART NO	A	B	C	D	PACKAGE
FWT-25	31.6	45.0	18.8	19.05	100
FWT-25A	33.0	44.45	11.2	19.05	

电线固定座 CABLE CLAMP 6-36-1

- MATERIAL: NYLON 66(UL)
- FLAME CLASS: 94V-0/94V-2
- COLOR: BLACK
- ADHESIVE TAPE: 3M

WITH LOCK FEATURE

PART NO	A	B	C	D	PACKAGE
FWT-53C	53.9	66.7	22.5	15.0	100

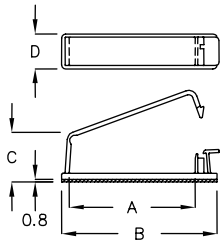

电线固定座 CABLE CLAMP 6-36-2

- MATERIAL: NYLON 66(UL)
- FLAME CLASS: 94V-0/94V-2
- COLOR: NATURAL
- ADHESIVE TAPE: 3M

WITH LOCK FEATURE

PART NO	A	B	C	D	PACKAGE
FCY-27SY	28.5	44.4	11.0	19.0	100

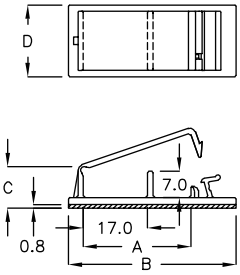

排线固定板 FLAT CABLE CLAMP 6-36-3

- MATERIAL: NYLON 66(UL)
- FLAME CLASS: 94V-0/94V-2
- COLOR: NATURAL
- ADHESIVE TAPE: 3M

PART NO	A	B	PACKAGE
FC-10N	10.4	18.8	500

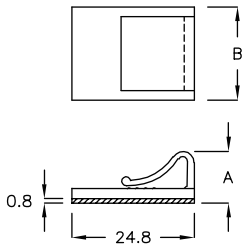

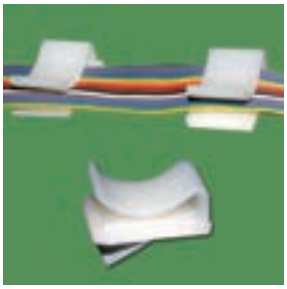

排线固定板 FLAT CABLE CLAMP 6-36-4

- MATERIAL: NYLON 66(UL)
- FLAME CLASS: 94V-0/94V-2
- COLOR: NATURAL
- ADHESIVE TAPE: 3M

PART NO	A	B	C	D	PACKAGE
FC-15N	10.5	19.0	15.0	25.0	200
FC-25N	10.5	25.0	23.0	25.2	

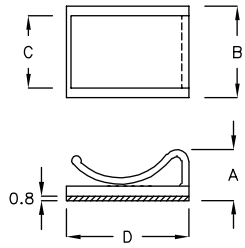

排线固定板 FLAT CABLE CLAMP 6-36-5

- MATERIAL: NYLON 66(UL)
- COLOR: GRAY
- ADHESIVE TAPE: 3M

PART NO	A	B	PACKAGE
FB-15A	10.3	15.0	1000

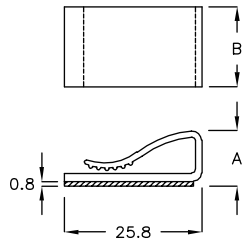

排线固定板 FLAT CABLE CLAMP 6-37-1

- MATERIAL: NYLON 66(UL)
- FLAME CLASS: 94V-0/94V-2
- COLOR: NATURAL
- ADHESIVE TAPE: 3M

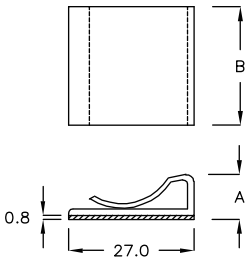

PART NO	A	B	PACKAGE
FC-25A	9.6	25.4	500

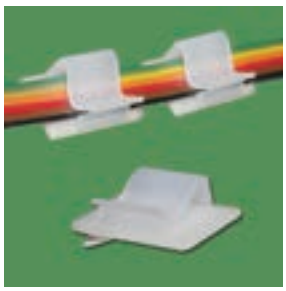

排线固定板 FLAT CABLE CLAMP 6-37-2

- MATERIAL: NYLON 66(UL)
- FLAME CLASS: 94V-0/94V-2
- COLOR: NATURAL
- ADHESIVE TAPE: 3M

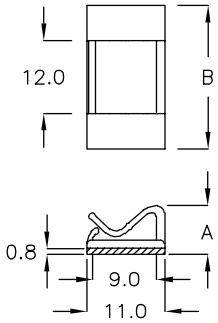

PART NO	A	B	PACKAGE
FCR-09	6.8	22.0	1000

排线固定板 FLAT CABLE CLAMP 6-37-3

- MATERIAL: NYLON 66(UL)
- FLAME CLASS: 94V-0/94V-2
- COLOR: NATURAL
- ADHESIVE TAPE: 3M
- ALSO CAN BE FASTENED WITH M3 SCREW

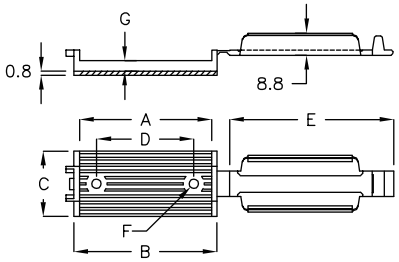

PART NO	A	B	C	D	E	F	G	SUITABLE CABLE	PACKAGE
FCM-50	53.0	57.3	26.0	39.0	64.6	2-ø3.8	4.1	40 PIN	100

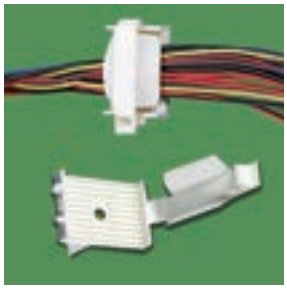

排线固定板 FLAT CABLE CLAMP 6-37-4

- MATERIAL: NYLON 66(UL)
- FLAME CLASS: 94V-0/94V-2
- COLOR: NATURAL
- ADHESIVE TAPE: 3M
- ALSO CAN BE FASTENED WITH M3 SCREW

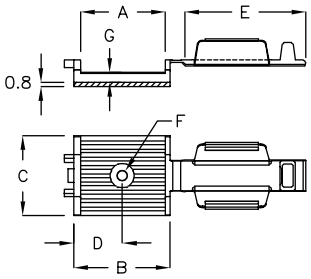

PART NO	A	B	C	D	E	F	G	SUITABLE CABLE	PACKAGE
FCM-26AM	26.6	29.7	25.0	14.85	37.9	ø3.8	3.0	16 PIN	100
FCM-30	30.5	34.5	25.4	17.5	42.0	ø3.8	3.1	24 PIN	
FCM-31	26.8	30.7	25.4	15.5	38.5	ø3.65	3.0	16 PIN	

排线固定板 FLAT CABLE CLAMP 6-38-1

- MATERIAL: NYLON 66(UL)
- FLAME CLASS: 94V-0/94V-2
- COLOR: NATURAL
- ADHESIVE TAPE: 3M
- ALSO CAN BE FASTENED WITH M3 SCREW

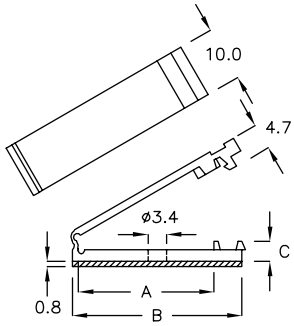

PART NO	A	B	C	SUITABLE CABLE	PACKAGE
FCM-25H	24.8	31.0	3.6	16 PIN	200

排线固定板 FLAT CABLE CLAMP 6-38-2

- MATERIAL: NYLON 66(UL)
- FLAME CLASS: 94V-0/94V-2
- COLOR: NATURAL
- ADHESIVE TAPE: 3M

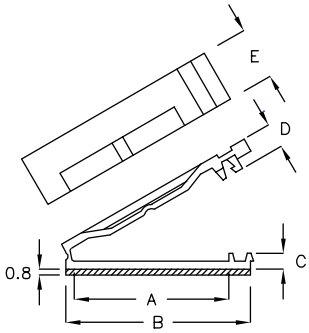

WITH LOCK FEATURE

PART NO	A	B	C	D	E	SUITABLE CABLE	PACKAGE
FCM-25S	22.0	28.0	3.0	4.7	10.0	15 PIN	200
FCM-25	29.3	36.5	3.0	4.7	10.0	20 PIN	
FCM-25M	55.8	61.2	4.0	4.7	15.0	40 PIN	100

排线固定板 FLAT CABLE CLAMP 6-38-3

- MATERIAL: NYLON 66(UL)
- FLAME CLASS: 94V-0/94V-2
- COLOR: NATURAL
- ADHESIVE TAPE: 3M

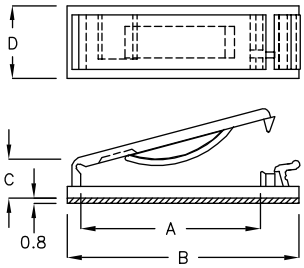

WITH LOCK FEATURE

PART NO	A	B	C	D	SUITABLE CABLE	PACKAGE
FCD-25	31.5	40.7	6.8	12.7	25 PIN	100
FCD-40	52.0	61.2	6.9	12.7	40 PIN	

排线固定板 FLAT CABLE CLAMP 6-38-4

- MATERIAL: NYLON 66(UL)
- FLAME CLASS: 94V-0/94V-2
- COLOR: BLACK
- ADHESIVE TAPE: 3M

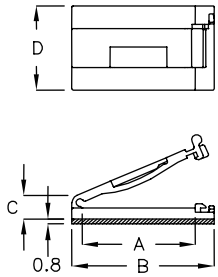

PART NO	A	B	C	D	SUITABLE CABLE	PACKAGE
FDQ-18	17.5	22.0	3.9	13.0	13 PIN	500

排线固定板 FLAT CABLE CLAMP 6-39-1

- MATERIAL: NYLON 66(UL)
- FLAME CLASS: 94V-0/94V-2
- COLOR: NATURAL
- ADHESIVE TAPE: 3M

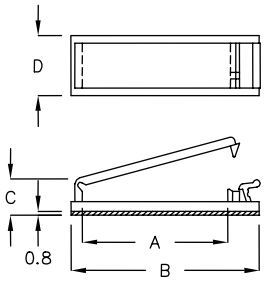

WITH LOCK FEATURE

PART NO	A	B	C	D	SUITABLE CABLE	PACKAGE
FCD−17	17.0	26.2	6.6	12.7	13 PIN	200
FCD−19GK	19.0	27.5	12.5	12.7	13 PIN	
FCD−19A	19.0	28.0	5.8	10.0	13 PIN	
FCD−21BH	21.5	30.0	13.5	12.7	13 PIN	100
FCD−26GK	26.5	35.0	8.2	10.0	20 PIN	
FCD−26EZ	26.5	35.0	13.5	12.7	20 PIN	
FCD−27	27.0	36.0	10.8	12.7	20 PIN	
FCD−27C	27.0	36.0	13.8	12.7	20 PIN	
FCD−27F	27.0	36.0	16.5	15.0	20 PIN	
FCD−29KT	29.5	38.0	13.5	12.7	20 PIN	
FCD−31AN	31.0	39.5	7.5	12.7	25 PIN	
FCD−25A	31.1	40.4	7.9	12.7	25 PIN	
FCD−50	50.0	59.0	10.8	12.7	40 PIN	
FCD−40H	52.0	61.2	7.6	12.7	40 PIN	
FCD−60H	62.8	72.2	7.9	12.9	60 PIN	

排线固定板 FLAT CABLE CLAMP 6-39-2

- MATERIAL: NYLON 66(UL)
- FLAME CLASS: 94V-0/94V-2
- COLOR: NATURAL
- ADHESIVE TAPE: 3M

＊加中隔板

＊ WITH ISOLATE BOARD

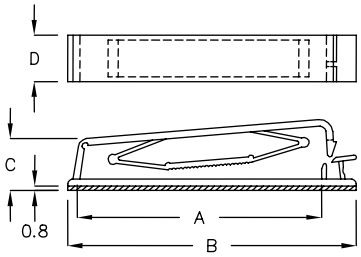

WITH LOCK FEATURE

PART NO	A	B	C	D	SUITABLE CABLE	PACKAGE
FCC−25C	32.0	45.0	16.0	19.0	25 PIN	100
＊FCC−25K	31.3	40.7	7.2	10.0	25 PIN	
FCC−30	32.0	45.0	16.6	18.6	30 PIN	
FCC−40	54.0	67.0	16.6	15.8	40 PIN	
FCC−40C	53.8	66.0	12.8	10.2	40 PIN	
＊FCC−41	54.0	67.0	16.6	15.8	40 PIN	
＊FCC−41A	53.7	66.7	17.0	12.8	40 PIN	
FCC−50	65.2	78.4	16.6	18.8	50 PIN	
FCC−50F	63.7	76.2	15.9	19.0	50 PIN	
＊FCC−64	83.5	97.5	16.6	16.0	64 PIN	

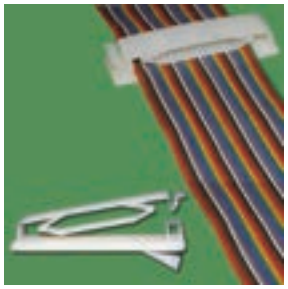

排线固定板 FLAT CABLE CLAMP 6-40-1

- MATERIAL: NYLON 66(UL)
- FLAME CLASS: 94V-0/94V-2
- COLOR: NATURAL
- ADHESIVE TAPE: 3M

WITH LOCK FEATURE

PART NO	A	B	C	D	SUITABLE CABLE	PACKAGE
FWY-50	64.0	77.0	12.6	20.0	50 PIN	100

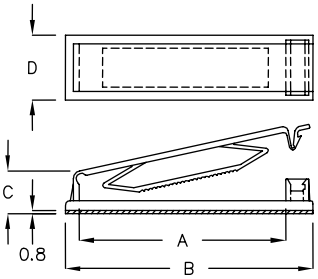

排线固定板 FLAT CABLE CLAMP 6-40-2

- MATERIAL: NYLON 66(UL)
- FLAME CLASS: 94V-0/94V-2
- COLOR: NATURAL
- ADHESIVE TAPE: 3M

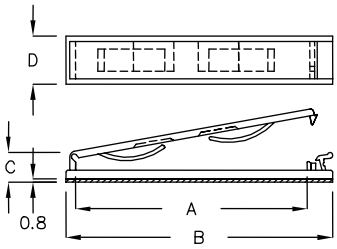

WITH LOCK FEATURE

PART NO	A	B	C	D	SUITABLE CABLE	PACKAGE
FCD-60A	62.8	72.2	7.9	12.9	45 PIN	100

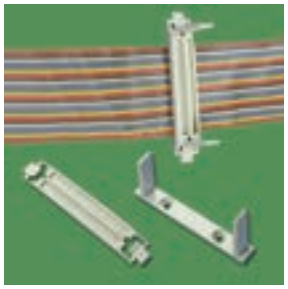

排线固定板 FLAT CABLE CLAMP 6-40-3

- MATERIAL: NYLON 66(UL)
- FLAME CLASS: 94V-0/94V-2
- COLOR: NATURAL
- ADHESIVE TAPE: 3M
- ALSO CAN BE FASTENED WITH M4 SCREW

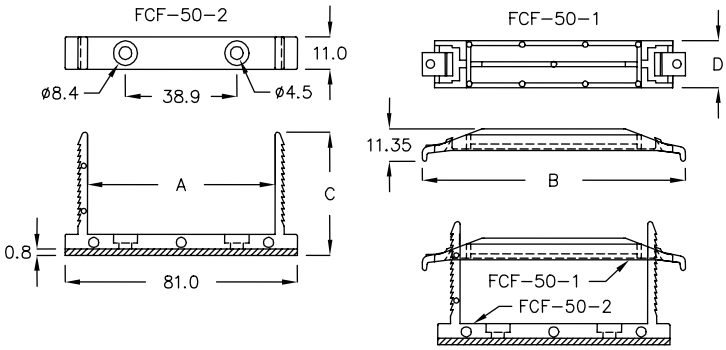

PART NO	A	B	C	D	SUITABLE CABLE	PACKAGE
FCF-50	65.4	91.8	41.1	16.0	50 PIN X30	100

排线固定板 FLAT CABLE CLAMP 6-40-4

- MATERIAL: NYLON 66(UL)
- FLAME CLASS: 94V-0/94V-2
- COLOR: NATURAL
- ADHESIVE TAPE: 3M
- ALSO CAN BE FASTENED WITH M5 COUNTERSUNK SCREW

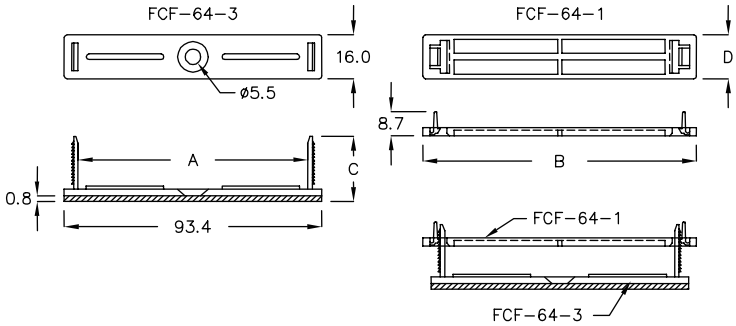

PART NO	A	B	C	D	SUITABLE CABLE	PACKAGE
FCF-64	83.4	99.2	22.7	16.1	64 PIN X12	100

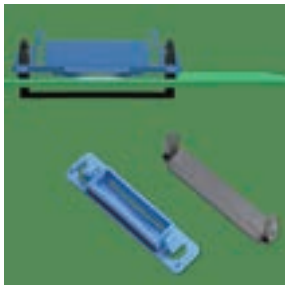

固定座 MOUNT 6-41-1

- MATERIAL: NYLON 66(UL)
- FLAME CLASS: 94V-0/94V-2
- COLOR: BLACK,BLUE

NEW

	PART NO	A	B	C	D	PACKAGE
★	FCFA-32W	32.3	40.0	14.5	9.4	200

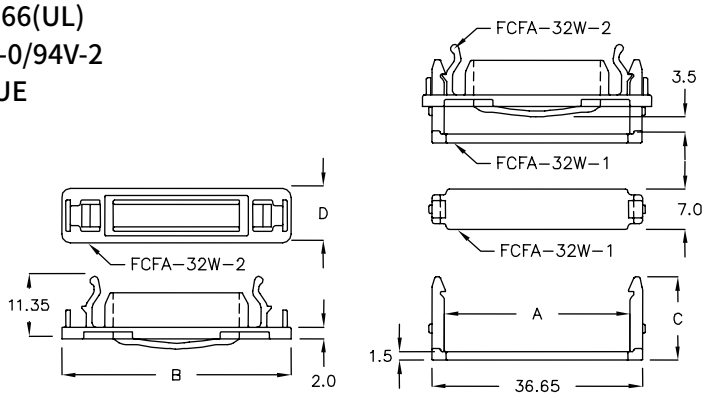

隔离束线座 WIRE SADDLE 6-41-2

- MATERIAL: NYLON 66(UL)
- FLAME CLASS: 94V-0/94V-2
- COLOR: NATURAL

PART NO	A	B	T CHASSIS THICKNESS	PACKAGE
CID-01	10.0	1.6	1.6	2000

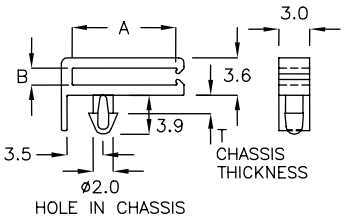

隔离束线座 WIRE MOUNT 6-41-3

- MATERIAL: NYLON 66(UL)
- FLAME CLASS: 94V-0/94V-2
- COLOR: NATURAL

PART NO	A	B	C	D	SUITABLE DIA	PACKAGE
FBF-01	9.9	2.9	7.3	12.3	ø1.5X3	2000
FBF-3A	9.9	3.75	7.3	12.3	ø2.0X3	
FBF-4C	11.9	3.75	9.3	14.3	ø2.0X4	

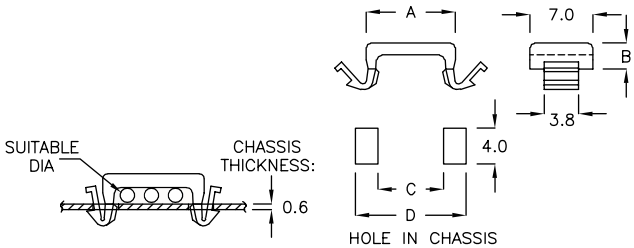

隔离束线座 WIRE SADDLE 6-41-4

- MATERIAL: NYLON 66(UL)
- FLAME CLASS: 94V-0/94V-2
- COLOR: NATURAL

PART NO	A	B	T CHASSIS THICKNESS	PACKAGE
CSF-1MK	1.3	2.8	1.2	2000
CSF-1KC	1.3	2.8	1.6	

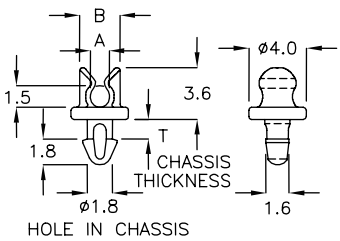

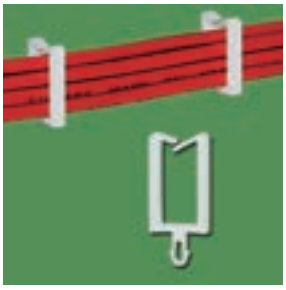

隔离束线座 WIRE SADDLE 6-41-5

- MATERIAL: NYLON 66(UL)
- FLAME CLASS: 94V-0/94V-2
- COLOR: NATURAL

PART NO	A	B	D	E	T MAXIMUM THICKNESS	PACKAGE
CHT-4GF	4.3	6.7	8.5	1.75	2.2	2000

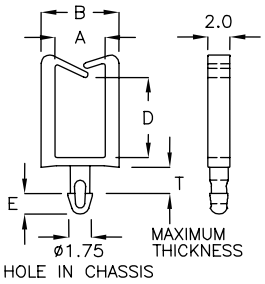

隔离束线座 WIRE SADDLE 6-42-1

- MATERIAL: NYLON 66(UL)
- FLAME CLASS: 94V-0/94V-2
- COLOR: NATURAL

PART NO	A	B	D	T MAXIMUM THICKNESS	PACKAGE
CMC–3A	4.4	6.9	3.0	1.6	2000

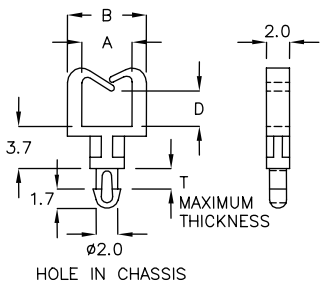

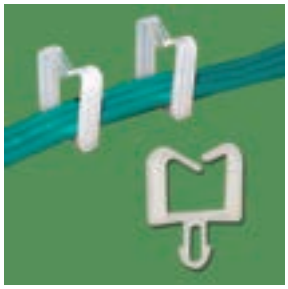

隔离束线座 WIRE SADDLE 6-42-2

- MATERIAL: NYLON 66(UL)
- FLAME CLASS: 94V-0/94V-2
- COLOR: NATURAL

PART NO	A	B	D	E	T MAXIMUM THICKNESS	PACKAGE
CH–1MR	3.4	5.8	3.0	1.8	1.2	2000
CH–01K	3.4	5.8	3.3	1.9	1.6	
CH–01F	4.3	6.9	3.1	1.9	1.6	
CH–02F	4.4	6.9	3.1	1.9	2.5	
CH–5TA	4.4	6.9	5.1	1.8	2.5	
CH–01H	5.2	7.8	5.8	1.9	1.6	

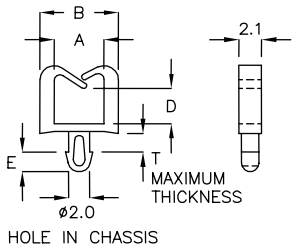

电线固定座 WIRE MOUNT 6-42-3

- MATERIAL: NYLON 66(UL)
- FLAME CLASS: 94V-0/94V-2
- COLOR: NATURAL

PART NO	A	T CHASSIS THICKNESS	PACKAGE
CMRW–6K	6.3	1.0	2000

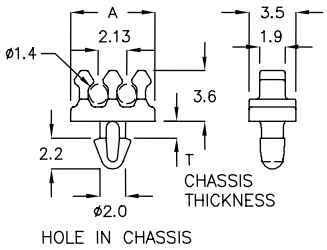

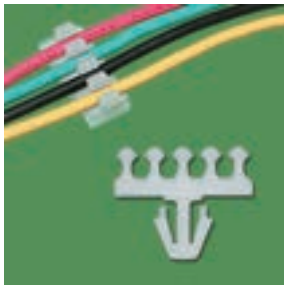

电线固定座 WIRE MOUNT 6-42-4

- MATERIAL: NYLON 66(UL)
- FLAME CLASS: 94V-0/94V-2
- COLOR: NATURAL

PART NO	A	T CHASSIS THICKNESS	PACKAGE
CMRT–10A	10.0	1.6	1000

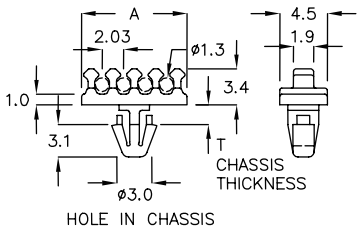

电线固定座 WIRE MOUNT 6-42-5

- MATERIAL: NYLON 66(UL)
- FLAME CLASS: 94V-0/94V-2
- COLOR: NATURAL

PART NO	A	T CHASSIS THICKNESS	PACKAGE
CMRZ–6A	8.0	1.5~1.6	2000

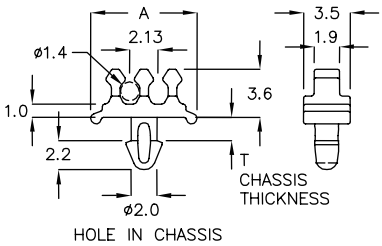

隔离束线座 WIRE SADDLE 6-43-1

- MATERIAL: NYLON 66(UL)
- FLAME CLASS: 94V-0/94V-2
- COLOR: NATURAL

PART NO	A	B	T MAXIMUM THICKNESS	PACKAGE
CJA–1A	5.4	6.8	2.0	2000

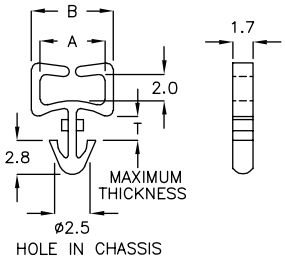

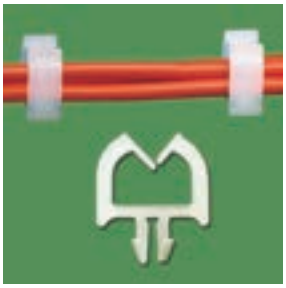

隔离束线座 WIRE SADDLE 6-43-2

- MATERIAL: NYLON 66(UL)
- FLAME CLASS: 94V-0/94V-2
- COLOR: NATURAL

E154548(S)

PART NO	A	B	T CHASSIS THICKNESS	PACKAGE
CH–01S	7.4	10.0	1.2~1.6	2000

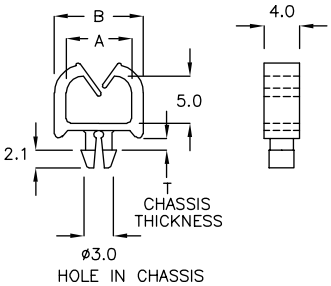

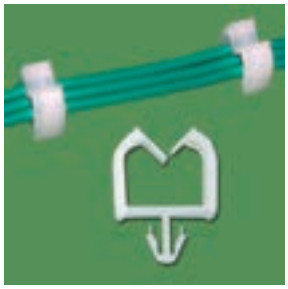

隔离束线座 WIRE SADDLE 6-43-3

- MATERIAL: NYLON 66(UL)
- FLAME CLASS: 94V-0/94V-2
- COLOR: NATURAL

E154548(S)

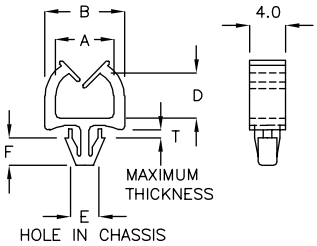

PART NO	A	B	D	E HOLE IN CHASSIS	F	UL	T MAXIMUM THICKNESS	PACKAGE
CH–1HK	8.2	10.6	6.9	ø2.75	3.0		1.6	2000
CH–01B	8.2	10.6	6.9	ø3.0	3.1		1.6	
CH–1BK	8.3	10.7	6.9		2.1		1.6	
CH–01C	7.4	10.0	5.0		2.2		1.6	
CH–1FW	6.8	9.3	5.0		2.8		1.6	
CH–01M	6.5	9.0	5.0		3.1	UL	0.8	
CH–01P	7.4	10.0	5.3		2.2		2.0	
CH–1PD	10.6	13.0	6.0		2.5		1.6	
CH–01U	8.3	10.7	7.0		2.5		1.6	
CH–01Q	6.6	9.0	4.9	ø3.5	3.0		1.0	
CH–01W	6.6	9.0	4.5		3.2		1.8	
CH–01N	9.0	11.6	5.3		2.7		1.2	

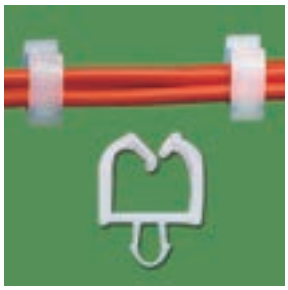

隔离束线座 WIRE SADDLE 6-43-4

- MATERIAL: NYLON 66(UL)
- FLAME CLASS: 94V-0/94V-2
- COLOR: NATURAL

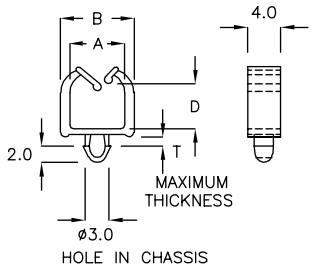

PART NO	A	B	D	T MAXIMUM THICKNESS	PACKAGE
CH–01A	6.7	9.0	5.5	1.2	2000
CH–01J	6.7	9.0	5.0	1.6	
CH–1AM	6.7	9.2	5.45	0.8	

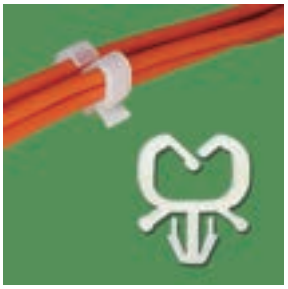

电线固定座 WIRE MOUNT 6-44-1

- MATERIAL: NYLON 66(UL)
- FLAME CLASS: 94V-0/94V-2
- COLOR: NATURAL

PART NO	A	B	T CHASSIS THICKNESS	PACKAGE
CZC-7D	7.2	9.7	0.6~1.6	1000

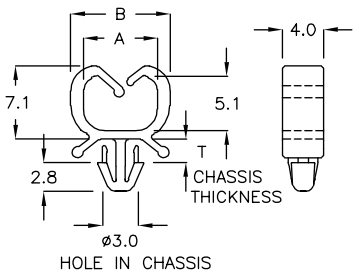

隔离束线座 WIRE SADDLE 6-44-2

- MATERIAL: NYLON 66(UL)
- FLAME CLASS: 94V-0/94V-2
- COLOR: NATURAL

PART NO	A	T CHASSIS THICKNESS	PACKAGE
CMA-4A	6.7	1.0~2.0	1000

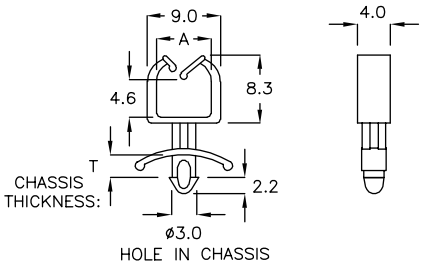

电线固定座 WIRE MOUNT 6-44-3

- MATERIAL: NYLON 66(UL)
- FLAME CLASS: 94V-0/94V-2
- COLOR: NATURAL

PART NO	A	C	PACKAGE
PCS-4A	6.6	5.0	2000
PCS-5A	6.6	3.0	

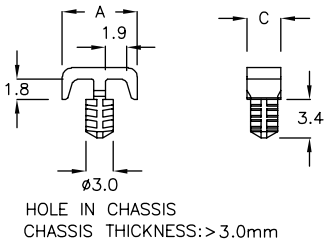

电线固定座 WIRE MOUNT 6-44-4

- MATERIAL: NYLON 66(UL)
- FLAME CLASS: 94V-0/94V-2
- COLOR: NATURAL

PART NO	A	B	PACKAGE
PCS-6A	10.0	3.0	2000

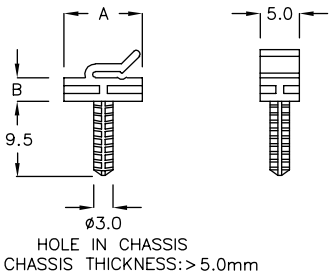

电线固定座 WIRE MOUNT 6-44-5

- MATERIAL: NYLON 66(UL)
- FLAME CLASS: 94V-0/94V-2
- COLOR: NATURAL

PART NO	A	B	T CHASSIS THICKNESS	PACKAGE
PCS-1A	6.6	1.8	2.0	2000

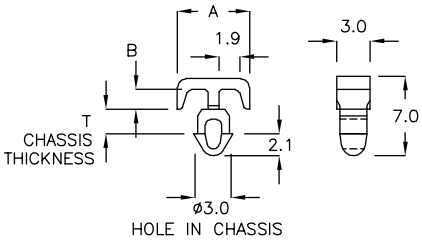

电线固定座 WIRE MOUNT 6-45-1

- MATERIAL: NYLON 66(UL)
- FLAME CLASS: 94V-0/94V-2
- COLOR: NATURAL

PART NO	A	B	T CHASSIS THICKNESS	PACKAGE
PCS-3A	6.6	1.8	2.0	2000

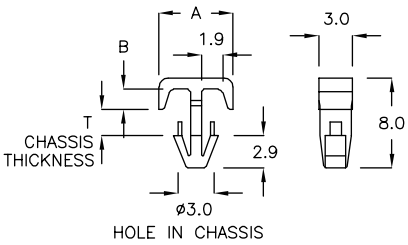

隔离束线座 WIRE SADDLE 6-45-2

- MATERIAL: NYLON 66(UL)
- FLAME CLASS: 94V-0/94V-2
- COLOR: NATURAL

WITH LOCK FEATURE

PART NO	A	C	T CHASSIS THICKNESS	PACKAGE
CHR-05	11.1	4.0	0.6~2.5	500

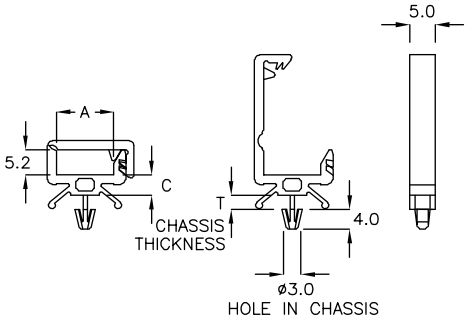

隔离束线座 WIRE SADDLE 6-45-3

- MATERIAL: NYLON 66(UL)
- FLAME CLASS: 94V-0/94V-2
- COLOR: NATURAL

PART NO	A	B	T CHASSIS THICKNESS	PACKAGE
CZH-2H	2.6	5.0	0.8~1.0	2000

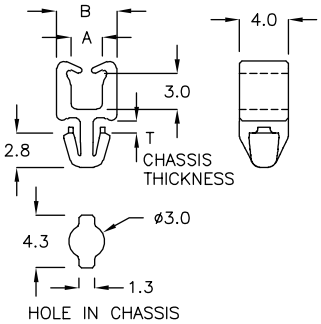

隔离束线座 WIRE SADDLE 6-45-4

- MATERIAL: NYLON 66(UL)
- FLAME CLASS: 94V-0/94V-2
- COLOR: NATURAL

Built -In Anti-Spin Function

PART NO	A	C	T CHASSIS THICKNESS	PACKAGE
TDD-4PA	6.0	4.2	0.6~1.6	500

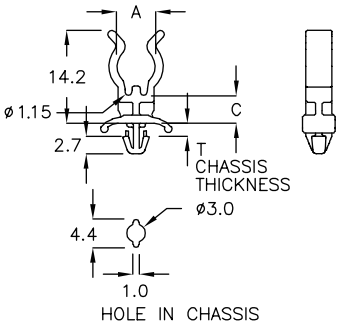

隔离束线座 WIRE SADDLE 6-45-5

- MATERIAL: NYLON 66(UL)
- FLAME CLASS: 94V-0/94V-2
- COLOR: NATURAL

Built -In Anti-Spin Function

PART NO	A	T CHASSIS THICKNESS	PACKAGE
TDF-12CM	ø1.0	1.6~2.4	500

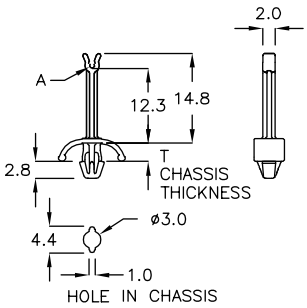

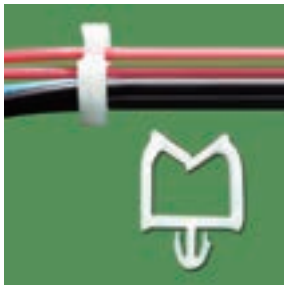

隔离束线座 WIRE SADDLE 6-46-1

- MATERIAL: NYLON 66(UL)
- FLAME CLASS: 94V-0/94V-2
- COLOR: NATURAL

PART NO	A	B	D	T CHASSIS THICKNESS	PACKAGE
CH-01Y	8.8	12.0	8.5	1.0~1.6	2000

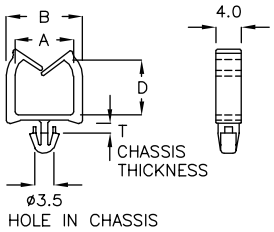

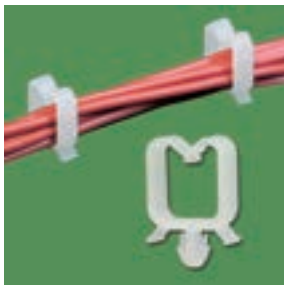

隔离束线座 WIRE SADDLE 6-46-2

- MATERIAL: NYLON 66(UL)
- FLAME CLASS: 94V-0/94V-2
- COLOR: NATURAL

PART NO	A	B	T CHASSIS THICKNESS	PACKAGE
CZB-9C	9.5	12.1	0.6~1.6	500

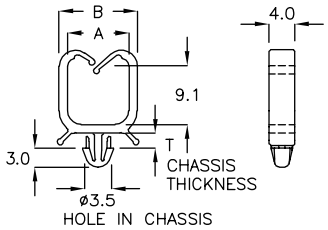

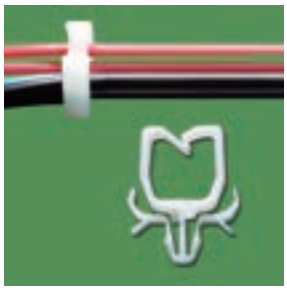

隔离束线座 WIRE SADDLE 6-46-3

- MATERIAL: NYLON 66(UL)
- FLAME CLASS: 94V-0/94V-2
- COLOR: NATURAL

PART NO	A	B	T MAXIMUM THICKNESS	PACKAGE
CZA-7A	7.5	9.5	1.5	1000

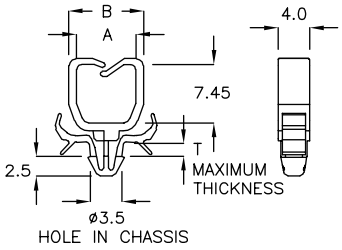

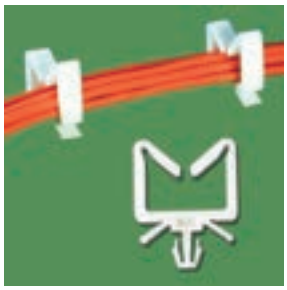

隔离束线座 WIRE SADDLE 6-46-4

- MATERIAL: NYLON 66(UL)
- FLAME CLASS: 94V-0/94V-2
- COLOR: NATURAL

PART NO	A	B	T CHASSIS THICKNESS	PACKAGE
CZR-12A	12.8	16.0	1.2~2.0	500

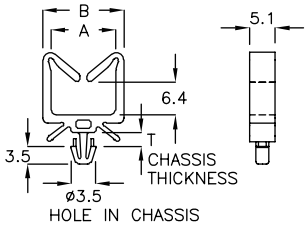

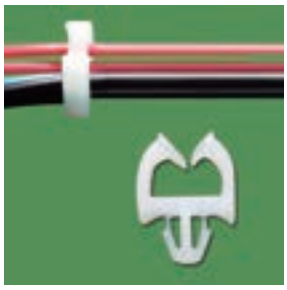

隔离束线座 WIRE SADDLE 6-46-5

- MATERIAL: NYLON 66(UL)
- FLAME CLASS: 94V-0/94V-2
- COLOR: NATURAL

PART NO	A	B	T CHASSIS THICKNESS	PACKAGE
CH-1QF	6.6	9.0	0.8~1.0	2000

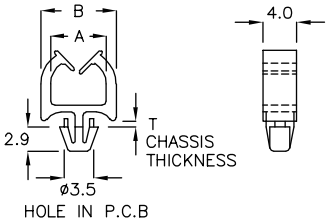

隔离束线座 WIRE SADDLE 6-47-1

- MATERIAL: NYLON 66(UL)
- FLAME CLASS: 94V-0/94V-2
- COLOR: NATURAL

WITH LOCK FEATURE

PART NO	A	T CHASSIS THICKNESS	PACKAGE
CZF-6A	5.1	0.8~2.0	1000

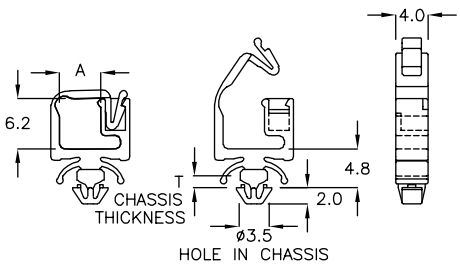

隔离束线座 WIRE SADDLE 6-47-2

- MATERIAL: NYLON 66(UL)
- FLAME CLASS: 94V-0/94V-2
- COLOR: BLACK

WITH LOCK FEATURE

PART NO	A	T CHASSIS THICKNESS	PACKAGE
CZX-18K	18.5	2.0~3.0	500

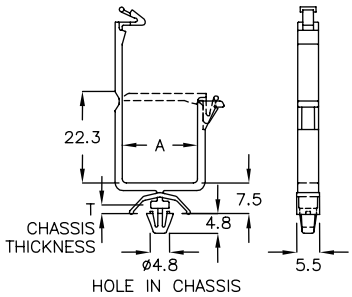

隔离束线座 WIRE SADDLE 6-47-3

- MATERIAL: NYLON 66(UL)
- FLAME CLASS: 94V-0/94V-2
- COLOR: NATURAL

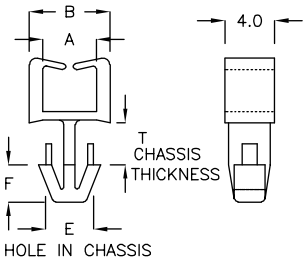

PART NO	A	B	T CHASSIS THICKNESS	E HOLE IN CHASSIS	F	PACKAGE
CH-01L	4.3	6.5	2.8~3.0	ø3.5	3.0	2000
CH-1LA	4.3	6.5	0.9~1.1	ø3.6	3.0	
CH-1LB	4.3	6.5	3.8~4.0	ø3.6	3.0	
CH-01D	4.5	6.5	4.0~4.4	ø3.5	3.1	
CH-1KP	4.3	6.5	0.9~1.1	ø3.6	3.0	

隔离束线座 WIRE SADDLE 6-47-4

- MATERIAL: NYLON 66(UL)
- FLAME CLASS: 94V-0/94V-2
- COLOR: NATURAL

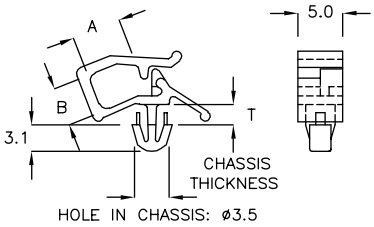

PART NO	A	B	T CHASSIS THICKNESS	PACKAGE
CH-03	5.5	4.3	1.2~2.0	1000
CH-03F	4.2	2.6	1.6~2.4	
CH-03S	4.2	2.8	1.2~2.0	

隔离束线座 WIRE SADDLE 6-48-1

- MATERIAL: NYLON 66(UL)
- FLAME CLASS: 94V-0/94V-2
- COLOR: NATURAL

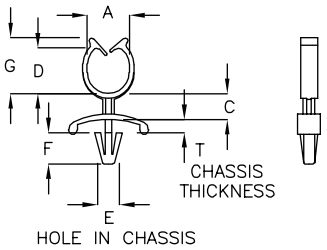

PART NO	A	C	D	E HOLE IN CHASSIS	F	G	T CHASSIS THICKNESS	PACKAGE
TDA-4A	7.4	4.5	8.0	ø3.3	5.5	9.7	0.8~1.8	500
TDA-10	5.6	10.0	5.2	ø3.5	4.0	7.0	0.8~1.6	
TDA-10F	5.6	10.0	5.2	ø3.5	4.0	7.0	1.4~2.2	
TDA-13	7.4	13.0	8.0	ø3.5	4.2	9.7	0.6~1.6	
TDA-13C	7.4	13.0	8.0	ø3.5	3.1	9.7	0.6~1.6	

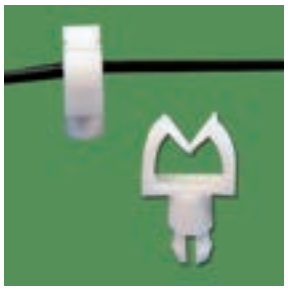

隔离束线座 WIRE SADDLE 6-48-2

- MATERIAL: NYLON 66(UL)
- FLAME CLASS: 94V-0/94V-2
- COLOR: NATURAL

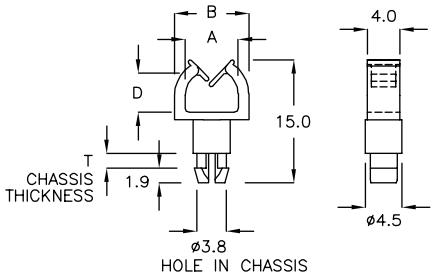

PART NO	A	B	T CHASSIS THICKNESS	D	PACKAGE
CH-04A	6.5	9.1	1.4~1.6	4.8	1000

隔离束线座 WIRE SADDLE 6-48-3

- MATERIAL: NYLON 66(UL)
- FLAME CLASS: 94V-0/94V-2
- COLOR: NATURAL

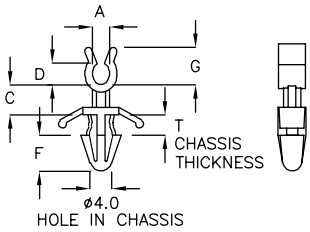

PART NO	A	C	D	F	G	T CHASSIS THICKNESS	PACKAGE
CS-04A	2.3	4.0	2.9	4.9	5.0	1.6~2.4	1000
CS-04C	2.0	4.5	2.0	4.8	5.0	1.6~2.4	
CS-10D	3.6	8.0	4.1	5.0	6.0	0.8~1.0	500

隔离束线座 WIRE SADDLE 6-48-4

- MATERIAL: NYLON 66(UL)
- FLAME CLASS: 94V-0/94V-2
- COLOR: NATURAL

WITH LOCK FEATURE

PART NO	A	C	T CHASSIS THICKNESS	PACKAGE
CZS-4FG	4.5	8.2	2.0~2.7	500
CZS-4RK	4.5	8.8	2.7~3.6	

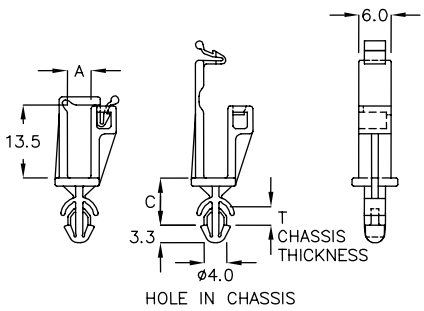

隔离束线座 WIRE SADDLE 6-49-1

- MATERIAL: NYLON 66(UL)
- FLAME CLASS: 94V-0/94V-2
- COLOR: NATURAL

Built –In Anti–Spin Function

PART NO	A	C	T CHASSIS THICKNESS	PACKAGE
CS–01C	ø3.3	3.2	0.8~1.2	2000
CS–1DK	ø4.2	3.4	0.8~1.2	

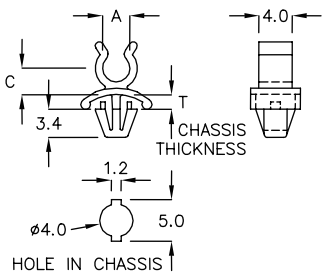

隔离束线座 WIRE SADDLE 6-49-2

- MATERIAL: NYLON 66(UL)
- FLAME CLASS: 94V-0/94V-2
- COLOR: NATURAL

PART NO	A	C	L	T CHASSIS THICKNESS	PACKAGE
2CS–2WQ	3.95	2.85	12.0	1.0~1.5	500
2CS–2YR	3.95	2.85	13.5	1.0~2.0	

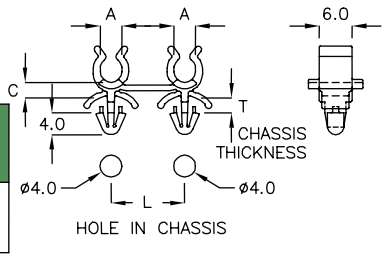

电线固定座 WIRE MOUNT 6-49-3

- MATERIAL: NYLON 66(UL)
- FLAME CLASS: 94V-0/94V-2
- COLOR: NATURAL
- ADHESIVE TAPE: 3M

PART NO	A	L	PACKAGE
CMZ–17K	4.0	15.2	500

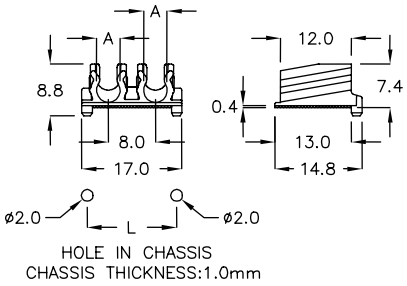

隔离束线座 WIRE SADDLE 6-49-4

- MATERIAL: POM
- FLAME CLASS: 94HB
- COLOR: NATURAL

PART NO	A	T CHASSIS THICKNESS	PACKAGE
CTX–46K	4.0	1.0~1.5	200

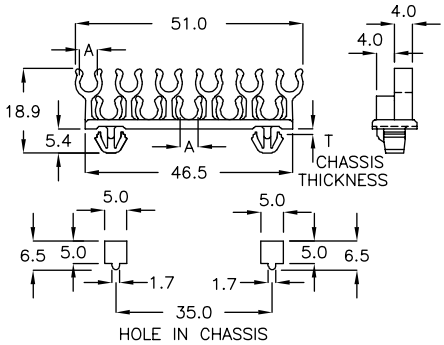

隔离束线座 WIRE SADDLE 6-49-5

- MATERIAL: NYLON 66(UL)
- FLAME CLASS: 94V-0/94V-2
- COLOR: NATURAL

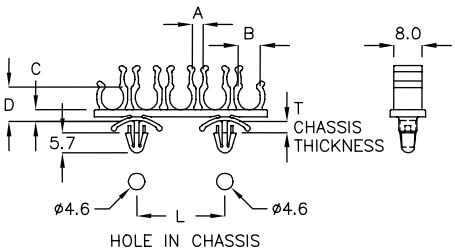

PART NO	A	B	C	D	L	T CHASSIS THICKNESS	PACKAGE
CTX–49DW	3.0	6.3	3.3	9.75	25.0	0.8~2.0	200

隔离束线座 WIRE SADDLE 6-50-1

- MATERIAL: NYLON 66(UL)
- FLAME CLASS: 94V-0/94V-2
- COLOR: NATURAL

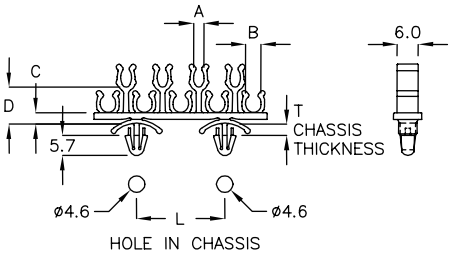

PART NO	A	B	C	D	L	T CHASSIS THICKNESS	PACKAGE
CTX-49RC	3.0	4.4	3.3	10.5	25.0	0.8~2.0	200

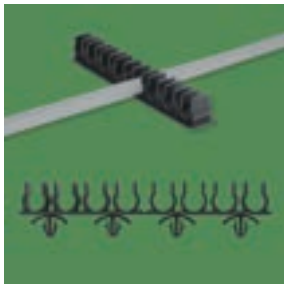

隔离束线座 WIRE SADDLE 6-50-2

- MATERIAL: NYLON 66(UL)
- FLAME CLASS: 94V-0/94V-2
- COLOR: BLACK

NEW

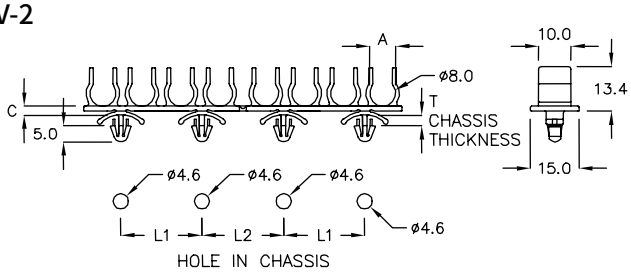

PART NO	A	C	L1	L2	T CHASSIS THICKNESS	PACKAGE
★ CTX-98A	8.0	2.8	25.0	25.2	1.2~2.0	200

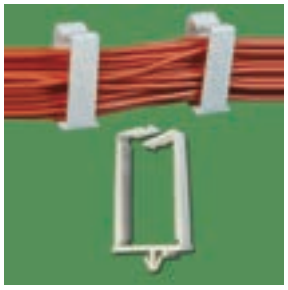

隔离束线座 WIRE SADDLE 6-50-3

- MATERIAL: NYLON 66(UL)
- FLAME CLASS: 94V-0/94V-2
- COLOR: NATURAL

Built-In Anti-Spin Function

PART NO	A	T CHASSIS THICKNESS	PACKAGE
CMK-15Q	15.0	1.4~1.7	100

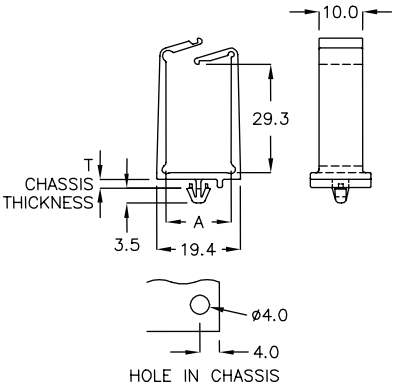

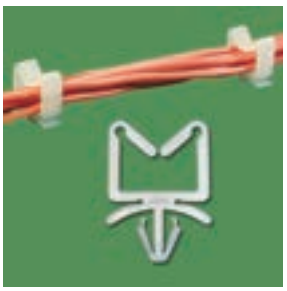

隔离束线座 WIRE SADDLE 6-50-3

- MATERIAL: NYLON 66(UL)
- FLAME CLASS: 94V-0/94V-2
- COLOR: NATURAL

Built-In Anti-Spin Function

PART NO	A	C	T MAXIMUM THICKNESS	PACKAGE
CZL-10JY	10.9	2.35	1.6	500

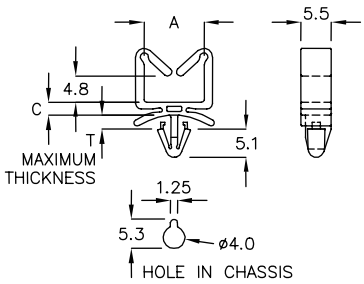

隔离束线座 WIRE SADDLE 6-50-4

- MATERIAL: NYLON 66(UL)
- FLAME CLASS: 94V-0/94V-2
- COLOR: BLACK

PART NO	A	D	PACKAGE
CUK-12ST	12.4	10.2	500

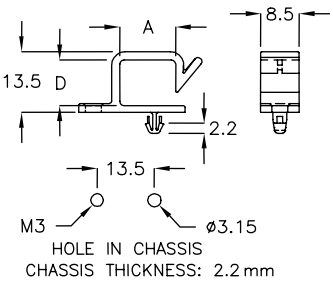

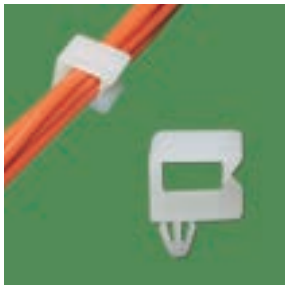

隔离束线座 WIRE SADDLE 6-51-1

- MATERIAL: NYLON 66(UL)
- FLAME CLASS: 94V-0/94V-2
- COLOR: NATURAL

PART NO	A	B	D	T CHASSIS THICKNESS	PACKAGE
CBG-6PK	7.3	11.0	6.2	1.6	1000

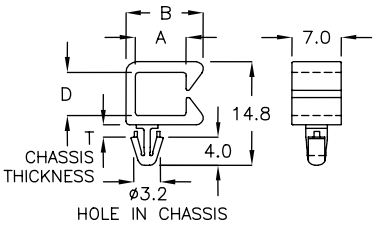

隔离束线座 WIRE SADDLE 6-51-2

- MATERIAL: NYLON 66(UL)
- FLAME CLASS: 94V-0/94V-2
- COLOR: BLACK

PART NO	A	T CHASSIS THICKNESS	PACKAGE
CSA-5K	5.3	1.6	1000

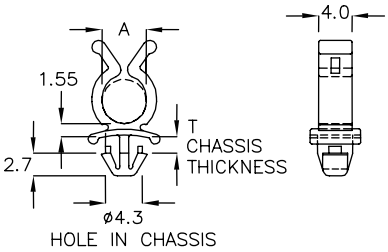

隔离束线座 WIRE SADDLE 6-51-3

- MATERIAL: NYLON 66(UL)
- FLAME CLASS: 94V-0/94V-2
- COLOR: NATURAL

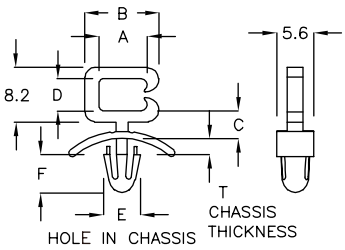

PART NO	A	B	C	D	E	F	T CHASSIS THICKNESS	PACKAGE
CHM-01	7.3	11.3	4.4	4.8	ø4.5	6.0	0.8~1.8	500

隔离束线座 WIRE SADDLE 6-51-4

- MATERIAL: NYLON 66(UL)
- FLAME CLASS: 94V-0/94V-2
- COLOR: NATURAL

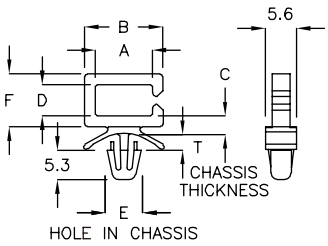

PART NO	A	B	C	D	E	F	T CHASSIS THICKNESS	PACKAGE
CUH-10A	10.2	14.0	3.35	5.6	ø4.75	9.5	0.8~1.6	500

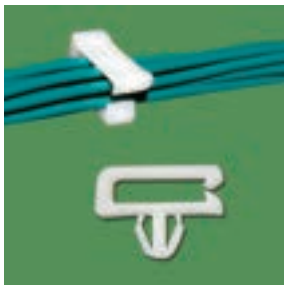

隔离束线座 WIRE SADDLE 6-51-5

- MATERIAL: NYLON 66(UL)
- FLAME CLASS: 94V-0/94V-2
- COLOR: NATURAL

PART NO	A	B	D	T CHASSIS THICKNESS	PACKAGE
CH-02	10.4	14.3	4.6	0.8~1.2	1000

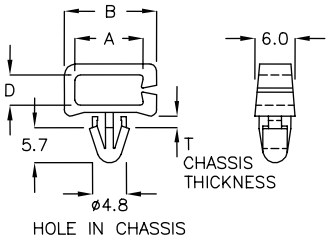

隔离束线座 WIRE SADDLE 6-52-1

- MATERIAL: NYLON 66(UL)
- FLAME CLASS: 94V-0/94V-2
- COLOR: NATURAL

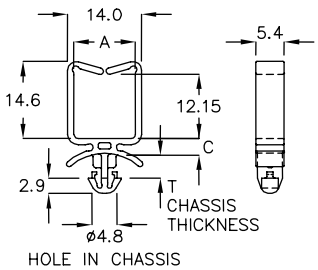

PART NO	A	C	T CHASSIS THICKNESS	PACKAGE
CZM-11F	11.6	3.17	3.5	500

隔离束线座 WIRE SADDLE 6-52-2

- MATERIAL: NYLON 66(UL)
- FLAME CLASS: 94V-0/94V-2
- COLOR: BLACK

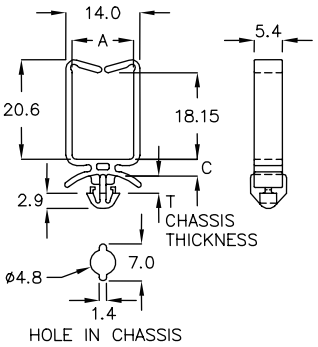

Built-In Anti-Spin Function

PART NO	A	C	T CHASSIS THICKNESS	PACKAGE
CZY-11BH	11.6	3.17	2.4	500

隔离束线座 WIRE SADDLE 6-52-3

- MATERIAL: NYLON 66(UL)
- FLAME CLASS: 94V-0/94V-2
- COLOR: BLACK

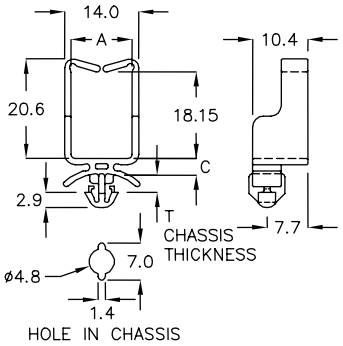

Built-In Anti-Spin Function

PART NO	A	C	T CHASSIS THICKNESS	PACKAGE
CZP-11JK	11.6	3.15	1.6~2.4	500

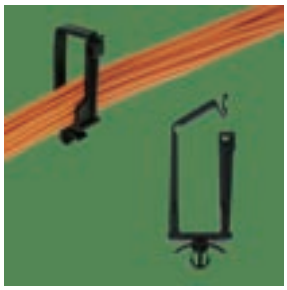

隔离束线座 WIRE SADDLE 6-52-4

- MATERIAL: NYLON 66(UL)
- FLAME CLASS: 94V-0/94V-2
- COLOR: BLACK

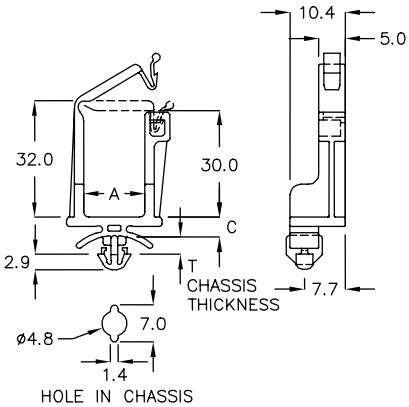

Built-In Anti-Spin Function

PART NO	A	C	T CHASSIS THICKNESS	PACKAGE
CZPA-11A	11.6	3.8	1.6~2.4	500

隔离束线座 WIRE SADDLE 6-53-1

- MATERIAL: NYLON 66(UL)
- FLAME CLASS: 94V-0/94V-2
- COLOR: NATURAL

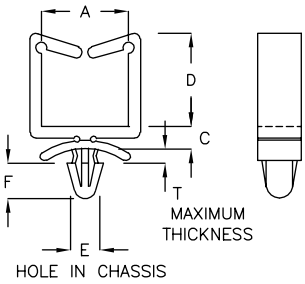

PART NO	A	C	D	E	F	T MAXIMUM THICKNESS	PACKAGE
CH-05	10.9	4.1	9.7	ø4.8	5.9	1.9	500
CH-10	11.0	3.9	15.0	ø4.8	5.8	1.9	
CH-10A	10.9	4.1	11.2	ø4.8	2.8	2.0	
CH-10L	11.0	3.7	23.7	ø4.8	5.6	2.1	
CH-14	14.6	4.1	15.1	ø5.0	6.2	2.1	
CH-14A	14.6	4.0	15.5	ø5.0	4.2	3.0	
CH-16	15.9	4.1	16.4	ø5.0	5.9	2.1	
CH-29	23.0	4.8	15.9	ø5.0	6.2	1.8	

隔离束线座 WIRE SADDLE 6-53-2

- MATERIAL: NYLON 66(UL)
- FLAME CLASS: 94V-0/94V-2
- COLOR: NATURAL,BLACK

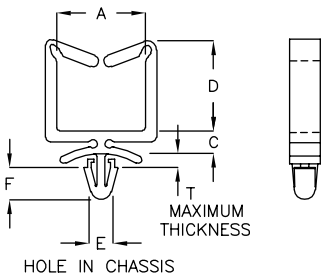

PART NO	A	C	D	E	F	T MAXIMUM THICKNESS	PACKAGE
CH-16A	15.7	4.0	15.9	ø4.8	5.7	2.1	500

隔离束线座 WIRE SADDLE 6-53-3

- MATERIAL: NYLON 66(UL)
- FLAME CLASS: 94V-0/94V-2
- COLOR: NATURAL

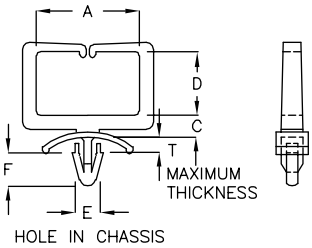

E154548(S)
CH-30(N66 94V-0) UL:E154548(S)

PART NO	A	C	D	E	F	T MAXIMUM THICKNESS	PACKAGE
CH-30	22.7	4.8	13.9	ø5.0	7.1	3.2	200

隔离束线座 WIRE SADDLE 6-54-1

- MATERIAL: NYLON 66(UL)
- FLAME CLASS: 94V-0/94V-2
- COLOR: NATURAL

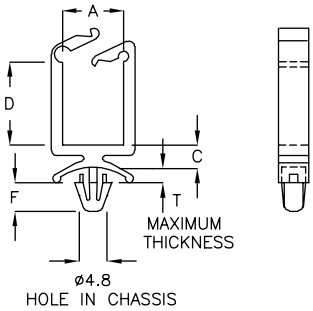

PART NO	A	C	D	F	T MAXIMUM THICKNESS	PACKAGE
CM-10	10.8	4.1	19.4	5.0	2.0	500
CM-10L	23.7	4.7	32.2	5.0	2.0	
CM-10M	10.8	4.1	10.3	5.0	2.0	
CM-10Q	10.8	4.1	10.3	2.4	2.0	
CM-10S	10.8	4.1	7.3	5.0	2.0	

隔离束线座 WIRE SADDLE 6-54-2

- MATERIAL: NYLON 66(UL)
- FLAME CLASS: 94V-0/94V-2
- COLOR: NATURAL,BLACK

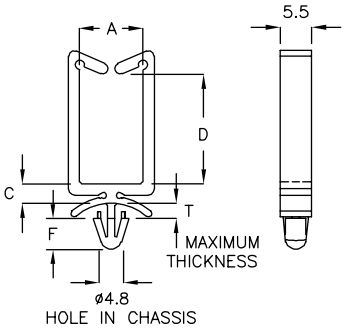

PART NO	A	C	D	F	T MAXIMUM THICKNESS	PACKAGE
CH-10C	11.1	3.6	19.5	5.5	1.6	500

隔离束线座 WIRE SADDLE 6-54-3

- MATERIAL: NYLON 66(UL)
- FLAME CLASS: 94V-0/94V-2
- COLOR: NATURAL

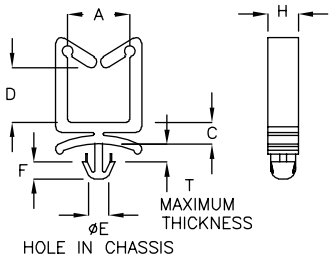

PART NO	A	C	D	E HOLE IN CHASSIS	F	H	T MAXIMUM THICKNESS	PACKAGE
CH-10F	10.9	3.75	7.8	ø4.8	2.7	5.4	2.4	1000
CH-11	11.0	3.9	9.4	ø4.8	3.0	5.4	2.4	
CH-16DK	16.0	3.6	6.7	ø4.5	3.8	5.0	1.0	500

隔离束线座 WIRE SADDLE 6-54-4

- MATERIAL: NYLON 66(UL)
- FLAME CLASS: 94V-0/94V-2
- COLOR: NATURAL,BLACK

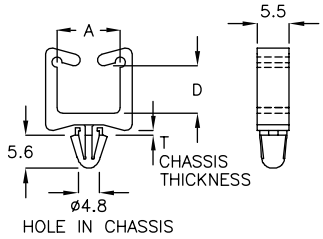

PART NO	A	D	T CHASSIS THICKNESS	PACKAGE
CAC-10A	10.6	8.1	1.0	500

隔离束线座 WIRE SADDLE 6-54-5

- MATERIAL: NYLON 66(UL)
- FLAME CLASS: 94V-0/94V-2
- COLOR: NATURAL,BLACK

Built-In Anti-Spin Function

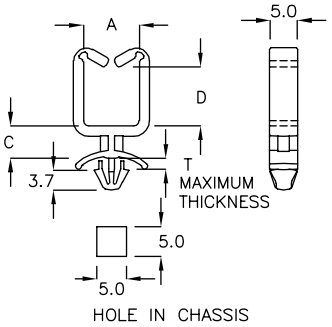

PART NO	A	C	D	T MAXIMUM THICKNESS	PACKAGE
CHL-02	10.0	5.7	10.0	1.6	500

隔离束线座 WIRE SADDLE 6-55-1

- MATERIAL: NYLON 66(UL)
- FLAME CLASS: 94V-0/94V-2
- COLOR: NATURAL

PART NO	A	T MAXIMUM THICKNESS	PACKAGE
CH-20	ø15.5	1.6	500

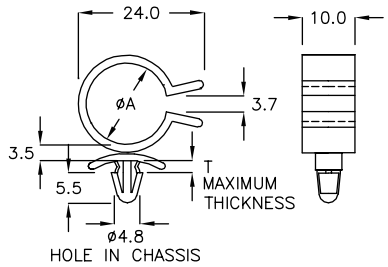

隔离束线座 WIRE SADDLE 6-55-2

- MATERIAL: NYLON 66(UL)
- FLAME CLASS: 94V-0/94V-2
- COLOR: NATURAL

PART NO	A	T MAXIMUM THICKNESS	PACKAGE
CH-20C	ø15.0	1.6	500

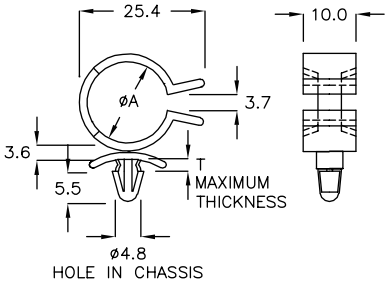

隔离束线座 WIRE SADDLE 6-55-3

- MATERIAL: NYLON 66(UL)
- FLAME CLASS: 94V-0/94V-2
- COLOR: NATURAL

Built-In Anti-Spin Function

PART NO	A	C	T MAXIMUM THICKNESS	PACKAGE
CSK-6A	ø10.0	6.4	1.6	500
CSK-26A	ø10.0	27.0	1.6	

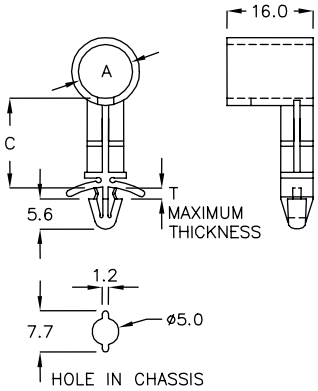

隔离束线座 WIRE SADDLE 6-55-4

- MATERIAL: NYLON 66(UL)
- FLAME CLASS: 94V-0/94V-2
- COLOR: NATURAL

Built-In Anti-Spin Function
WITH LOCK FEATURE

PART NO	A	C	D	T MAXIMUM THICKNESS	PACKAGE
CH-20A	22.9	5.3	14.2	3.2	500

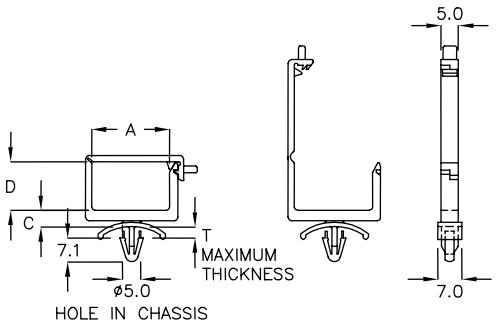

隔离束线座 WIRE SADDLE 6-55-5

- MATERIAL: NYLON 66(UL)
- FLAME CLASS: 94V-0/94V-2
- COLOR: NATURAL,BLACK

Built-In Anti-Spin Function
WITH LOCK FEATURE

PART NO	A	C	D	T CHASSIS THICKNESS	PACKAGE
CKS-10A	11.0	4.8	9.5	0.8~1.0	500

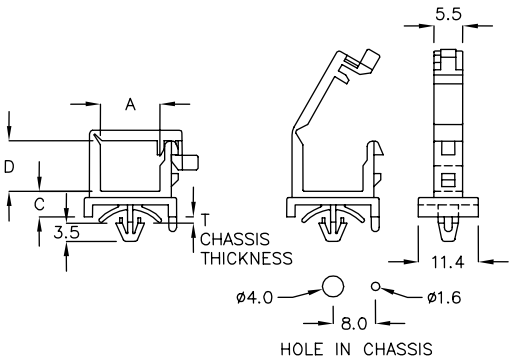

隔离束线座 WIRE SADDLE 6-56-1

- MATERIAL: NYLON 66(UL)
- FLAME CLASS: 94V-0/94V-2
- COLOR: NATURAL,BLACK

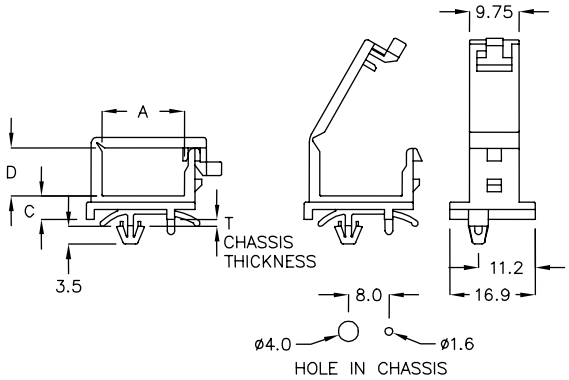

Built –In Anti–Spin Function
WITH LOCK FEATURE

PART NO	A	C	D	T CHASSIS THICKNESS	PACKAGE
CKS–16C	16.0	4.6	9.5	0.8~1.2	500

隔离束线座 WIRE SADDLE 6-56-2

- MATERIAL: NYLON 66(UL)
- FLAME CLASS: 94V-0/94V-2
- COLOR: NATURAL

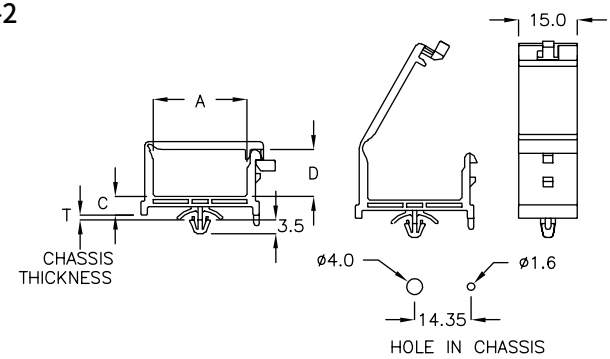

Built –In Anti–Spin Function
WITH LOCK FEATURE

PART NO	A	C	D	T CHASSIS THICKNESS	PACKAGE
CKS–24	24.0	4.7	12.0	0.8~1.0	200

隔离束线座 WIRE SADDLE 6-56-3

- MATERIAL: NYLON 66(UL)
- FLAME CLASS: 94V-0/94V-2
- COLOR: NATURAL

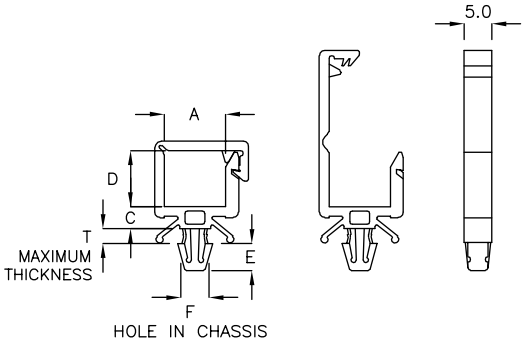

WITH LOCK FEATURE

PART NO	A	C	D	E	F	T MAXIMUM THICKNESS	PACKAGE
CK–5	11.0	4.0	5.2	5.1	ø4.8~ø5.0	2.4	500
CK–10	11.0	4.0	10.2	5.1	ø4.8~ø5.0	2.4	
CK–13HJ	22.8	4.0	13.6	4.9	ø4.8	0.5~1.0	
CK–014	16.0	4.0	14.2	5.1	ø4.8~ø5.0	2.4	

隔离束线座 WIRE SADDLE 6-56-4

- MATERIAL: NYLON 66(UL)
- FLAME CLASS: 94V-0/94V-2
- COLOR: NATURAL

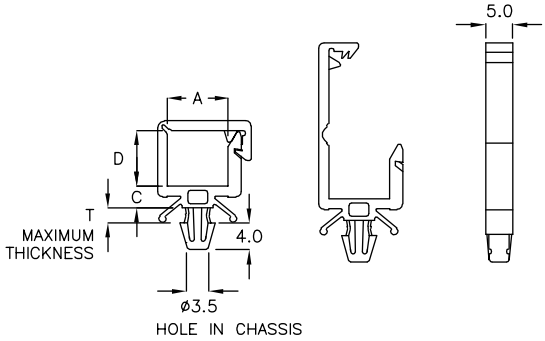

WITH LOCK FEATURE

PART NO	A	C	D	T MAXIMUM THICKNESS	PACKAGE
CHJ–05	11.0	4.0	5.2	2.4	500
CHJ–10	11.0	4.0	10.2	2.4	

隔离束线座 WIRE SADDLE 6-57-1

- MATERIAL: NYLON 66(UL)
- FLAME CLASS: 94V-0/94V-2
- COLOR: NATURAL

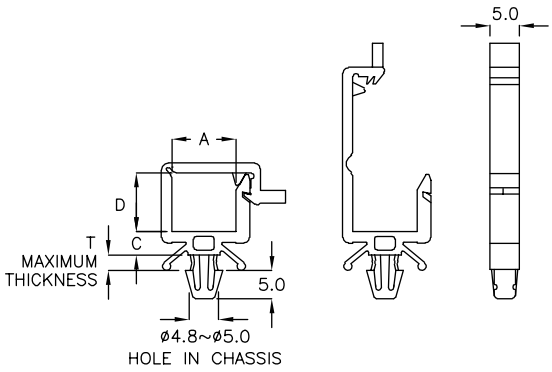

WITH LOCK FEATURE

PART NO	A	C	D	T MAXIMUM THICKNESS	PACKAGE
CK-10A	11.0	4.0	10.4	2.4	500
CK-14A	16.0	4.0	14.0	2.4	

隔离束线座 WIRE SADDLE 6-57-2

- MATERIAL: NYLON 66(UL)
- FLAME CLASS: 94V-0/94V-2
- COLOR: BLACK

PART NO	A	B	T CHASSIS THICKNESS	PACKAGE
CH-01	7.5	10.5	3.5	1000

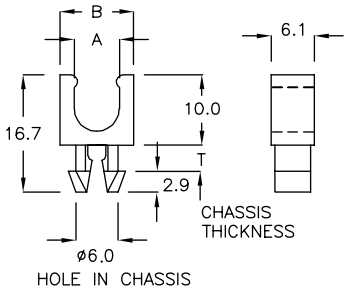

隔离束线座 WIRE SADDLE 6-57-3

- MATERIAL: NYLON 66(UL)
- FLAME CLASS: 94V-0/94V-2
- COLOR: NATURAL

Built-In Anti-Spin Function

PART NO	A	D	T CHASSIS THICKNESS	PACKAGE
CHK-01	8.6	ø8.4	0.8	500

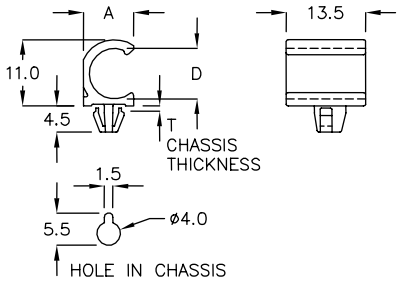

隔离束线座 TIE MOUNT 6-57-4

- MATERIAL: NYLON 66(UL)
- FLAME CLASS: 94V-0/94V-2
- COLOR: NATURAL

Built-In Anti-Spin Function

PART NO	A	D	T CHASSIS THICKNESS	PACKAGE
FWS-01	13.6	8.2	0.8~1.2	500

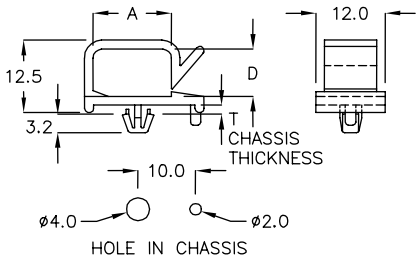

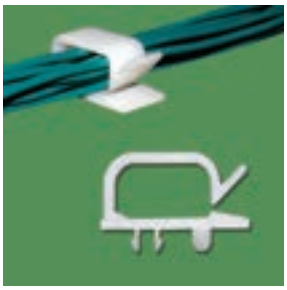

隔离束线座 TIE MOUNT 6-57-5

- MATERIAL: NYLON 66(UL)
- FLAME CLASS: 94V-0/94V-2
- COLOR: NATURAL

Built-In Anti-Spin Function

PART NO	A	D	T CHASSIS THICKNESS	PACKAGE
FWS-02	13.8	8.3	0.8~1.0	500

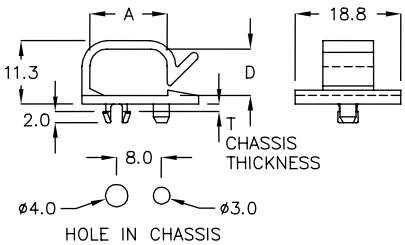

隔离束线座 WIRE SADDLE 6-58-1

- MATERIAL: NYLON 66(UL)
- FLAME CLASS: 94V-0/94V-2
- COLOR: BLACK

PART NO	A	D	T CHASSIS THICKNESS	PACKAGE
CYW-5K	5.0	4.0	4.0	1000

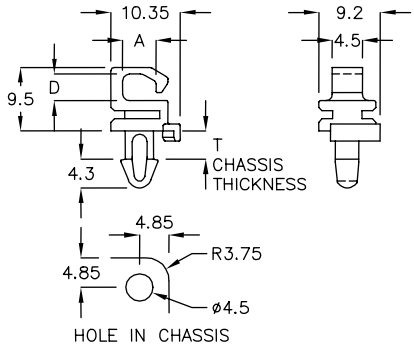

隔离束线座 WIRE SADDLE 6-58-2

- MATERIAL: NYLON 66(UL)
- FLAME CLASS: 94V-0/94V-2
- COLOR: NATURAL

PART NO	A	D	PACKAGE
CFK-14TS	5.0	4.0	1000

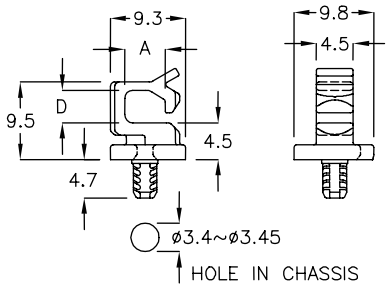

电线固定座 WIRE MOUNT 6-58-3

- MATERIAL: NYLON 66(UL)
- FLAME CLASS: 94V-0/94V-2
- COLOR: NATURAL

PART NO	A	D CLOSE DIA	T CHASSIS THICKNESS	PACKAGE
CFKA-6	12.75	ø6.0~ø7.0	5.0	1000

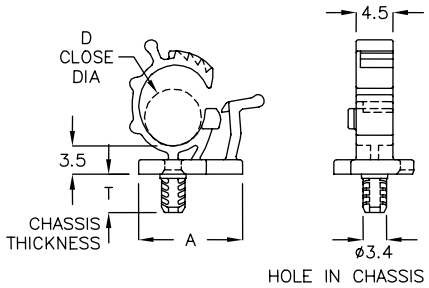

隔离束线座 WIRE SADDLE 6-58-4

- MATERIAL: NYLON 66(UL)
- FLAME CLASS: 94V-0/94V-2
- COLOR: BLACK

PART NO	A	D	T CHASSIS THICKNESS	PACKAGE
CYWF-24GH	6.35	5.0	5.0	500

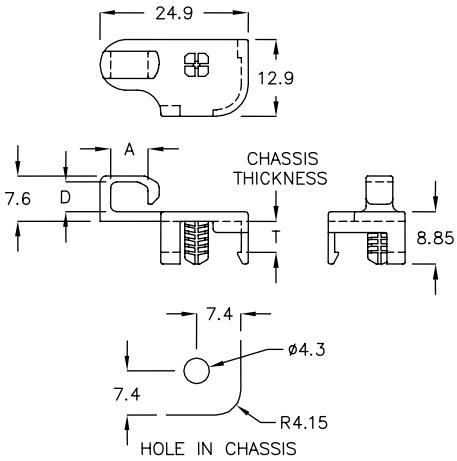

隔离束线座 WIRE SADDLE 6-58-5

- MATERIAL: NYLON 66(UL)
- FLAME CLASS: 94V-0/94V-2
- COLOR: NATURAL

Built-In Anti-Spin Function

PART NO	A	D	T CHASSIS THICKNESS	PACKAGE
CUA-8K	5.6	2.5	1.0	1000

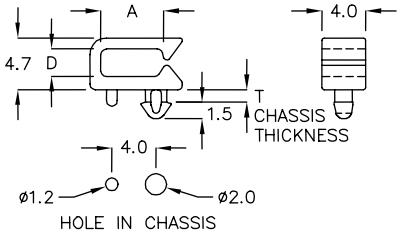

隔离束线座 WIRE SADDLE 6-59-1

- MATERIAL: NYLON 66(UL)
- FLAME CLASS: 94V-0/94V-2
- COLOR: NATURAL

Built–In Anti–Spin Function

PART NO	A	D	T MAXIMUM THICKNESS	PACKAGE
CU–04	12.0	6.0	1.0	500

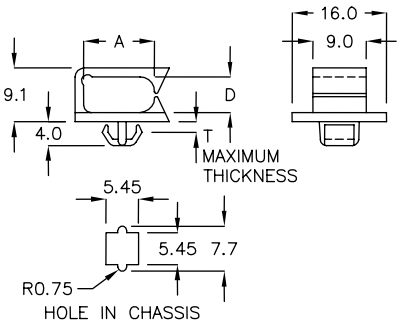

隔离束线座 WIRE SADDLE 6-59-2

- MATERIAL: NYLON 66(UL)
- FLAME CLASS: 94V-0/94V-2
- COLOR: BLACK

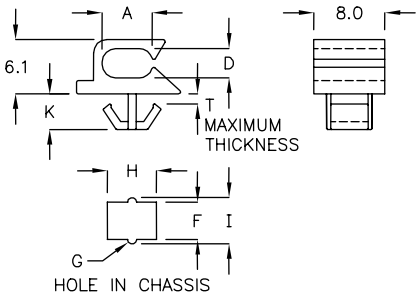

Built –In Anti–Spin Function

PART NO	A	D	F	G	H	I	K	T MAXIMUM THICKNESS	PACKAGE
CU–01H	5.6	3.3	4.2	R0.5	5.5	5.2	4.0	1.0	1000
CU–01K	5.6	3.3	4.2	R0.5	5.5	5.2	4.3	1.2	2000
CU–1RS	5.6	3.3	4.1	R0.55	4.3	5.1	4.3	1.1	1000

隔离束线座 WIRE SADDLE 6-59-3

- MATERIAL: NYLON 66(UL)
- FLAME CLASS: 94V-0/94V-2
- COLOR: NATURAL,BLACK

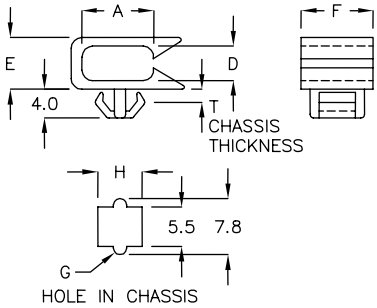

Built –In Anti–Spin Function

PART NO	A	D	E	F	G	H	T CHASSIS THICKNESS	PACKAGE
CU–2C	4.2	2.5	5.1	9.4	R0.9	6.2	1.0~1.2	1000
CU–03	10.0	4.8	7.2	10.0	R0.85	5.5	0.6~0.8	

隔离束线座 WIRE SADDLE 6-59-4

- MATERIAL: NYLON 66(UL)
- FLAME CLASS: 94V-0/94V-2
- COLOR: NATURAL

Built –In Anti–Spin Function

PART NO	A	D	E	T CHASSIS THICKNESS	PACKAGE
CU–01	8.2	3.3	6.4	0.8~1.0	1000
CU–01F	9.0	4.6	7.6	0.8~1.0	

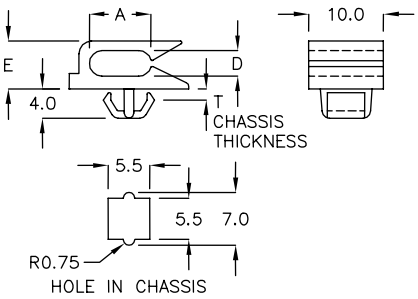

隔离束线座 WIRE SADDLE 6-60-1

- MATERIAL: NYLON 66(UL)
- FLAME CLASS: 94V-0/94V-2
- COLOR: NATURAL

Built –In Anti–Spin Function

PART NO	A	D	E	T CHASSIS THICKNESS	PACKAGE
CU–01J	9.0	4.6	7.6	0.8～1.0	500

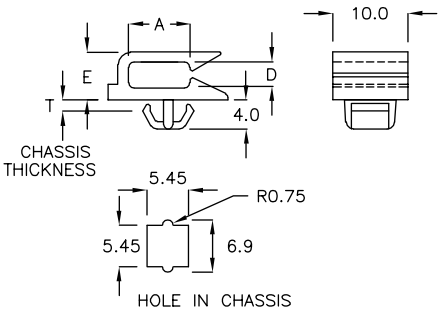

隔离束线座 WIRE SADDLE 6-60-2

- MATERIAL: NYLON 66(UL)
- FLAME CLASS: 94V-0/94V-2
- COLOR: NATURAL

Built –In Anti–Spin Function

PART NO	A	B	C	D	E	T MAXIMUM THICKNESS	PACKAGE
CH–08	10.9	14.3	13.5	9.7	6.3	2.2	500
CH–08L	12.0	16.8	13.5	9.4	5.8	1.6	
CH–08A	11.0	14.3	15.7	12.0	6.1	2.2	

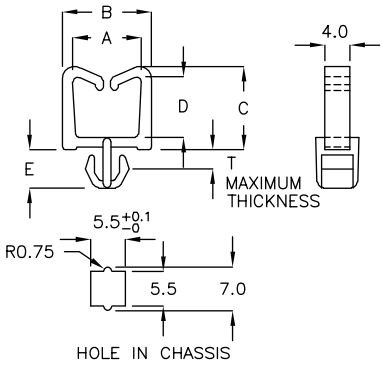

隔离束线座 WIRE SADDLE 6-60-3

- MATERIAL: NYLON 66(UL)
- FLAME CLASS: 94V-0/94V-2
- COLOR: NATURAL

Built –In Anti–Spin Function
WITH LOCK FEATURE

PART NO	A	D	T MAXIMUM THICKNESS	PACKAGE
CKH–11	11.1	10.5	2.0	500
CKH–13	16.0	14.5	2.0	

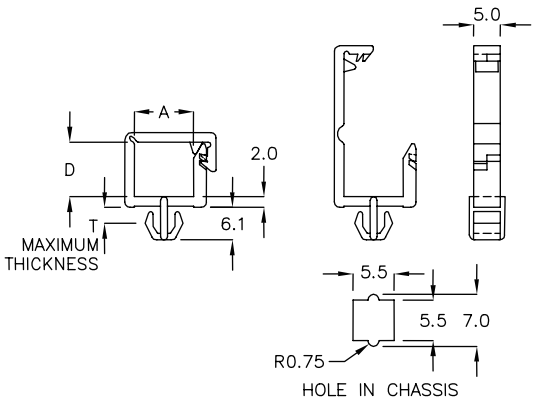

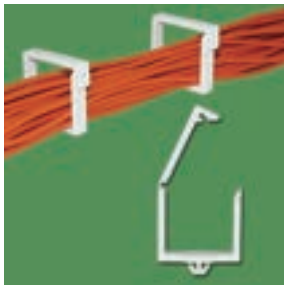

隔离束线座 WIRE SADDLE 6-60-4

- MATERIAL: NYLON 66(UL)
- FLAME CLASS: 94V-0/94V-2
- COLOR: WHITE

Built –In Anti–Spin Function
WITH LOCK FEATURE

PART NO	A	D	T CHASSIS THICKNESS	PACKAGE
CKH–22A	22.2	21.5	0.8~1.0	500

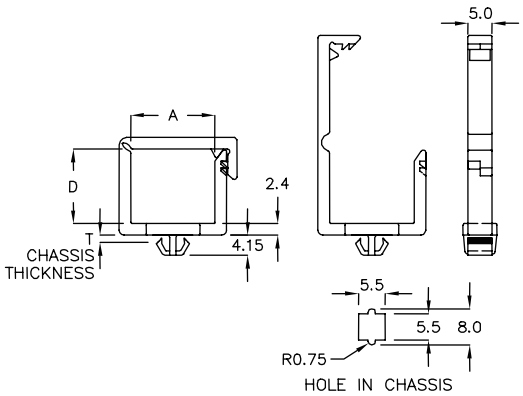

隔离束线座 WIRE SADDLE 6-61-1

- MATERIAL: NYLON 66(UL)
- FLAME CLASS: 94V-0/94V-2
- COLOR: BLACK

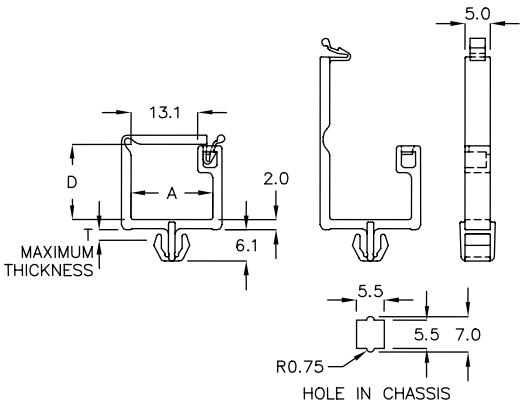

Built –In Anti–Spin Function
WITH LOCK FEATURE

PART NO	A	D	T MAXIMUM THICKNESS	PACKAGE
CKHA–16	16.0	14.5	2.0	500

隔离束线座 WIRE SADDLE 6-61-2

- MATERIAL: NYLON 66(UL)
- FLAME CLASS: 94V-0/94V-2
- COLOR: NATURAL

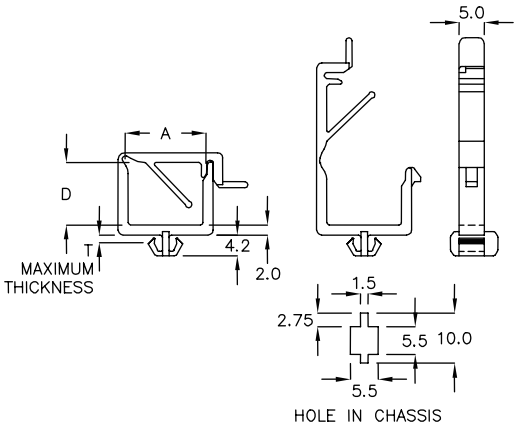

Built –In Anti–Spin Function
WITH LOCK FEATURE

PART NO	A	D	T MAXIMUM THICKNESS	PACKAGE
CYH–16C	16.0	14.0	0.6	500

隔离束线座 WIRE SADDLE 6-61-3

- MATERIAL: NYLON 66(UL)
- FLAME CLASS: 94V-0/94V-2
- COLOR: NATURAL

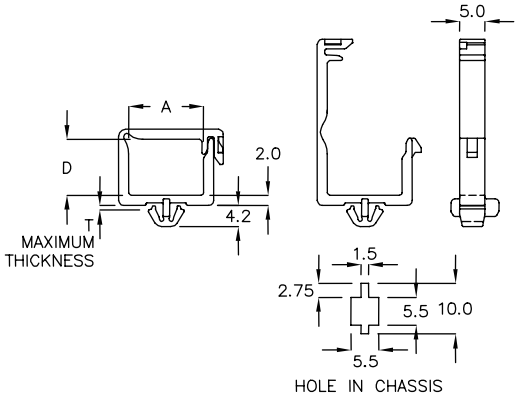

Built –In Anti–Spin Function
WITH LOCK FEATURE

PART NO	A	D	T MAXIMUM THICKNESS	PACKAGE
CYK–16G	16.0	14.2	0.6	500

隔离束线座 WIRE SADDLE 6-61-4

- MATERIAL: NYLON 66(UL)
- FLAME CLASS: 94V-0/94V-2
- COLOR: NATURAL

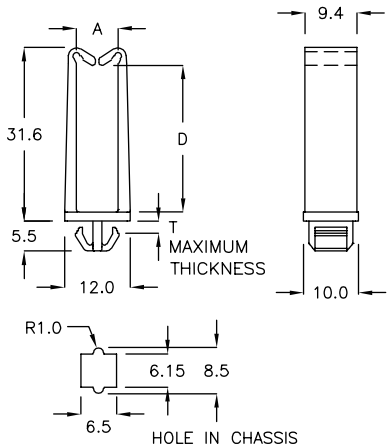

Built –In Anti–Spin Function

PART NO	A	D	T MAXIMUM THICKNESS	PACKAGE
CMB–7A	7.6	26.8	1.6	200

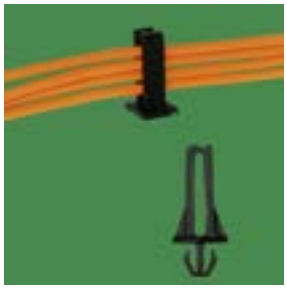

隔离束线座 WIRE SADDLE 6-62-1

- MATERIAL: NYLON 66(UL)
- FLAME CLASS: 94V-0/94V-2
- COLOR: BLACK

Built–In Anti–Spin Function

PART NO	A	D	T CHASSIS THICKNESS	PACKAGE
CMBF–1K	1.7	13.0	1.2	200

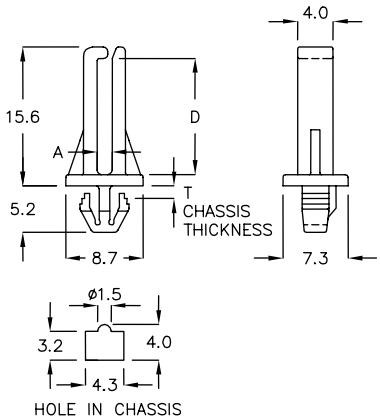

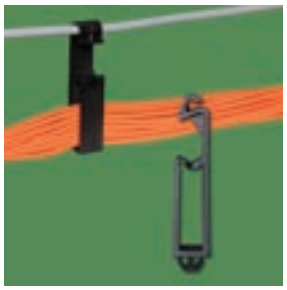

电线固定座 WIRE MOUNT 6-62-2

- MATERIAL: NYLON 66(UL)
- FLAME CLASS: 94V-0/94V-2
- COLOR: BLACK

Built –In Anti–Spin Function

PART NO	A	D	T CHASSIS THICKNESS	PACKAGE
CYS–7TK	7.6	31.6	1.2~1.6	100

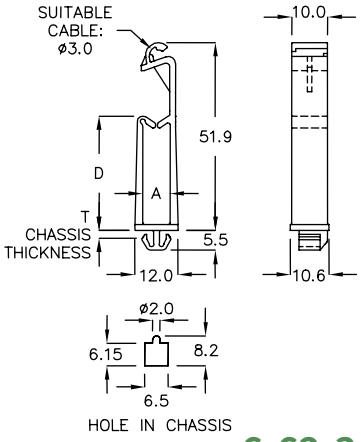

电线固定座 WIRE MOUNT 6-62-3

- MATERIAL: NYLON 66(UL)
- FLAME CLASS: 94V-0/94V-2
- COLOR: BLACK

Built –In Anti–Spin Function
WITH LOCK FEATURE

PART NO	A	C	D	PACKAGE
CD–4	ø12.6	19.6	25.8	100

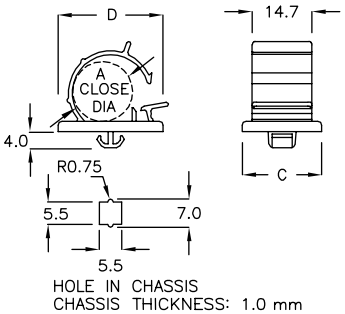

电线固定座 WIRE MOUNT 6-62-4

- MATERIAL: NYLON 66(UL)
- FLAME CLASS: 94V-0/94V-2
- COLOR: BLACK

Built –In Anti–Spin Function
WITH LOCK FEATURE

PART NO	A	C	D	PACKAGE
CDF–24	ø11.0~13.0	12.0	24.0	100

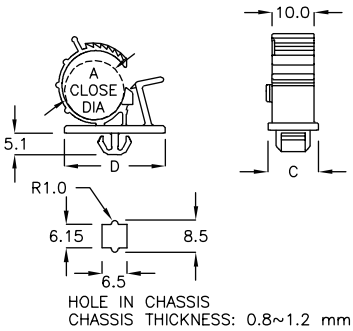

隔离束线座 WIRE SADDLE 6-62-5

- MATERIAL: NYLON 66(UL)
- FLAME CLASS: 94V-0/94V-2
- COLOR: NATURAL

Built –In Anti–Spin Function

PART NO	A	T MAXIMUM THICKNESS	PACKAGE
CH–04C	ø4.0	1.0	1000

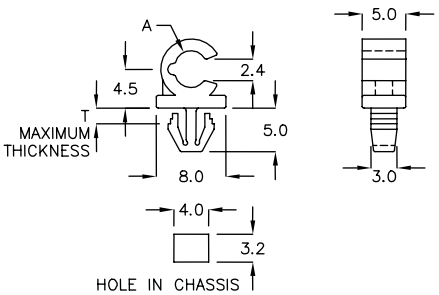

隔离束线座 WIRE SADDLE 6-63-1

- MATERIAL: NYLON 66(UL)
- FLAME CLASS: 94V-0/94V-2
- COLOR: NATURAL

Build-In Anti-Spin Function

PART NO	A	T MAXIMUM THICKNESS	PACKAGE
CNA-04F	ø4.0	1.0	1000

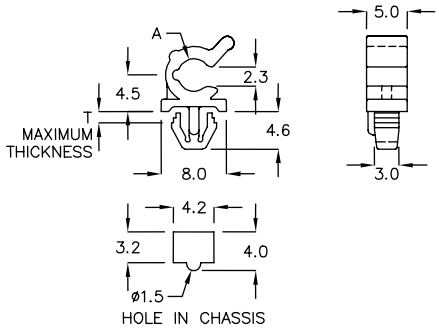

隔离束线座 WIRE SADDLE 6-63-2

- MATERIAL: NYLON 66(UL)
- FLAME CLASS: 94V-0/94V-2
- COLOR: NATURAL

Built-In Anti-Spin Function

PART NO	A	T MAXIMUM THICKNESS	PACKAGE
CH-06S	ø5.5	2.0	500

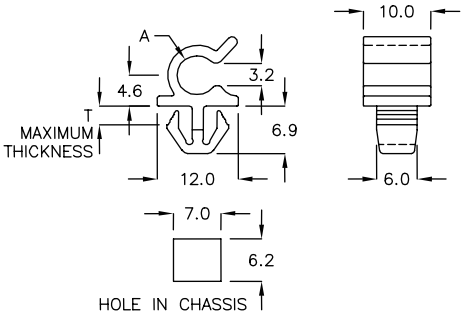

隔离束线座 WIRE SADDLE 6-63-3

- MATERIAL: NYLON 66(UL)
- FLAME CLASS: 94V-0/94V-2
- COLOR: NATURAL

Build-In Anti-Spin Function

PART NO	A	T MAXIMUM THICKNESS	PACKAGE
CH-09	ø9.7	1.8	200

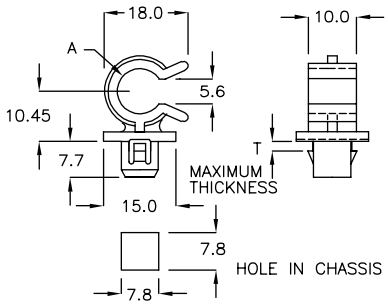

隔离束线座 WIRE SADDLE 6-63-4

- MATERIAL: NYLON 66(UL)
- FLAME CLASS: 94V-0/94V-2
- COLOR: NATURAL,BLACK

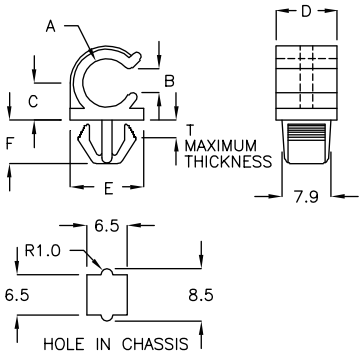

Build-In Anti-Spin Function

PART NO	A	B	C	D	E	F	T MAXIMUM THICKNESS	PACKAGE
CH-09S	ø7.9	3.5	6.0	9.9	12.0	7.0	2.0	500
CH-09A	ø8.0	4.9	7.1	8.0	11.6	5.55	2.0	
CH-09C	ø9.5	3.8	6.75	9.9	13.5	7.0	2.0	

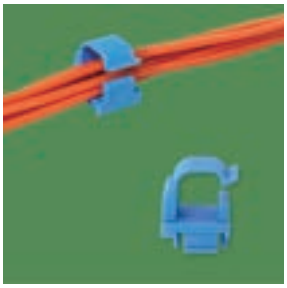

隔离束线座 WIRE SADDLE 6-63-5

- MATERIAL: NYLON 66(UL)
- FLAME CLASS: 94V-0/94V-2
- COLOR: BLUE

NEW

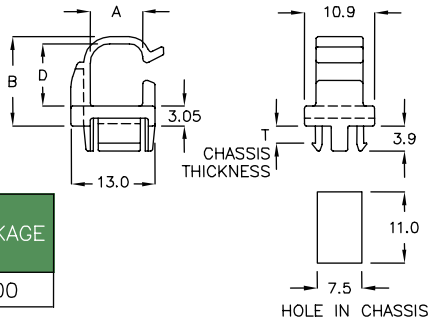

	PART NO	A	B	D	T CHASSIS THICKNESS	PACKAGE
★	CYWK-8H	8.1	13.9	9.7	2.5	500

隔离束线座 WIRE SADDLE 6-64-1

- MATERIAL: NYLON 66(UL)
- FLAME CLASS: 94V-0/94V-2
- COLOR: NATURAL

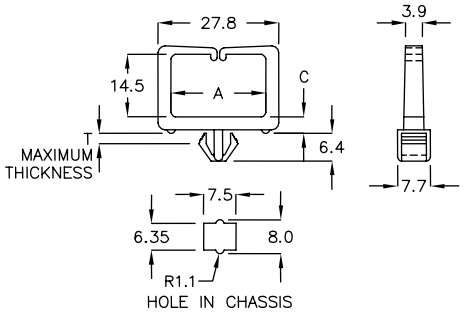

Built-In Anti-Spin Function

PART NO	A	C	T MAXIMUM THICKNESS	PACKAGE
CHN-01	21.6	3.9	2.2	200

电线固定座 WIRE MOUNT 6-64-2

- MATERIAL: NYLON 66(UL)
- FLAME CLASS: 94V-0/94V-2
- COLOR: NATURAL,BLACK

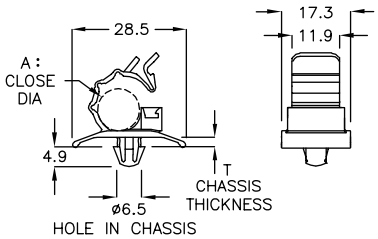

WITH LOCK FEATURE

PART NO	A CLOSE DIA	T CHASSIS THICKNESS	PACKAGE
CCD-01	ø10.0	0.8~1.2	200

电线固定座 WIRE MOUNT 6-64-3

- MATERIAL: PE
- COLOR: BLACK

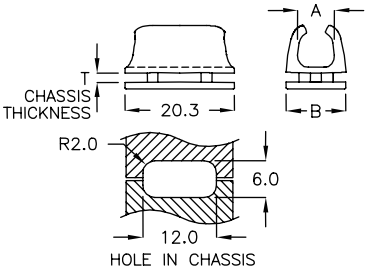

PART NO	A	B	T CHASSIS THICKNESS	PACKAGE
BAK-20A	6.7	11.0	1.6	500

电线固定座 WIRE MOUNT 6-64-4

- MATERIAL: NYLON 66(UL)
- FLAME CLASS: 94V-0/94V-2
- COLOR: NATURAL

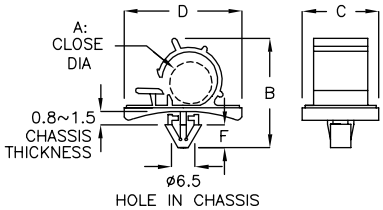

WITH LOCK FEATURE

PART NO	A	B	C	D	F	PACKAGE
CC-3	ø9.5	23.9	17.0	26.0	5.0	200
CC-3PH	ø7.8	24.9	19.0	21.0	4.8	
CC-4	ø13.5	32.0	19.4	30.3	5.2	100
CC-04A	ø17.0	33.7	19.3	30.2	5.1	

隔离束线座 WIRE SADDLE 6-65-1

- MATERIAL: NYLON 66(UL)
- FLAME CLASS: 94V-0/94V-2
- COLOR: NATURAL

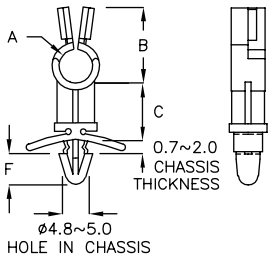

PART NO	A	B	C	F	PACKAGE
CS-6	ø6.2	14.0	6.35	5.8	500
CS-12	ø6.2	14.0	13.0	5.9	

光纤固定座 FIBER HOUSING 6-65-2

- MATERIAL: NYLON 66(UL)
- FLAME CLASS: 94V-0/94V-2
- COLOR: NATURAL

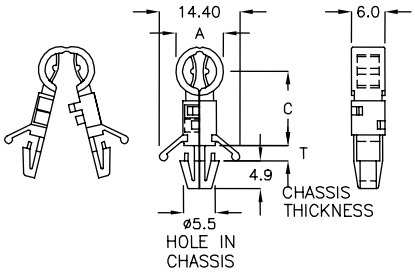

PART NO	A	C	T CHASSIS THICKNESS	PACKAGE
CCA-13	ø8.5	13.0	0.8~2.3	500

光纤固定座 FIBER HOUSING 6-65-3

- MATERIAL: NYLON 66(UL)
- FLAME CLASS: 94V-0/94V-2
- COLOR: NATURAL

Built-In Anti-Spin Function
WITH LOCK FEATURE

PART NO	A	T CHASSIS THICKNESS	PACKAGE
CHX-01	6.0	0.8~1.6	1000
CHX-1A	6.0	0.8~2.5	

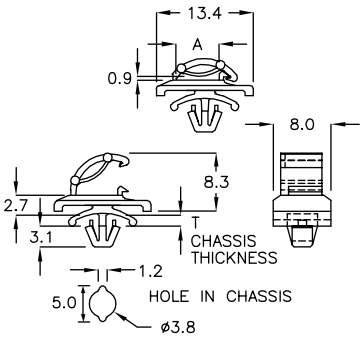

电线固定座 WIRE MOUNT 6-65-4

- MATERIAL: NYLON 66(UL)
- FLAME CLASS: 94V-0/94V-2
- COLOR: NATURAL

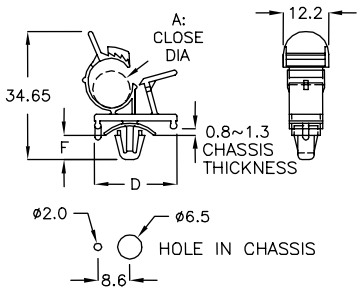

Built-In Anti-Spin Function
WITH LOCK FEATURE

PART NO	A	D	F	PACKAGE
FWD-01	ø7.7~ø10.0	22.1	6.8	500
FWD-02	ø8.0~ø9.5	19.3	6.6	

电线固定座 WIRE MOUNT 6-66-1

- MATERIAL: NYLON 66(UL)
- FLAME CLASS: 94V-0/94V-2
- COLOR: NATURAL

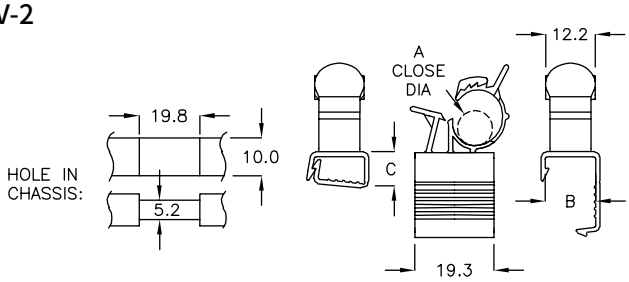

Built –In Anti–Spin Function
WITH LOCK FEATURE

PART NO	A	B	C	PACKAGE
FWC–01	ø7.5~ø9.0	12.4	8.2	100

电线固定座 WIRE MOUNT 6-66-2

- MATERIAL: NYLON 66(UL)
- FLAME CLASS: 94V-0/94V-2
- COLOR: NATURAL

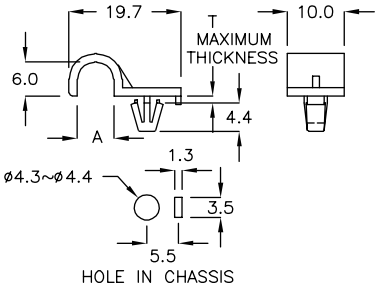

Built –In Anti–Spin Function
WITH LOCK FEATURE

PART NO	A	T MAXIMUM THICKNESS	PACKAGE
CU–06A	6.4	1.1	1000

电线固定座 WIRE MOUNT 6-66-3

- MATERIAL: NYLON 66(UL)
- FLAME CLASS: 94V-0/94V-2
- COLOR: NATURAL

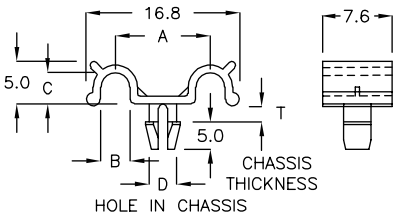

PART NO	A	B	C	D HOLE IN CHASSIS	T CHASSIS THICKNESS	PACKAGE
CIC–01	10.4	3.2	3.4	ø3.2	1.6~1.8	1000

电线固定座 WIRE MOUNT 6-66-4

- MATERIAL: NYLON 66(UL)
- FLAME CLASS: 94V-0/94V-2
- COLOR: NATURAL

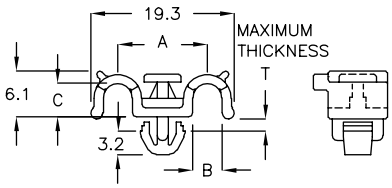

Built –In Anti–Spin Function

PART NO	A	B	C	T MAXIMUM THICKNESS	PACKAGE
CIS–18K	12.0	3.95	4.5	1.5	1000

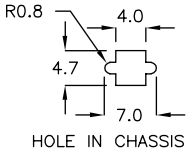

电线固定座 WIRE MOUNT 6-67-1

- MATERIAL: NYLON 66(UL)
- FLAME CLASS: 94V-0/94V-2
- COLOR: NATURAL

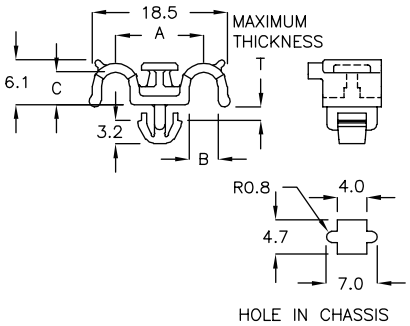

Built –In Anti–Spin Function

PART NO	A	B	C	T MAXIMUM THICKNESS	PACKAGE
CIS–18RS	12.0	3.95	4.5	1.6~2.0	1000

电线固定座 WIRE MOUNT 6-67-2

- MATERIAL: NYLON 66(UL)
- FLAME CLASS: 94V-0/94V-2
- COLOR: NATURAL

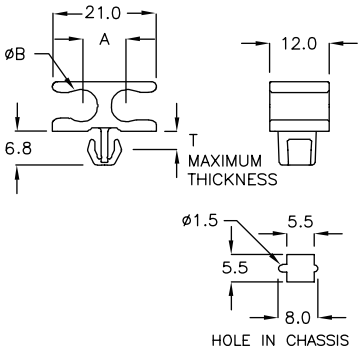

Built –In Anti–Spin Function

PART NO	A	B	T MAXIMUM THICKNESS	PACKAGE
CIK–21	8.7	ø6.5	2.5	500

电线固定座 WIRE MOUNT 6-67-3

- MATERIAL: NYLON 66(UL)
- FLAME CLASS: 94V-0/94V-2
- COLOR: NATURAL

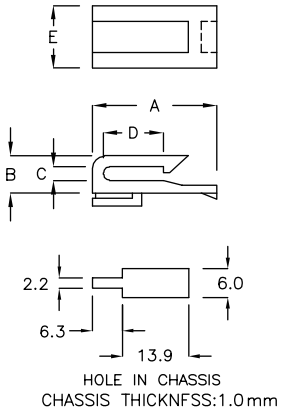

Built –In Anti–Spin Function

PART NO	A	B	C	D	E	PACKAGE
LFE–01	20.1	6.0	2.2	9.7	10.0	1000

电线固定座 WIRE MOUNT 6-67-4

- MATERIAL: NYLON 66(UL)
- FLAME CLASS: 94V-0/94V-2
- COLOR: NATURAL

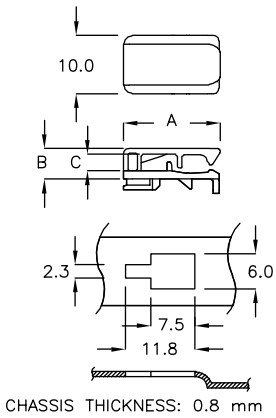

Built –In Anti–Spin Function

PART NO	A	B	C	PACKAGE
LFK–16A	16.5	5.3	2.85	1000

隔离束线座 WIRE SADDLE 6-68-1

- MATERIAL: NYLON 66(UL)
- FLAME CLASS: 94V-0/94V-2
- COLOR: BLACK

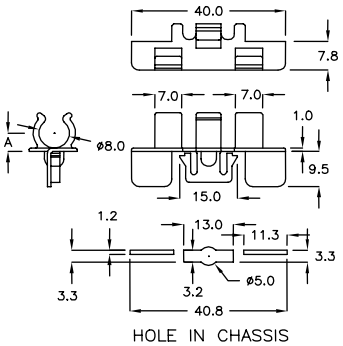

PART NO	A	B	PACKAGE
CHY-01	5.0	12.5	500

电线固定座 WIRE MOUNT 6-68-2

- MATERIAL: NYLON 66(UL)
- FLAME CLASS: 94V-0/94V-2
- COLOR: NATURAL

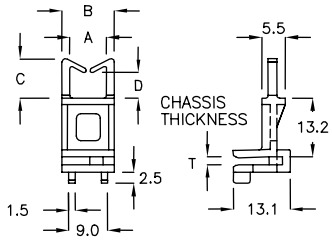

PART NO	A	B	C	D	T CHASSIS THICKNESS	PACKAGE
CNG-13	8.5	12.0	8.8	5.6	1.6	500

电线固定座 WIRE MOUNT 6-68-3

- MATERIAL: NYLON 66(UL)
- FLAME CLASS: 94V-0/94V-2
- COLOR: BLACK

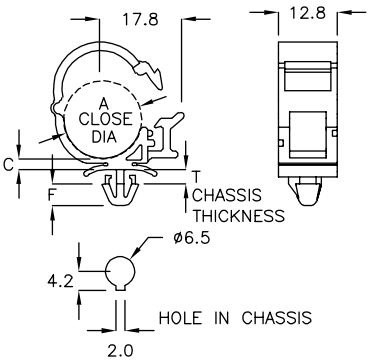

PART NO	A	C	T CHASSIS THICKNESS	F	PACKAGE
CCF-17RS	ø17.0	2.3	0.8	4.8	100

电线固定座 WIRE MOUNT 6-68-4

- MATERIAL: NYLON 66(UL)
- FLAME CLASS: 94V-0/94V-2
- COLOR: NATURAL

WITH LOCK FEATURE

PART NO	A	C	T CHASSIS THICKNESS	F	PACKAGE
CKL-25	ø25.4	3.6	0.8~1.8	5.6	100
CKL-25A	ø25.4	3.6	2.5~3.0	5.7	

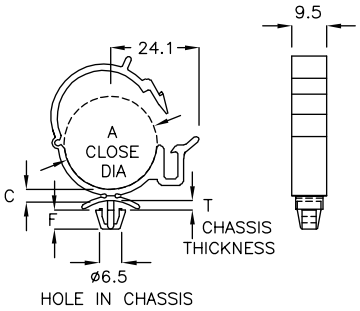

电线固定座 WIRE MOUNT 6-69-1

- MATERIAL: NYLON 66(UL)
- FLAME CLASS: 94V-0/94V-2
- COLOR: BLACK

PART NO	A	PACKAGE
CKIM-16HQ	ø10.0	100

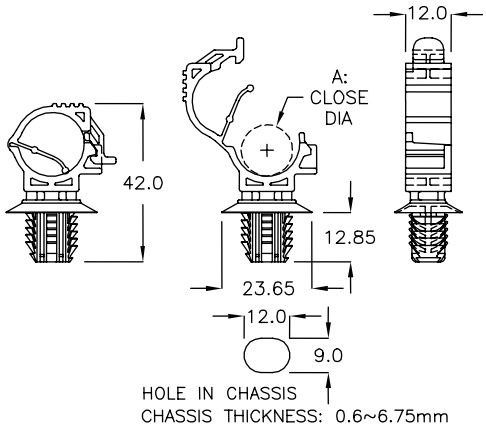

隔离束线座 WIRE SADDLE 6-69-2

- MATERIAL: NYLON 66(UL)
- FLAME CLASS: 94V-0/94V-2
- COLOR: NATURAL

PART NO	A	C	D	T CHASSIS THICKNESS	PACKAGE
TDH-25	25.5	2.55	24.0	0.6~1.2	200

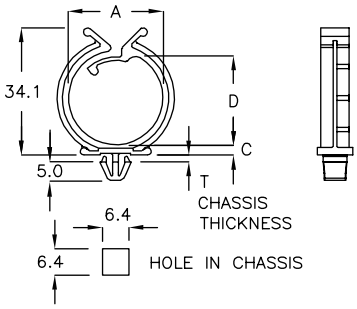

隔离束线座 WIRE SADDLE 6-69-3

- MATERIAL: NYLON 66(UL)
- FLAME CLASS: 94V-0/94V-2
- COLOR: BLACK

PART NO	A	T CHASSIS THICKNESS	PACKAGE
CHP-2A	29.9	1.2~2.8	500

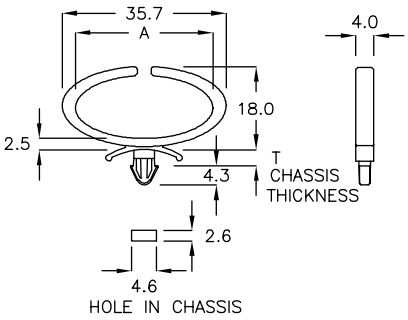

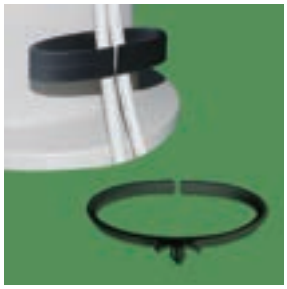

隔离束线座 WIRE SADDLE 6-69-4

- MATERIAL: NYLON 66(UL)
- FLAME CLASS: 94V-0/94V-2
- COLOR: BLACK

PART NO	A	T CHASSIS THICKNESS	PACKAGE
CHP-8A	73.5	2.5~3.0	100

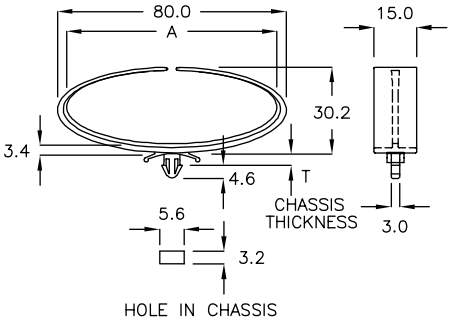

隔离束线座 WIRE SADDLE 6-69-5

- MATERIAL: NYLON 66(UL)
- FLAME CLASS: 94V-0/94V-2
- COLOR: BLACK

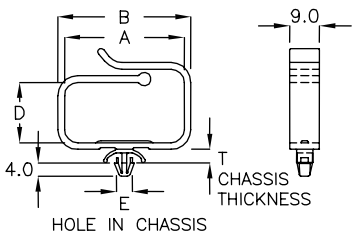

PART NO	A	B	D	E HOLE IN CHASSIS	T CHASSIS THICKNESS	PACKAGE
CND-40	36.0	40.0	18.1	ø4.8	1.3~2.8	200

隔离束线座 WIRE SADDLE 6-70-1

- MATERIAL: NYLON 66(UL)
- FLAME CLASS: 94V-0/94V-2
- COLOR: NATURAL

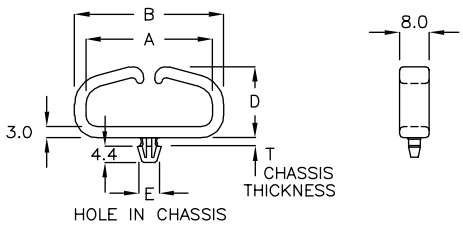

PART NO	A	B	D	E HOLE IN CHASSIS	T CHASSIS THICKNESS	PACKAGE
CKQ-40	33.8	39.8	18.5	ø4.9~ø5.0	1.8~2.0	500
CKQ-44	41.6	48.8	23.4	ø4.9~ø5.0	1.8~2.0	200
CKQ-55	49.0	55.0	18.3	ø4.9~ø5.0	1.8~2.0	

隔离束线座 WIRE SADDLE 6-70-2

- MATERIAL: NYLON 66(UL)
- FLAME CLASS: 94V-0/94V-2
- COLOR: BLACK

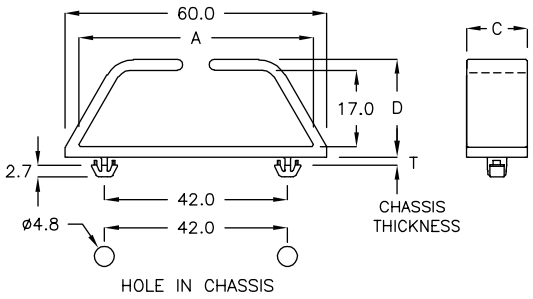

PART NO	A	C	D	T CHASSIS THICKNESS	PACKAGE
CKQ-60	53.8	14.0	22.0	1.5	200

隔离束线座 WIRE SADDLE 6-70-3

- MATERIAL: PP
- COLOR: NATURAL

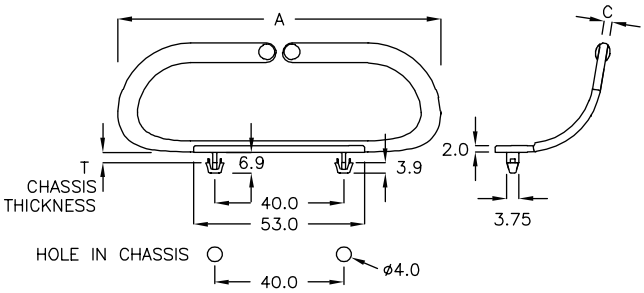

PART NO	A	C	T CHASSIS THICKNESS	PACKAGE
CKF-40	100.0	2.5	3.0	100

隔离束线座 WIRE SADDLE 6-70-4

- MATERIAL: NYLON 66(UL)
- FLAME CLASS: 94V-0/94V-2
- COLOR: NATURAL

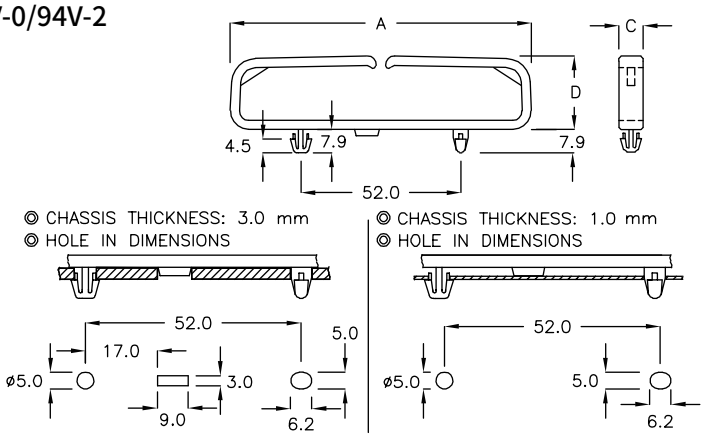

PART NO	A	C	D	PACKAGE
CKQ-98	98.0	8.0	24.0	100

隔离束线座 WIRE SADDLE 6-71-1

- MATERIAL: NYLON 66(UL)
- FLAME CLASS: 94V-0/94V-2
- COLOR: BLACK

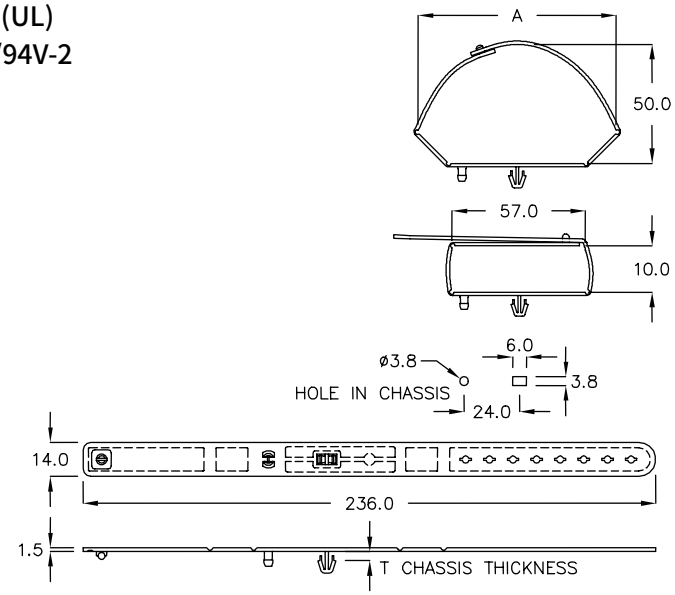

WITH LOCK FEATURE

PART NO	A	T CHASSIS THICKNESS	PACKAGE
BSR-235	80.0	3.2	200

隔离束线座 WIRE SADDLE 6-71-2

- MATERIAL: NYLON 66(UL)
- FLAME CLASS: 94V-0/94V-2
- COLOR: NATURAL

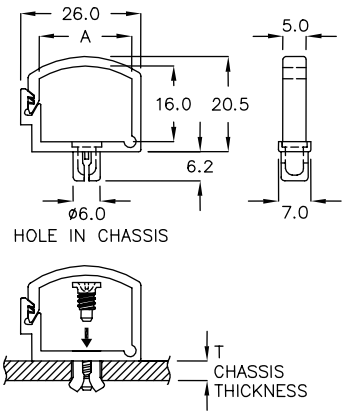

WITH LOCK FEATURE

PART NO	A	T CHASSIS THICKNESS	PACKAGE
CKP-16	20.0	1.6~2.6	500

电线固定座 WIRE MOUNT 6-71-3

- MATERIAL: NYLON 66(UL)
- FLAME CLASS: 94V-0/94V-2
- COLOR: NATURAL

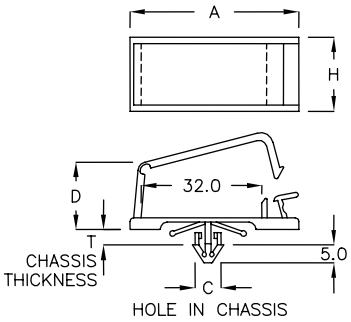

WITH LOCK FEATURE

PART NO	A	C HOLE IN CHASSIS	D	H	T CHASSIS THICKNESS	PACKAGE
FWH-01	44.8	ø6.4	17.5	18.8	1.8~3.2	200
FWH-02	44.45	ø6.3	12.3	19.0	0.5~1.8	

电线固定座 CABLE CLAMP 6-71-4

- MATERIAL: NYLON 66(UL)
- FLAME CLASS: 94V-0/94V-2
- COLOR: BLACK

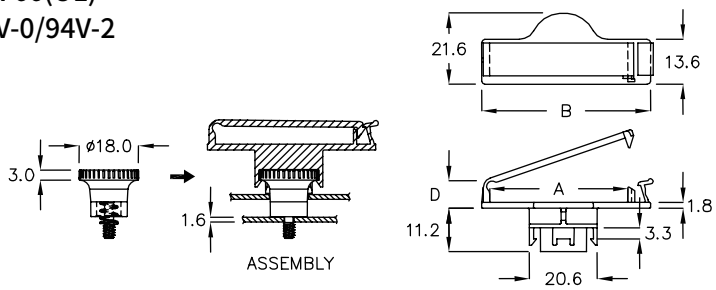

WITH LOCK FEATURE

PART NO	A	B	D	PACKAGE
FWTA-42A	42.0	51.2	8.4	100

电线固定座 CABLE CLAMP 6-72-1

- MATERIAL: NYLON 66(UL)
- FLAME CLASS: 94V-0/94V-2
- COLOR: BLACK

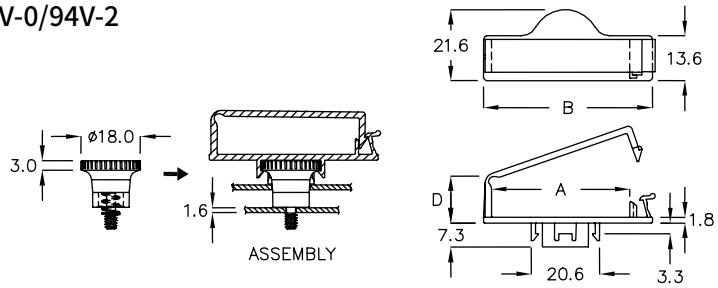

WITH LOCK FEATURE

PART NO	A	B	D	PACKAGE
FWTA-42C	42.0	51.2	14.3	100

电线固定座 WIRE MOUNT 6-72-2

- MATERIAL: NYLON 66(UL)
- FLAME CLASS: 94V-0/94V-2
- COLOR: NATURAL

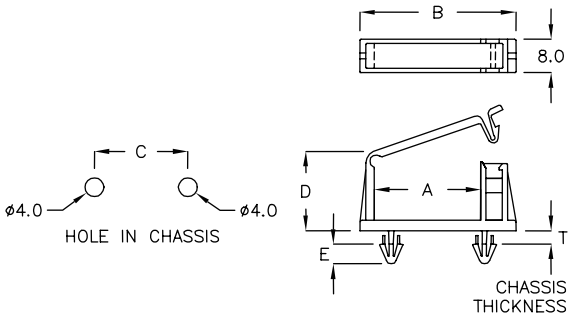

WITH LOCK FEATURE

PART NO	A	B	C	D	E	T CHASSIS THICKNESS	PACKAGE
CKK-3C	16.6	28.0	16.0	17.7	4.7	1.0	500
CKK-3A	16.6	28.0	16.0	18.8	4.9	3.0	
CKK-03	19.1	31.0	16.0	18.6	4.9	3.0	
CKK-04	24.1	34.3	20.0	17.9	4.8	3.0	
CKK-05	24.1	36.0	20.0	12.2	4.8	3.0	

电线固定座 WIRE MOUNT 6-72-3

- MATERIAL: NYLON 66(UL)
- FLAME CLASS: 94V-0/94V-2
- COLOR: NATURAL

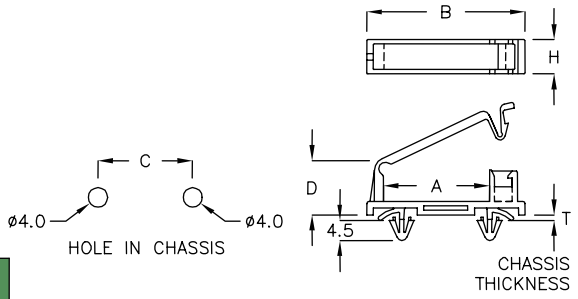

WITH LOCK FEATURE

PART NO	A	B	C	D	H	T CHASSIS THICKNESS	PACKAGE
CKK-3F	16.6	27.0	16.0	17.3	15.0	0.8~1.0	200
CKK-05A	24.1	36.0	20.0	12.4	8.0	0.8~1.0	500
CKK-05D	28.1	40.0	20.0	13.3	8.0	0.8~1.0	

电线固定座 WIRE MOUNT 6-72-4

- MATERIAL: NYLON 66(UL)
- FLAME CLASS: 94V-0/94V-2
- COLOR: NATURAL

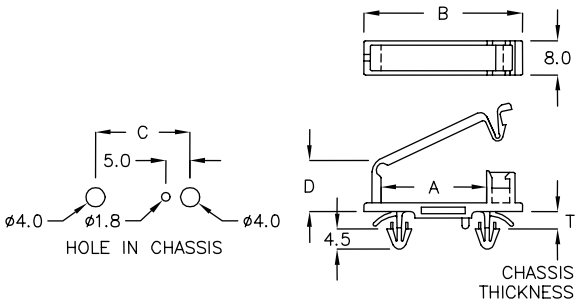

WITH LOCK FEATURE

PART NO	A	B	C	D	T CHASSIS THICKNESS	PACKAGE
CKK-05C	24.1	36.0	20.0	12.4	0.8~2.0	500

电线固定座 WIRE MOUNT 6-73-1

- MATERIAL: NYLON 66(UL)
- FLAME CLASS: 94V-0/94V-2
- COLOR: BLACK

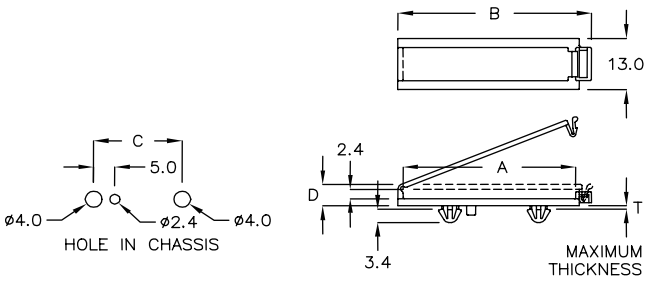

WITH LOCK FEATURE

PART NO	A	B	C	D	T MAXIMUM THICKNESS	PACKAGE
FAB-41K	41.0	45.9	21.0	5.4	0.5	200

电线固定座 WIRE MOUNT 6-73-2

- MATERIAL: NYLON 66(UL)
- FLAME CLASS: 94V-0/94V-2
- COLOR: NATURAL

可由板上拆卸

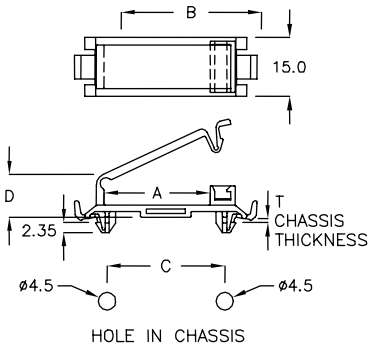

WITH LOCK FEATURE

PART NO	A	B	C	D	T CHASSIS THICKNESS	PACKAGE
CXR-27A	27.0	36.0	30.0	10.9	0.8	200

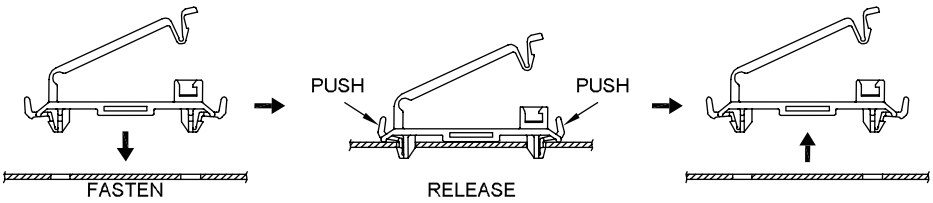

电线固定座 WIRE MOUNT 6-73-3

- MATERIAL: NYLON 66(UL)
- FLAME CLASS: 94V-0/94V-2
- COLOR: NATURAL

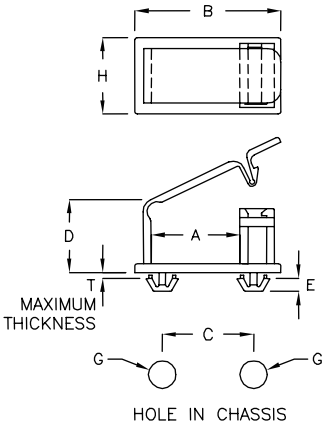

WITH LOCK FEATURE

PART NO	A	B	C	D	E	G	H	T MAXIMUM THICKNESS	PACKAGE
CKK-06	19.4	31.9	20.0	15.2	2.85	ø6.0	16.8	1.0	200
★ CKK-06A	19.4	31.9	20.0	15.2	2.85	ø6.0	16.8	1.2	500
CKK-5K	24.1	36.0	20.0	8.9	3.0	ø4.0	8.0	1.0	
CKK-24AF	24.1	34.3	20.0	17.9	2.8	ø4.0	8.0	0.8	

电线固定座 WIRE MOUNT 6-74-1

- MATERIAL: NYLON 66(UL)
- FLAME CLASS: 94V-0/94V-2
- COLOR: BLACK

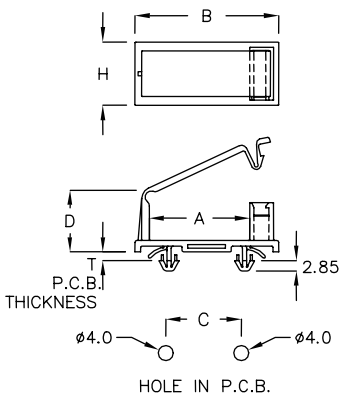

WITH LOCK FEATURE

PART NO	A	B	C	D	H	T P.C.B. THICKNESS	PACKAGE
CKK-26F	26.5	38.0	20.0	16.5	16.8	0.8~2.0	200

电线固定座 WIRE MOUNT 6-74-2

- MATERIAL: NYLON 66(UL)
- FLAME CLASS: 94V-0/94V-2
- COLOR: NATURAL,BLACK

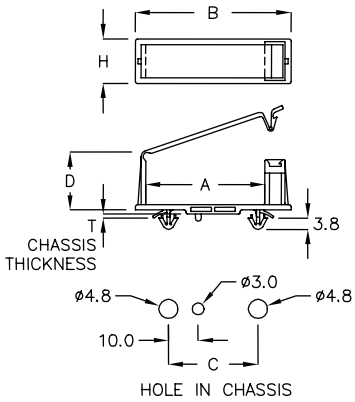

WITH LOCK FEATURE

PART NO	A	B	C	D	H	T CHASSIS THICKNESS	PACKAGE
CYA-40	40.0	52.3	30.0	10.3	15.0	0.8~1.0	100
CYA-40KM	40.0	52.3	33.0	23.4	15.0	0.8~1.0	
CYA-40PS	40.0	52.3	33.0	23.4	15.0	1.2~1.4	
CYA-45	45.0	57.3	30.0	13.8	17.0	0.8~1.0	
CYA-45AM	45.0	57.3	33.0	33.6	17.0	0.8~1.0	

电线固定座 WIRE MOUNT 6-74-3

- MATERIAL: NYLON 66(UL)
- FLAME CLASS: 94V-0/94V-2
- COLOR: BLACK

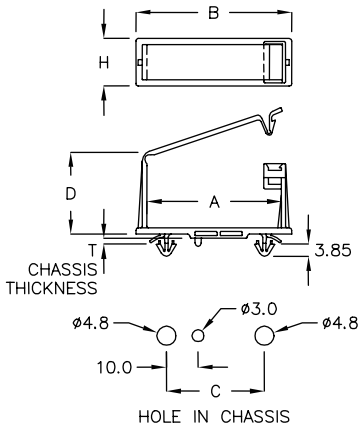

WITH LOCK FEATURE

PART NO	A	B	C	D	H	T CHASSIS THICKNESS	PACKAGE
CYAA-43	42.6	49.3	31.0	35.0	15.0	1.2~1.4	100

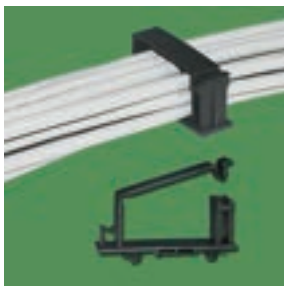

电线固定座 WIRE MOUNT 6-74-4

- MATERIAL: NYLON 66(UL)
- FLAME CLASS: 94V-0/94V-2
- COLOR: BLACK

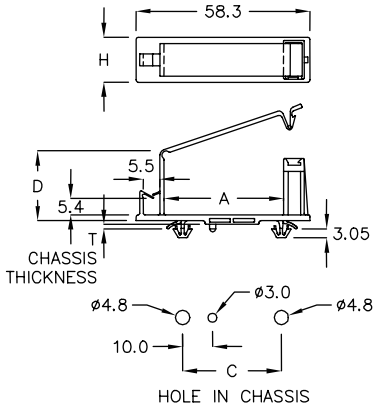

PART NO	A	C	D	H	T CHASSIS THICKNESS	PACKAGE
CYG-40RT	40.0	33.0	23.2	15.0	0.8~1.0	100

排线固定板 FLAT CABLE CLAMP 6-75-1

- MATERIAL: NYLON 66(UL)
- FLAME CLASS: 94V-0/94V-2
- COLOR: NATURAL

WITH LOCK FEATURE

PART NO	A	D	T CHASSIS THICKNESS	PACKAGE
FCC-20	31.3	7.1	0.8~2.0	500

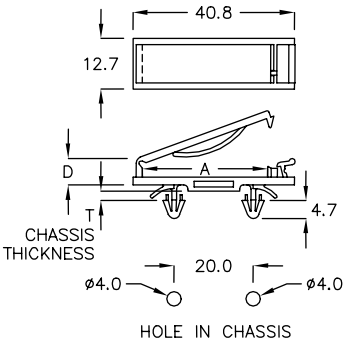

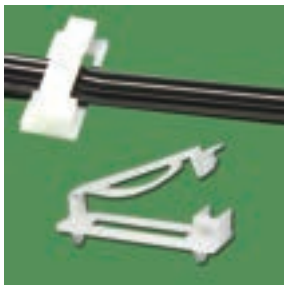

电线固定座 WIRE MOUNT 6-75-2

- MATERIAL: NYLON 66(UL)
- FLAME CLASS: 94V-0/94V-2
- COLOR: NATURAL

WITH LOCK FEATURE

PART NO	A	D	T CHASSIS THICKNESS	PACKAGE
FCS-20	33.6	10.7	1.4~1.6	200

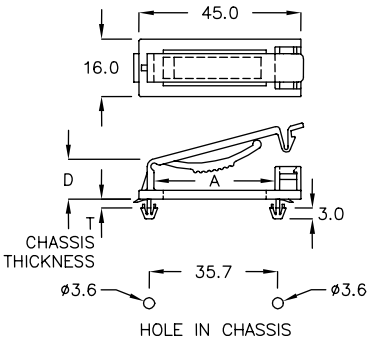

排线固定板 FLAT CABLE CLAMP 6-75-3

- MATERIAL: NYLON 66(UL)
- FLAME CLASS: 94V-0/94V-2
- COLOR: BLACK

WITH LOCK FEATURE

PART NO	A	T CHASSIS THICKNESS	PACKAGE
FCSD-21A	21.0	0.8~1.2	200

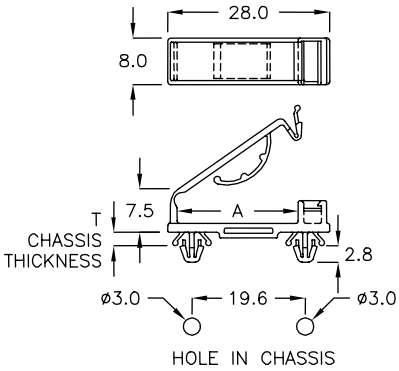

电线固定座 WIRE MOUNT 6-75-4

- MATERIAL: NYLON 66(UL)
- FLAME CLASS: 94V-0/94V-2
- COLOR: BLACK

WITH LOCK FEATURE

PART NO	A	D	T MAXIMUM THICKNESS	PACKAGE
FAA-40C	40.0	26.0	2.0	100

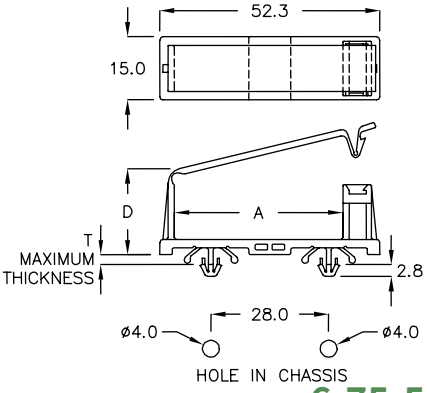

电线固定座 WIRE MOUNT 6-75-5

- MATERIAL: NYLON 66(UL)
- FLAME CLASS: 94V-0/94V-2
- COLOR: NATURAL

WITH LOCK FEATURE

PART NO	A	D	T CHASSIS THICKNESS	PACKAGE
FAA-31K	31.8	15.0	0.8~2.0	100

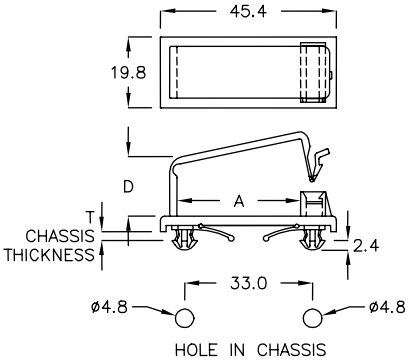

电线固定座 WIRE MOUNT 6-76-1

- MATERIAL: NYLON 66(UL)
- FLAME CLASS: 94V-0/94V-2
- COLOR: NATURAL

WITH LOCK FEATURE

PART NO	A	D	T CHASSIS THICKNESS	PACKAGE
FAA-50	64.0	9.0	1.8~2.3	100
FAA-51	64.0	15.4	1.8~2.3	

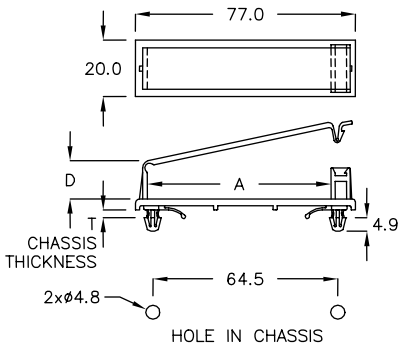

电线固定座 WIRE MOUNT 6-76-2

- MATERIAL: NYLON 66(UL)
- FLAME CLASS: 94V-0/94V-2
- COLOR: NATURAL

WITH LOCK FEATURE

PART NO	A	D	T CHASSIS THICKNESS	PACKAGE
FAA-51A	65.1	15.4	2.0~3.4	100

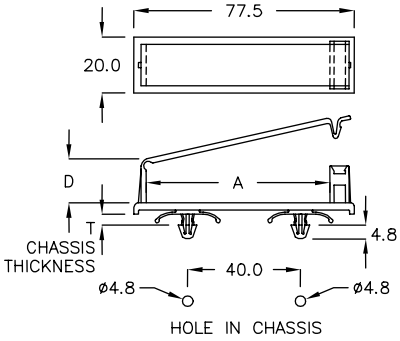

电线固定座 WIRE MOUNT 6-76-3

- MATERIAL: NYLON 66(UL)
- FLAME CLASS: 94V-0/94V-2
- COLOR: NATURAL

WITH LOCK FEATURE

PART NO	A	D	T MAXIMUM THICKNESS	PACKAGE
FCC-40A	54.0	16.0	2.0	100

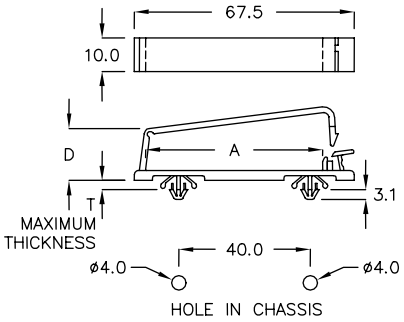

电线固定座 WIRE MOUNT 6-76-4

- MATERIAL: NYLON 66(UL)
- FLAME CLASS: 94V-0/94V-2
- COLOR: NATURAL

WITH LOCK FEATURE

PART NO	A	D	T MAXIMUM THICKNESS	PACKAGE
FCC-40D	54.0	16.0	2.0	100

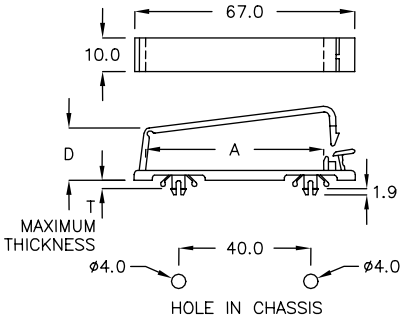

电线固定座 WIRE MOUNT 6-76-5

- MATERIAL: NYLON 66(UL)
- FLAME CLASS: 94V-0/94V-2
- COLOR: NATURAL

WITH LOCK FEATURE

PART NO	A	B	D	H	T CHASSIS THICKNESS	PACKAGE
CXK-90A	103.0	90.0	13.6	20.0	2.0~2.3	100

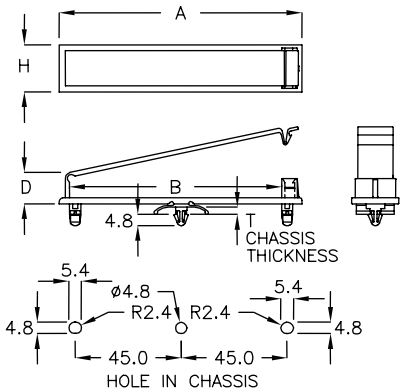

电线固定座 WIRE MOUNT 6-77-1

- MATERIAL: NYLON 66(UL)
- FLAME CLASS: 94V-0/94V-2
- COLOR: NATURAL

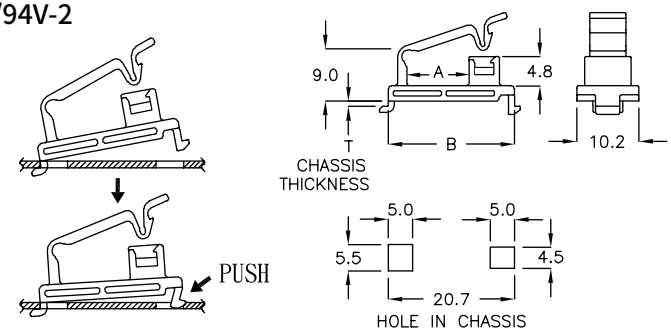

WITH LOCK FEATURE

PART NO	A	B	T CHASSIS THICKNESS	PACKAGE
FCZ-10C	10.2	20.7	0.8	200

电线固定座 WIRE MOUNT 6-77-2

- MATERIAL: NYLON 66(UL)
- FLAME CLASS: 94V-0/94V-2
- COLOR: BLACK

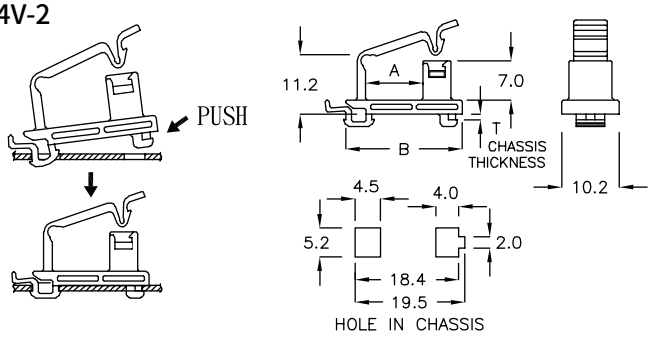

WITH LOCK FEATURE

PART NO	A	B	T CHASSIS THICKNESS	PACKAGE
FCX-10A	10.2	20.7	0.8	200

电线固定座 WIRE MOUNT 6-77-3

- MATERIAL: NYLON 66(UL)
- FLAME CLASS: 94V-0/94V-2
- COLOR: BLACK

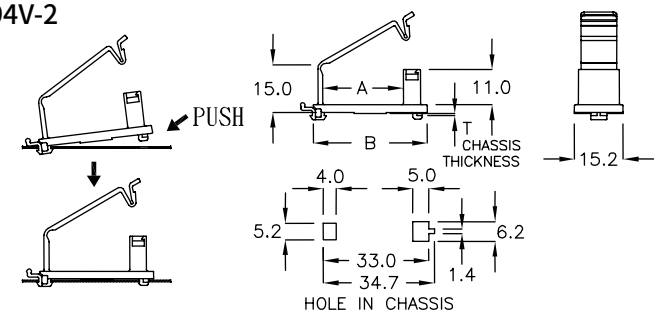

PART NO	A	B	T CHASSIS THICKNESS	PACKAGE
FCX-25GL	25.25	35.65	0.6	200

电线固定座 WIRE MOUNT 6-77-4

- MATERIAL: NYLON 66(UL)
- FLAME CLASS: 94V-0/94V-2
- COLOR: BLACK

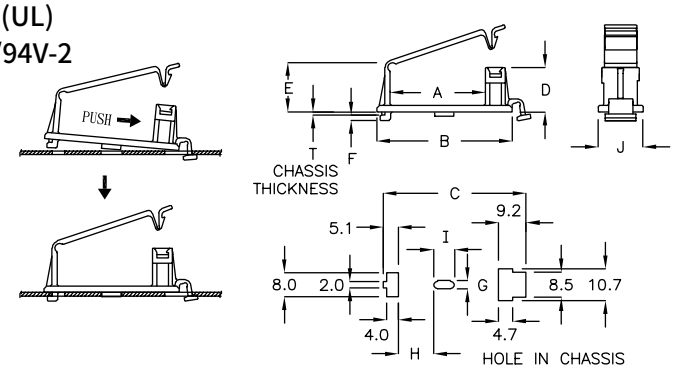

WITH LOCK FEATURE

PART NO	A	B	C	D	E	F	G	H	I	J	T CHASSIS THICKNESS	PACKAGE
FCQ-19A	19.4	31.9	33.35	14.0	16.0	1.8	2.3	6.75	6.65	16.8	0.7~0.8	200
FCQ-27	27.0	40.5	43.3	14.75	17.0	1.8	2.3	11.7	6.65	15.0	0.7~0.8	
FCQ-31HS	31.3	44.8	47.8	14.75	17.0	1.0	2.6	12.8	6.65	15.0	0.7~0.8	
FCQ-31GR	31.6	45.0	47.8	14.75	16.6	1.0	2.6	12.8	6.6	15.0	1.2	

电线固定座 WIRE MOUNT 6-78-1

- MATERIAL: NYLON 66(UL)
- FLAME CLASS: 94V-0/94V-2
- COLOR: BLACK

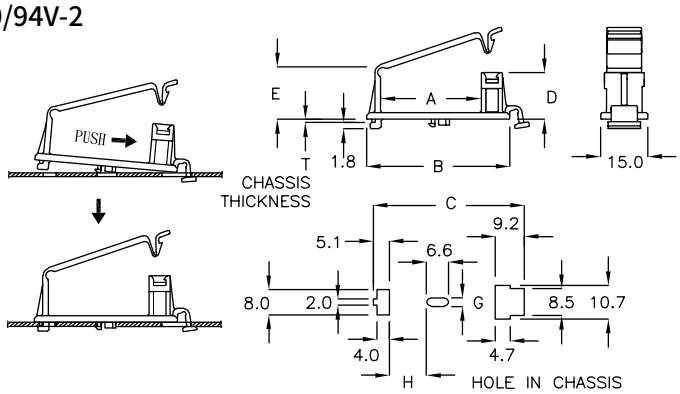

WITH LOCK FEATURE

PART NO	A	B	C	D	E	G	H	T CHASSIS THICKNESS	PACKAGE
FCQ-31K	31.3	44.8	47.8	14.75	17.0	2.6	12.8	0.8	200

电线固定座 WIRE MOUNT 6-78-2

- MATERIAL: NYLON 66(UL)
- FLAME CLASS: 94V-0/94V-2
- COLOR: BLACK

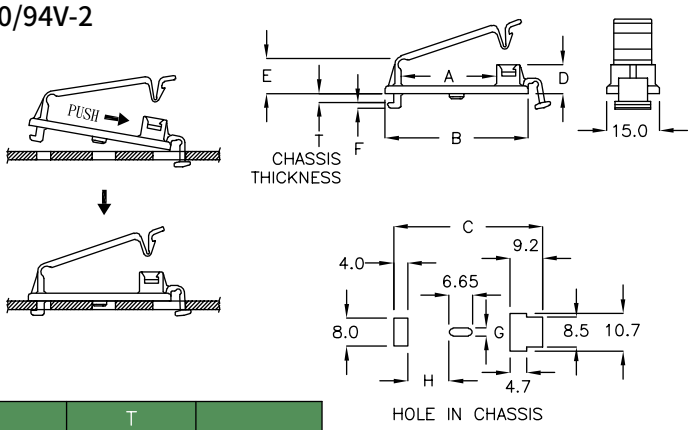

PART NO	A	B	C	D	E	F	G	H	T CHASSIS THICKNESS	PACKAGE
FCQ-27LR	27.0	40.5	42.2	8.2	10.0	1.5	2.3	11.7	2.4	200

电线固定座 WIRE MOUNT 6-78-3

- MATERIAL: NYLON 66(UL)
- FLAME CLASS: 94V-0/94V-2
- COLOR: BLACK

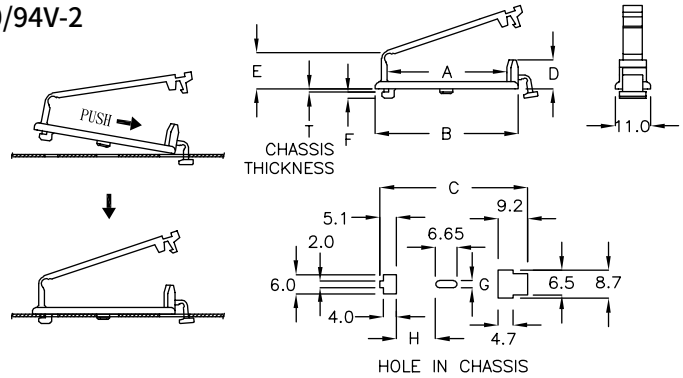

PART NO	A	B	C	D	E	F	G	H	T CHASSIS THICKNESS	PACKAGE
FCQ-35JK	37.1	44.3	45.75	9.05	11.4	1.8	2.3	12.1	0.8	100

电线固定座 WIRE MOUNT 6-79-1

- MATERIAL: NYLON 66(UL)
- FLAME CLASS: 94V-0/94V-2
- COLOR: NATURAL

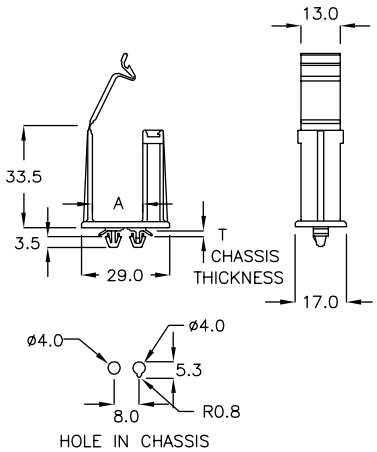

WITH LOCK FEATURE

PART NO	A	T CHASSIS THICKNESS	PACKAGE
CYB-16A	16.7	0.8~1.2	100

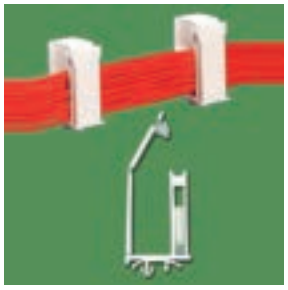

电线固定座 WIRE MOUNT 6-79-2

- MATERIAL: NYLON 66(UL)
- FLAME CLASS: 94V-0/94V-2
- COLOR: NATURAL,BLACK

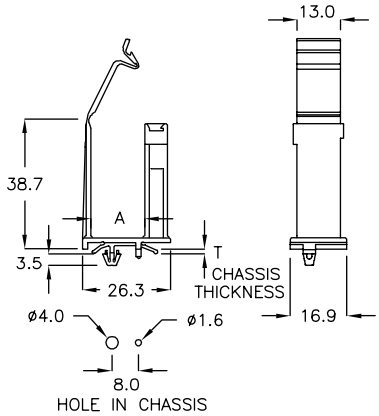

WITH LOCK FEATURE

PART NO	A	T CHASSIS THICKNESS	PACKAGE
CYC-16F	16.0	0.8~1.0	100

电线固定座 WIRE MOUNT 6-79-3

- MATERIAL: NYLON 66(UL)
- FLAME CLASS: 94V-0/94V-2
- COLOR: NATURAL,BLACK

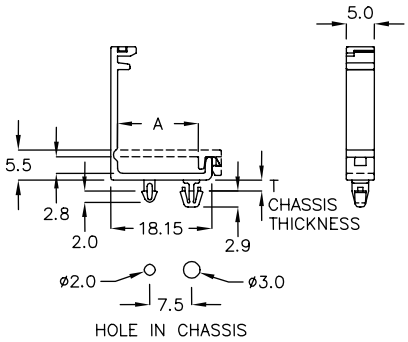

WITH LOCK FEATURE

PART NO	A	T CHASSIS THICKNESS	PACKAGE
CYQ-15A	14.5	1.5	500

电线固定座 WIRE MOUNT 6-79-4

- MATERIAL: NYLON 66(UL)
- FLAME CLASS: 94V-0/94V-2
- COLOR: BLACK

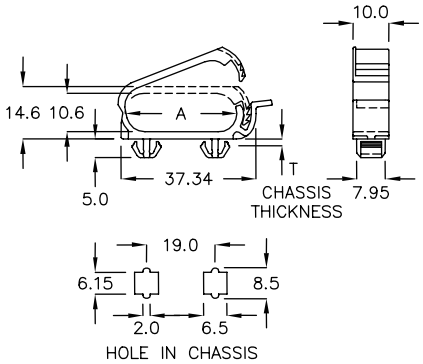

WITH LOCK FEATURE

PART NO	A	T CHASSIS THICKNESS	PACKAGE
FQCM-37A	30.3	0.8~1.2	500

隔离束线座 WIRE SADDLE 6-80-1

- MATERIAL: NYLON 66(UL)
- FLAME CLASS: 94V-0/94V-2
- COLOR: BLACK

PART NO	A CLOSE DIA	T CHASSIS THICKNESS	PACKAGE
CMW-08	ø7.7	0.8	500

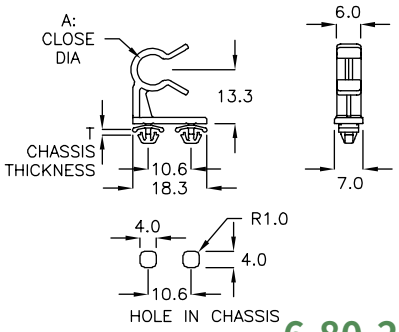

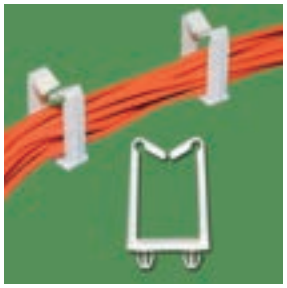

电线固定座 WIRE MOUNT 6-80-2

- MATERIAL: NYLON 66(UL)
- FLAME CLASS: 94V-0/94V-2
- COLOR: NATURAL

PART NO	A	T CHASSIS THICKNESS	PACKAGE
CYL-12M	12.0	1.0	500

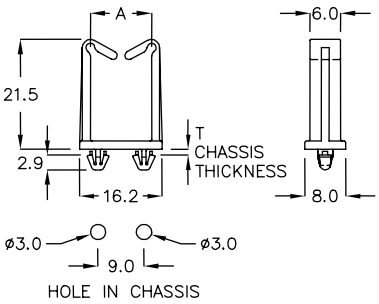

隔离束线座 WIRE SADDLE 6-80-3

- MATERIAL: PP
- COLOR: BLACK

PART NO	A	D	PACKAGE
CRN-16	16.0	20.0	200

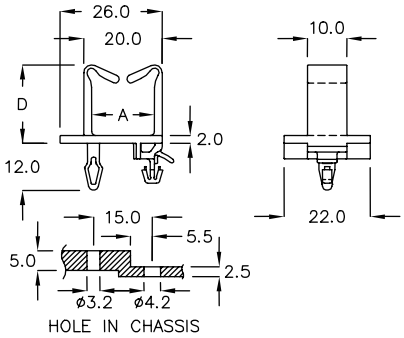

隔离束线座 WIRE SADDLE 6-80-4

- MATERIAL: NYLON 66(UL)
- FLAME CLASS: 94V-0/94V-2
- COLOR: NATURAL,BLACK

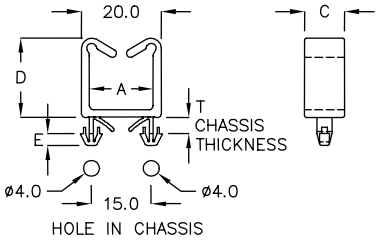

PART NO	A	C	D	E	T CHASSIS THICKNESS	PACKAGE
CRC-16K	16.0	10.0	20.0	3.0	0.8~2.3	200
CRC-16PS	16.0	10.0	24.0	2.4	1.0~2.3	
CRC-16F	16.4	10.4	24.5	2.1	1.0~2.3	

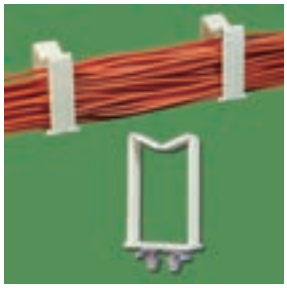

电线固定座 WIRE MOUNT 6-80-5

- MATERIAL: NYLON 66(UL)
- FLAME CLASS: 94V-0/94V-2
- COLOR: NATURAL

PART NO	A	T CHASSIS THICKNESS	PACKAGE
CYD-20A	20.8	0.8~1.2	100

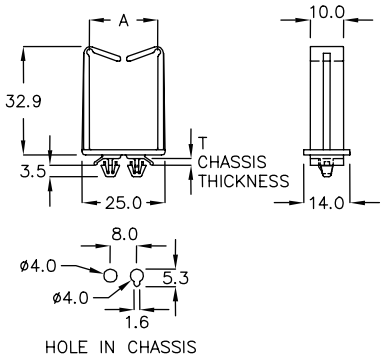

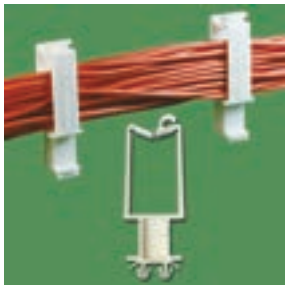

隔离束线座 WIRE SADDLE 6-81-1

- MATERIAL: NYLON 66(UL)
- FLAME CLASS: 94V-0/94V-2
- COLOR: NATURAL

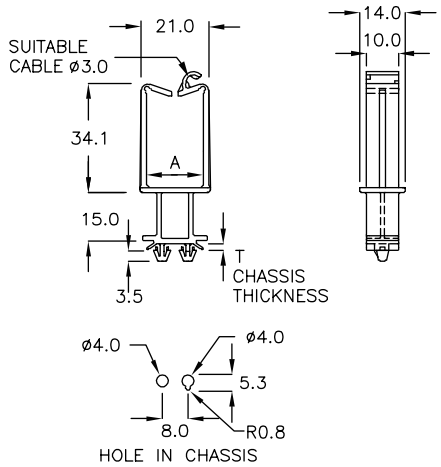

PART NO	A	T CHASSIS THICKNESS	PACKAGE
CYM-17A	17.8	0.8~1.2	100

电线固定座 WIRE MOUNT 6-81-2

- MATERIAL: NYLON 66(UL)
- FLAME CLASS: 94V-0/94V-2
- COLOR: NATURAL

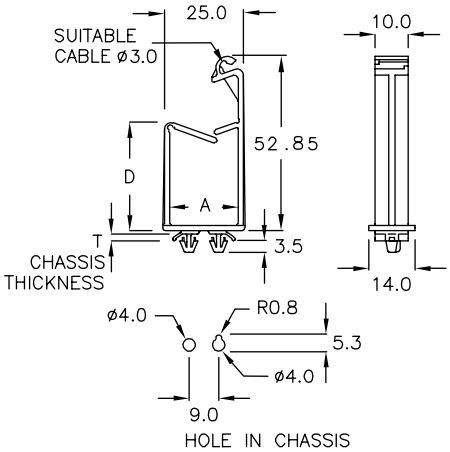

PART NO	A	D	T CHASSIS THICKNESS	PACKAGE
CYR-20K	20.8	32.8	0.8~1.2	100

隔离束线座 WIRE SADDLE 6-81-3

- MATERIAL: NYLON 66(UL)
- FLAME CLASS: 94V-0/94V-2
- COLOR: BLACK

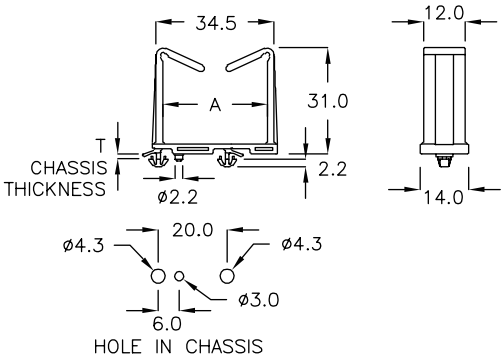

PART NO	A	T CHASSIS THICKNESS	PACKAGE
CYP-30MC	30.5	0.8~1.2	200

隔离束线座 WIRE SADDLE 6-81-4

- MATERIAL: NYLON 66(UL)
- FLAME CLASS: 94V-0/94V-2
- COLOR: BLACK

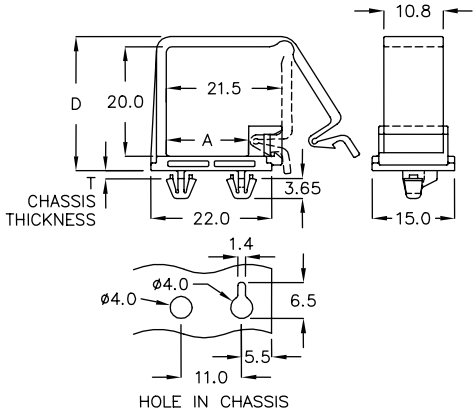

WITH LOCK FEATURE

PART NO	A	D	T CHASSIS THICKNESS	PACKAGE
CKKS-20KY	15.0	24.4	1.2	500

隔离束线座 WIRE SADDLE 6-82-1

- MATERIAL: NYLON 66(UL)
- FLAME CLASS: 94V-0/94V-2
- COLOR: BLACK

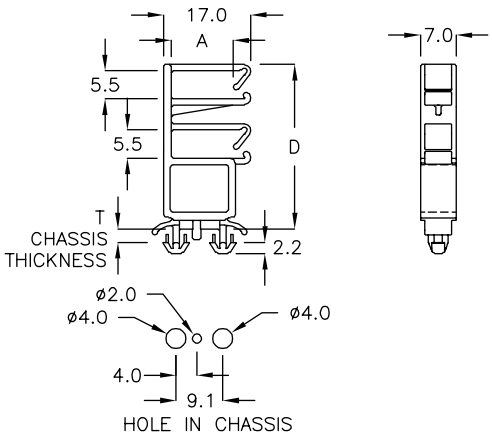

PART NO	A	D	T CHASSIS THICKNESS	PACKAGE
FYH-5K	12.0	31.95	1.6~2.4	100

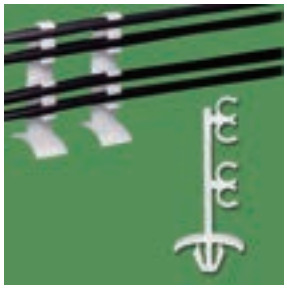

隔离束线座 WIRE SADDLE 6-82-2

- MATERIAL: POM
- COLOR: NATURAL

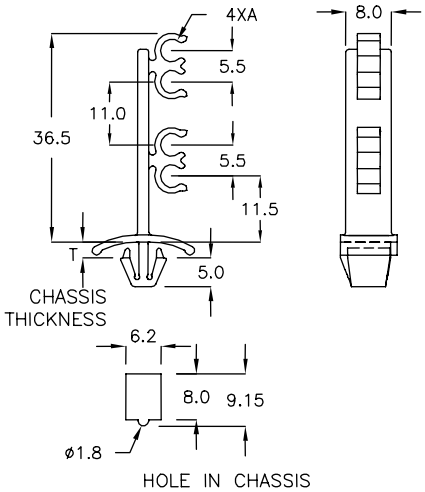

PART NO	A	T CHASSIS THICKNESS	PACKAGE
CTK-44Q	ø4.0	1.0~2.0	200

隔离束线座 WIRE SADDLE 6-82-3

- MATERIAL: POM
- COLOR: NATURAL

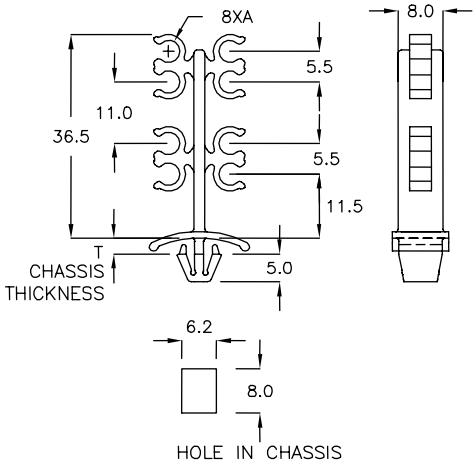

PART NO	A	T CHASSIS THICKNESS	PACKAGE
CTM-44P	ø4.0	1.0~2.0	200

电线固定座 WIRE MOUNT 6-82-4

- MATERIAL: NYLON 66(UL)
- FLAME CLASS: 94V-0/94V-2
- COLOR: NATURAL

WITH LOCK FEATURE

PART NO	A CLOSE DIA	T CHASSIS THICKNESS	PACKAGE
FWW-40	ø22.5~ø26.5	0.8~2.0	100
FWW-40C	ø22.5~ø26.5	0.8	

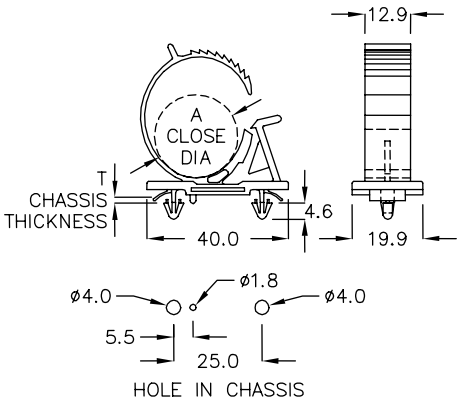

电线固定座 WIRE MOUNT 6-83-1

- MATERIAL: NYLON 66(UL)
- FLAME CLASS: 94V-0/94V-2
- COLOR: NATURAL

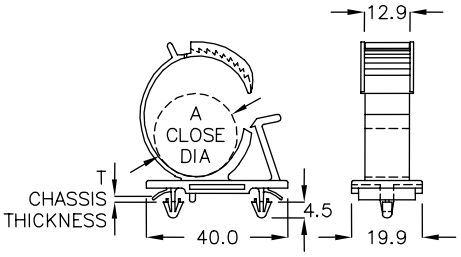

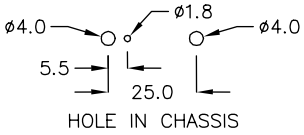

WITH LOCK FEATURE

PART NO	A CLOSE DIA	T CHASSIS THICKNESS	PACKAGE
FWQ−40	ø22.5~ø26.5	0.8~2.0	100

电线固定座 WIRE MOUNT 6-83-2

- MATERIAL: NYLON 66(UL)
- FLAME CLASS: 94V-0/94V-2
- COLOR: NATURAL

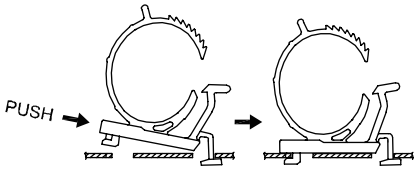

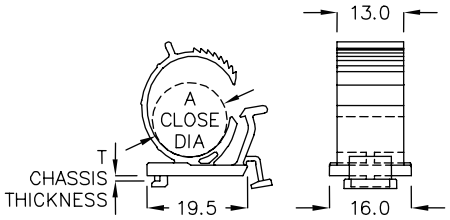

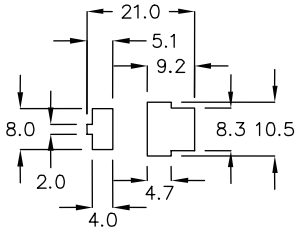

WITH LOCK FEATURE

PART NO	A CLOSE DIA	T CHASSIS THICKNESS	PACKAGE
FW−24	ø13.0~ø14.5	0.8	200

电线固定座 WIRE MOUNT 6-83-3

- MATERIAL: NYLON 66(UL)
- FLAME CLASS: 94V-0/94V-2
- COLOR: NATURAL

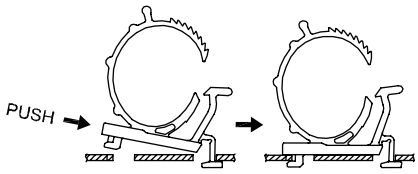

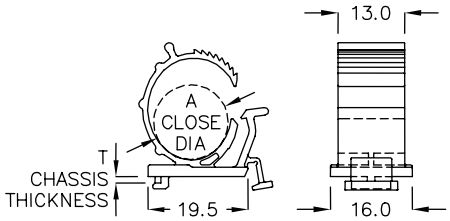

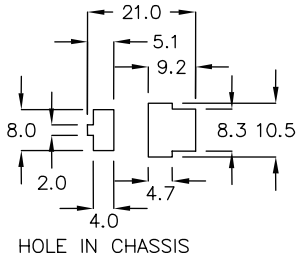

WITH LOCK FEATURE

PART NO	A CLOSE DIA	T CHASSIS THICKNESS	PACKAGE
FW−24CM	ø12.5~ø15.0	1.0	200

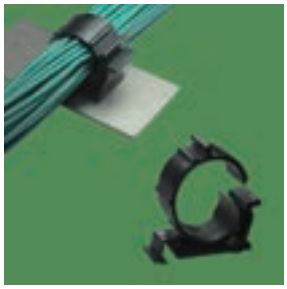

电线固定座 WIRE MOUNT 6-84-1

- MATERIAL: NYLON 66(UL)
- FLAME CLASS: 94V-0/94V-2
- COLOR: BLACK

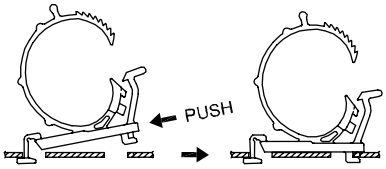

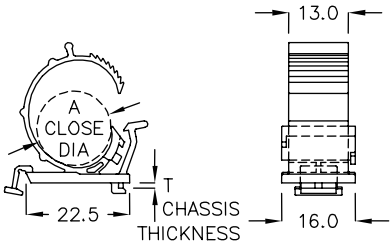

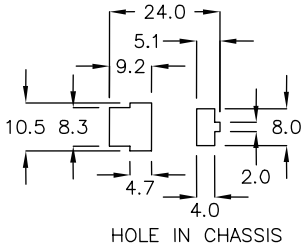

WITH LOCK FEATURE

PART NO	A CLOSE DIA	T CHASSIS THICKNESS	PACKAGE
FDH-14J	ø14.5~ø17.0	1.0	100

电线固定座 WIRE MOUNT 6-84-2

- MATERIAL: NYLON 66(UL)
- FLAME CLASS: 94V-0/94V-2
- COLOR: BLACK

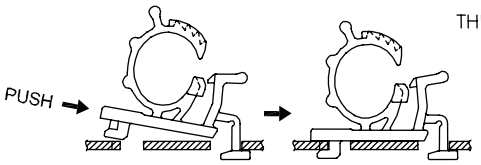

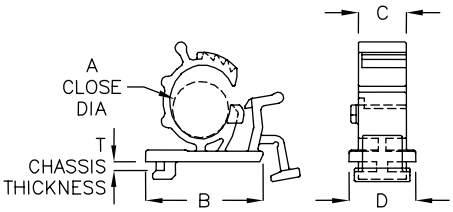

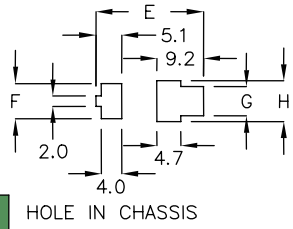

WITH LOCK FEATURE

PART NO	A CLOSE DIA	B	C	D	E	F	G	H	T CHASSIS THICKNESS	PACKAGE
FWR-6A	ø6.0~ø7.0	15.85	6.5	9.0	17.7	7.0	5.8	8.0	0.9~1.1	500
FWR-7M	ø7.5~ø8.5	16.0	6.5	9.0	17.7	7.0	5.8	8.0	0.9~1.1	
FWR-9C	ø8.5~ø10.0	18.8	13.0	16.0	21.0	8.0	8.3	10.5	0.9~1.0	200

排线固定板 FLAT CABLE CLAMP 6-84-3

- MATERIAL: NYLON 66(UL)
- FLAME CLASS: 94V-0/94V-2
- COLOR: NATURAL

WITH LOCK FEATURE

PART NO	A	B	PACKAGE
FCM-25J	24.8	31.0	200

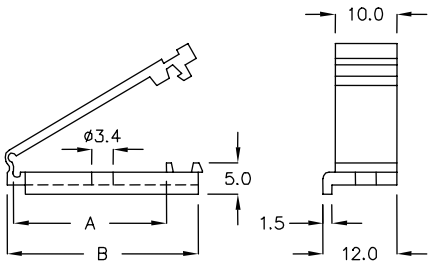

排线固定板 FLAT CABLE CLAMP 6-84-4

- MATERIAL: NYLON 66(UL)
- FLAME CLASS: 94V-0/94V-2
- COLOR: NATURAL

WITH LOCK FEATURE

PART NO	A	B	PACKAGE
FCM-26	24.8	31.0	200

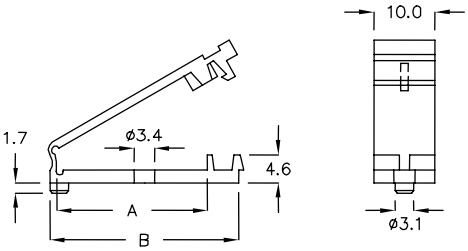

排线固定板 FLAT CABLE CLAMP 6-85-1

- MATERIAL: NYLON 66(UL)
- FLAME CLASS: 94V-0/94V-2
- COLOR: NATURAL

WITH LOCK FEATURE

PART NO	A	B	PACKAGE
LFD-25	31.2	40.5	200

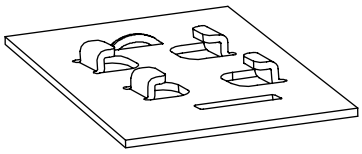

HOLE IN CHASSIS (REF.)

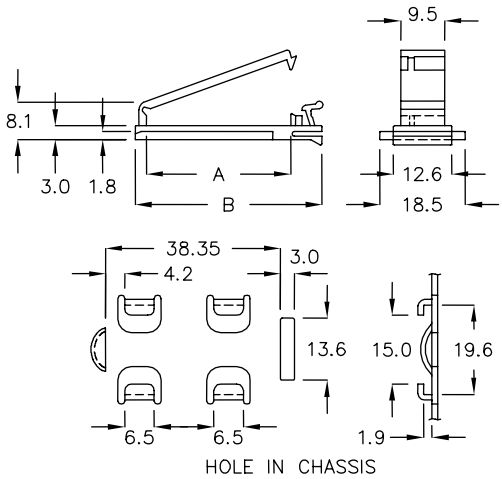

排线固定板 FLAT CABLE CLAMP 6-85-2

- MATERIAL: NYLON 66(UL)
- FLAME CLASS: 94V-0/94V-2
- COLOR: NATURAL

WITH LOCK FEATURE

PART NO	A	B	PACKAGE
LFN-36C	36.0	45.0	100

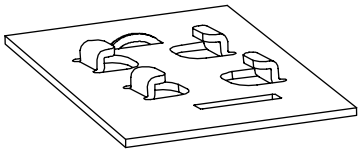

HOLE IN CHASSIS (REF.)

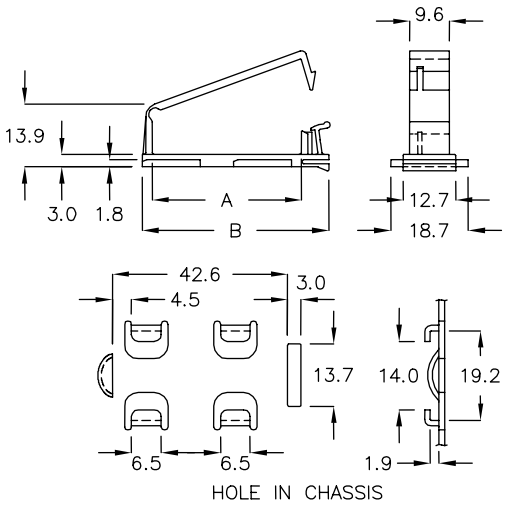

排线固定板 FLAT CABLE CLAMP 6-85-3

- MATERIAL: NYLON 66(UL)
- FLAME CLASS: 94V-0/94V-2
- COLOR: NATURAL

WITH LOCK FEATURE

PART NO	A	B	PACKAGE
LFN-40K	40.75	54.65	100

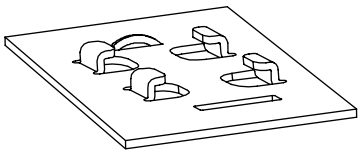

HOLE IN CHASSIS (REF.)

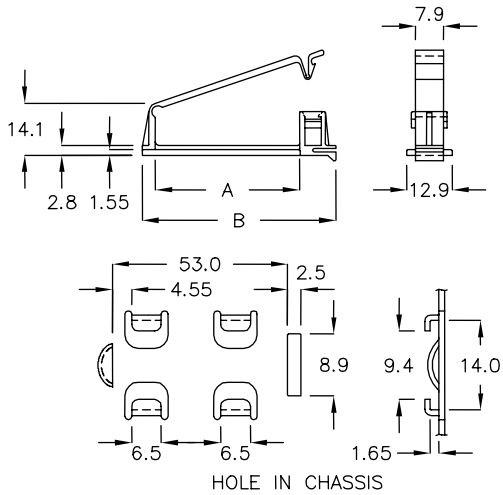

排线固定板 FLAT CABLE CLAMP 6-86-1

- MATERIAL: NYLON 66(UL)
- FLAME CLASS: 94V-0/94V-2
- COLOR: BLACK

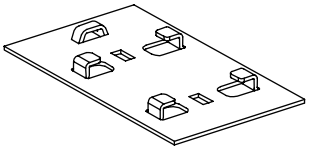

HOLE IN CHASSIS (REF.)

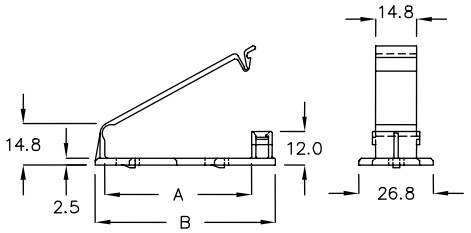

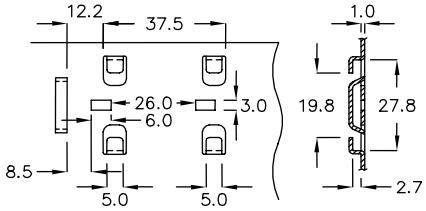

WITH LOCK FEATURE

PART NO	A	B	PACKAGE
LFZ-52K	52.6	64.5	100

排线固定板 FLAT CABLE CLAMP 6-86-2

- MATERIAL: NYLON 66(UL)
- FLAME CLASS: 94V-0/94V-2
- COLOR: BLACK

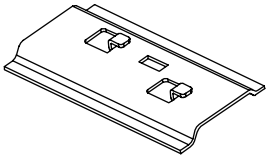

HOLE IN CHASSIS (REF.)

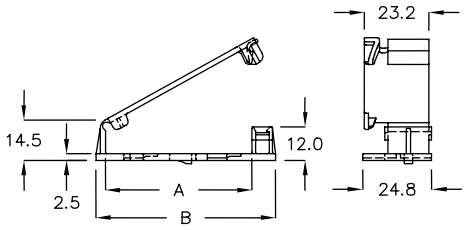

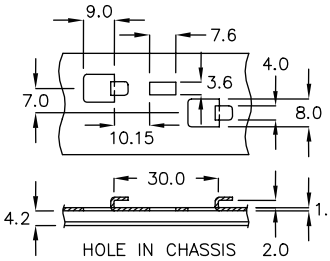

WITH LOCK FEATURE

PART NO	A	B	PACKAGE
LFZN-52A	52.6	64.5	100

电线固定板 CABLE CLAMP 6-86-3

- MATERIAL: NYLON 66(UL)
- FLAME CLASS: 94V-0/94V-2
- COLOR: BLACK

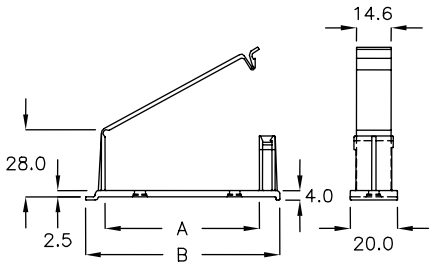

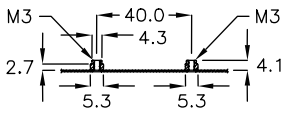

WITH LOCK FEATURE

PART NO	A	B	PACKAGE
FCWA-65KC	65.1	82.1	100

电线固定板 CABLE CLAMP 6-86-4

- MATERIAL: NYLON 66(UL)
- FLAME CLASS: 94V-0/94V-2
- COLOR: BLACK

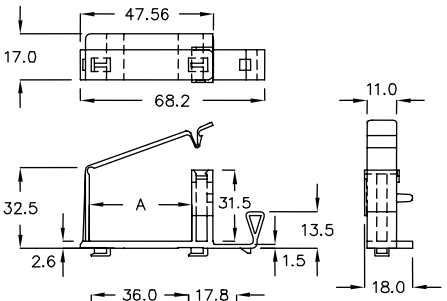

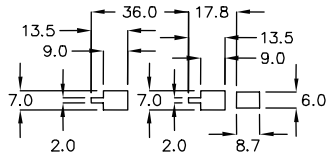

CHASSIS THICKNESS:1.5mm

WITH LOCK FEATURE

PART NO	A	PACKAGE
FCAT-38D	38.0	100

电线固定板 CABLE CLAMP 6-87-1

- MATERIAL: NYLON 66(UL)
- FLAME CLASS: 94V-0/94V-2
- COLOR: BLACK

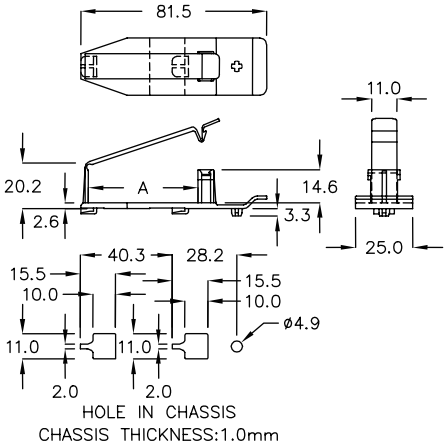

WITH LOCK FEATURE

PART NO	A	PACKAGE
FCA-48C	48.0	100

隔离束线座 WIRE SADDLE 6-87-2

- MATERIAL: NYLON 66(UL)
- FLAME CLASS: 94V-0/94V-2
- COLOR: BLACK

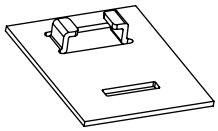

HOLE IN CHASSIS (REF.)

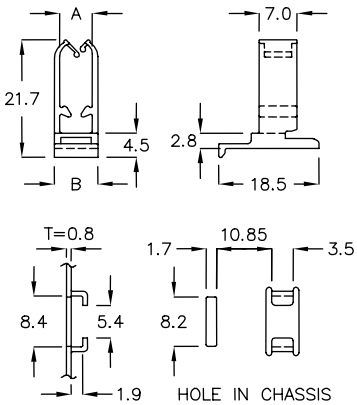

PART NO	A	B	PACKAGE
CYJ-6A	6.0	8.0	500

排线固定板 FLAT CABLE CLAMP 6-87-3

- MATERIAL: NYLON 66(UL)
- FLAME CLASS: 94V-0/94V-2
- COLOR: NATURAL,BLACK

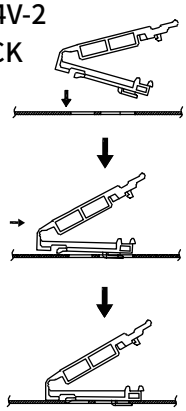

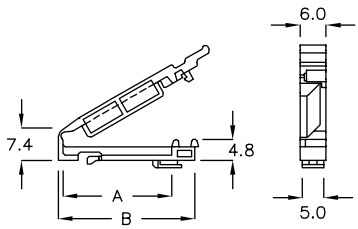

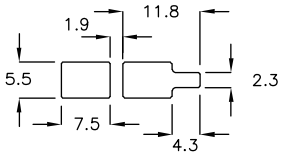

HOLE IN CHASSIS
CHASSIS THICKNESS: 0.8 mm

WITH LOCK FEATURE

PART NO	A	B	PACKAGE
FCK-31M	24.9	31.3	500

排线固定板 FLAT CABLE CLAMP 6-87-4

- MATERLIAL: NYLON 66(UL)
- FLAME CLASS: 94V-0/94V-2
- COLOR: NATURAL

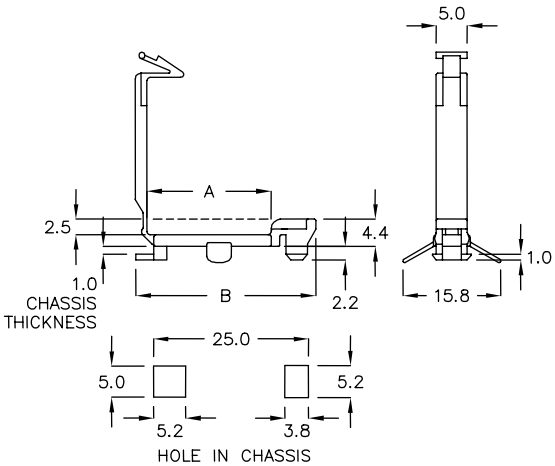

WITH LOCK FEATURE

PART NO	A	B	PACKAGE
CUD-20	20.0	29.0	200

电线固定板 WIRE MOUNT 6-88-1

- MATERIAL: NYLON 66(UL)
- FLAME CLASS: 94V-0/94V-2
- COLOR: BLACK

NEW

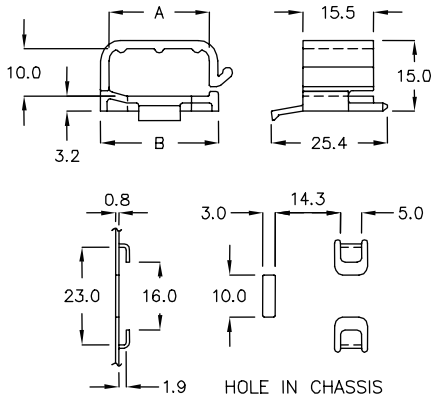

	PART NO	A	B	PACKAGE
★	FYC-22GL	22.0	25.8	200

电线固定板 WIRE MOUNT 6-88-2

- MATERIAL: NYLON 66(UL)
- FLAME CLASS: 94V-0/94V-2
- COLOR: BLACK

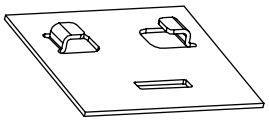

HOLE IN CHASSIS (REF.)

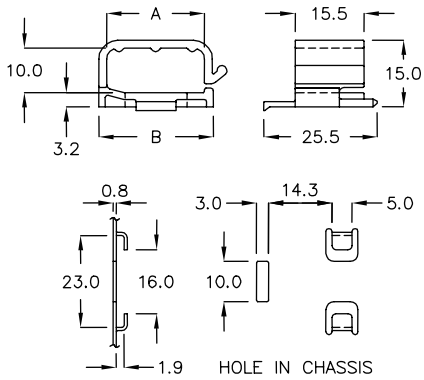

PART NO	A	B	PACKAGE
FYC-22H	22.0	25.8	200

电线固定板 WIRE MOUNT 6-88-3

- MATERIAL: NYLON 66(UL)
- FLAME CLASS: 94V-0/94V-2
- COLOR: BLACK

NEW

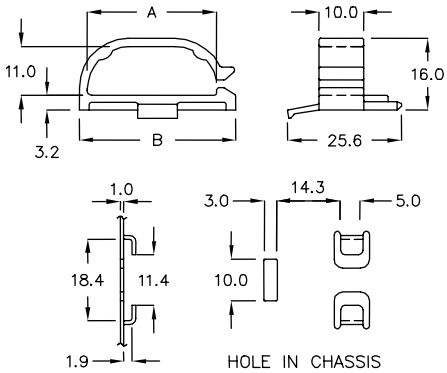

	PART NO	A	B	PACKAGE
★	FYC-29T	29.0	35.2	200

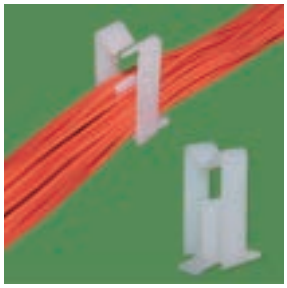

电线固定板 WIRE MOUNT 6-88-4

- MATERIAL: NYLON 66(UL)
- FLAME CLASS: 94V-0/94V-2
- COLOR: BLACK

NEW

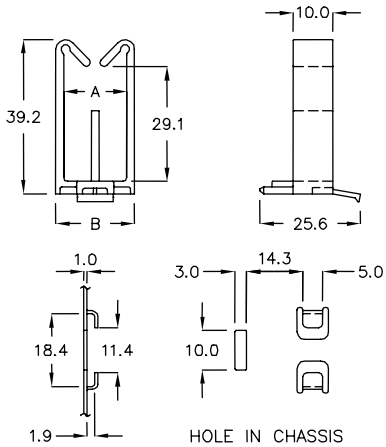

	PART NO	A	B	PACKAGE
★	FYCA-16H	16.0	20.0	200
★	FYCA-20K	20.8	25.8	200

电线固定座 WIRE MOUNT 6-89-1

- MATERIAL: NYLON 66(UL)
- FLAME CLASS: 94V-0/94V-2
- COLOR: NATURAL

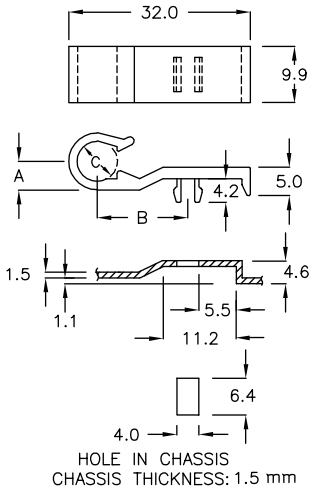

PART NO	A	B	C	PACKAGE
CU-07C	5.0	16.0	ø6.9	500

压线座 WIRE MOUNT 6-89-2

- MATERIAL: NYLON 66(UL)
- FLAME CLASS: 94V-0/94V-2
- COLOR: NATURAL

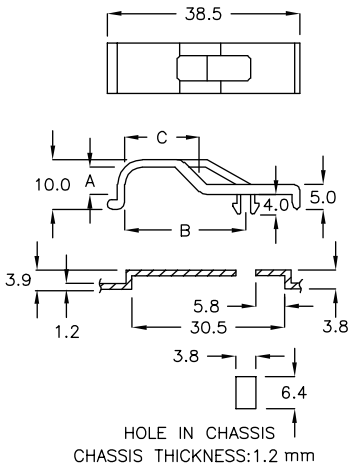

PART NO	A	B	C	PACKAGE
CU-07F	5.5	24.2	15.0	500

排线固定夹 FLAT CABLE CLAMP 6-89-3

- MATERIAL: NYLON 66(UL)
- FLAME CLASS: 94V-0/94V-2
- COLOR: NATURAL

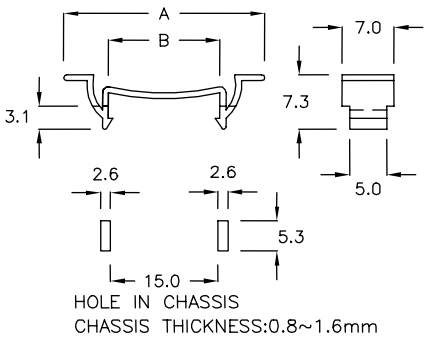

PART NO	A	B	PACKAGE
FBC-15	27.0	15.0	500

排线固定夹 FLAT CABLE CLAMP 6-89-4

- MATERIAL: NYLON 66(UL)
- FLAME CLASS: 94V-0/94V-2
- COLOR: NATURAL

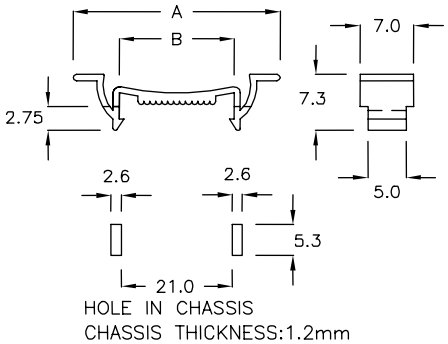

PART NO	A	B	PACKAGE
FBC-21	33.0	21.0	500

电线固定扣 WIRE CLIP 6-90-1

- MATERIAL: NYLON 66(UL)
- FLAME CLASS: 94V-0/94V-2
- COLOR: BLACK

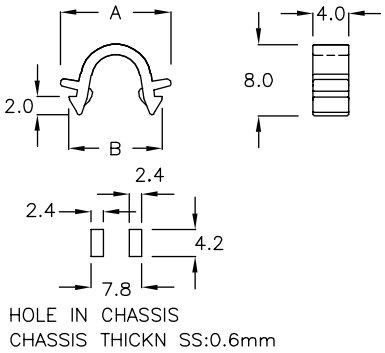

PART NO	A	B	PACKAGE
FBM-10A	12.35	10.45	2000

电线固定扣 CABLE CLAMP 6-90-2

- MATERIAL: NYLON 66(UL)
- FLAME CLASS: 94V-0/94V-2
- COLOR: NATURAL

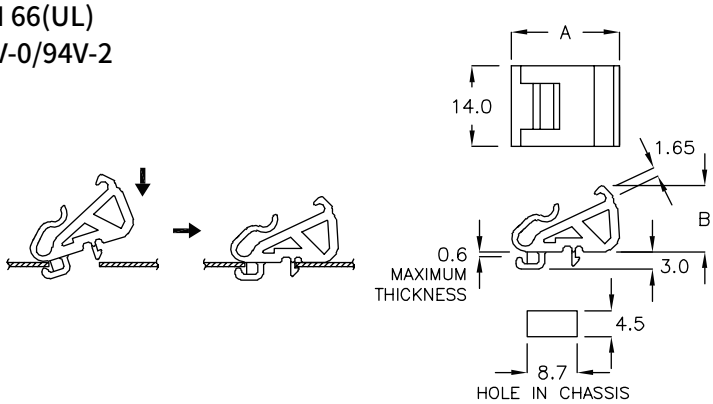

PART NO	A	B	PACKAGE
FDP-19	18.8	11.55	500

排线固定夹 FLAT CABLE CLAMP 6-90-3

- MATERIAL: NYLON 66(UL)
- FLAME CLASS: 94V-0/94V-2
- COLOR: NATURAL

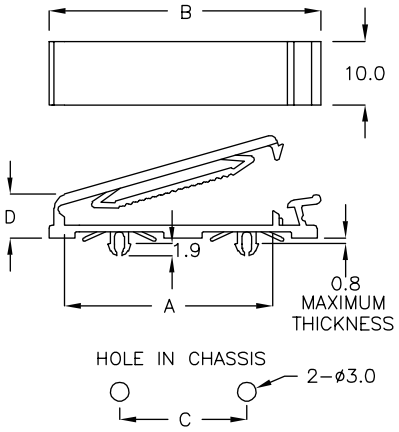

WITH LOCK FEATURE

PART NO	A	B	C	D	PACKAGE
FCJ-25K	32.7	42.7	20.0	6.9	100

排线固定夹 FLAT CABLE CLAMP 6-90-4

- MATERIAL: NYLON 66(UL)
- FLAME CLASS: 94V-0/94V-2
- COLOR: NATURAL

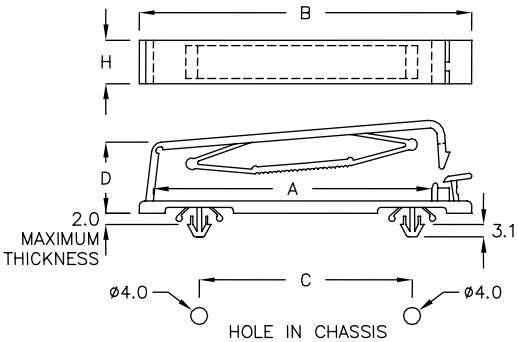

WITH LOCK FEATURE

PART NO	A	B	C	D	H	SUITABLE CABLE	PACKAGE
FCC-15A	14.4	32.6	15.0	13.7	9.1	10 PIN	200
FCC-25A	25.0	39.6	20.0	13.0	13.3	20 PIN	
FCC-30A	39.6	55.0	35.0	13.0	12.5	30 PIN	100
FCC-40B	53.5	67.0	40.0	16.2	10.1	40 PIN	
FCC-50A	64.6	77.6	49.7	13.6	10.1	50 PIN	
FCC-50C	64.3	77.0	49.7	12.8	10.0	50 PIN	

排线固定夹 FLAT CABLE CLAMP 6-91-1

- MATERIAL: NYLON 66(UL)
- FLAME CLASS: 94V-0/94V-2
- COLOR: BLACK

ASSEMBLY:
1.INSERT ASLOPE
2.DEPRESS THE CLAMP

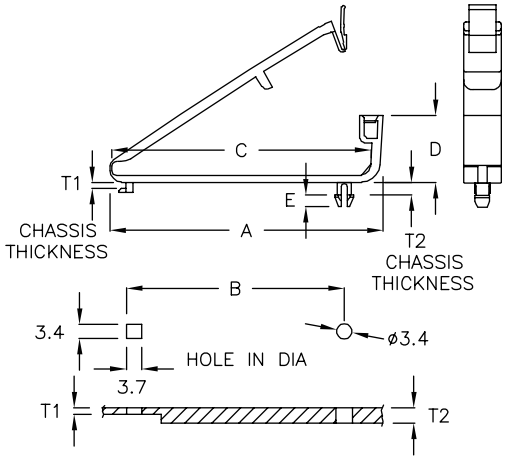

WITH LOCK FEATURE

PART NO	A	B	C	D	E	T1	T2	PACKAGE
FCG-60A	58.2	46.7	55.3	14.6	2.5	1.0	2.4	100
FCG-60C	58.2	46.7	55.3	11.9	1.8	1.0	1.0	

排线固定夹 FLAT CABLE CLAMP 6-91-2

- MATERIAL: NYLON 66(UL)
- FLAME CLASS: 94V-0/94V-2
- COLOR: NATURAL

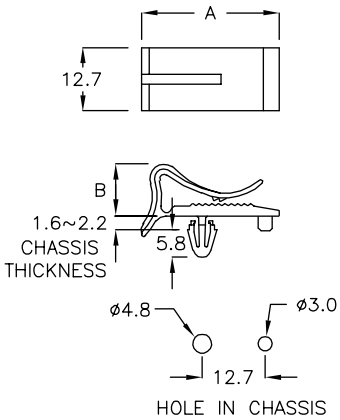

WITH LOCK FEATURE

PART NO	A	B	PACKAGE
FC-27N	27.8	10.5	500

排线固定夹 FLAT CABLE CLAMP 6-91-3

- MATERIAL: NYLON 66(UL)
- FLAME CLASS: 94V-0/94V-2
- COLOR: NATURAL
- ASSEMBLY:

1.INSERT ASLOPE
2.DEPRESS THE MOUNT

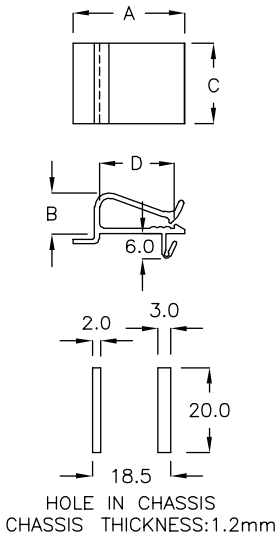

PART NO	A	B	C	D	PACKAGE
LFC-01	26.4	9.6	19.0	17.6	200

排线固定夹 FLAT CABLE CLIP 6-92-1

- MATERIAL: NYLON 66(UL)
- FLAME CLASS: 94V-0/94V-2
- COLOR: NATURAL

WITH LOCK FEATURE

PART NO	A	B	PACKAGE
FC-45N	45.0	10.9	200

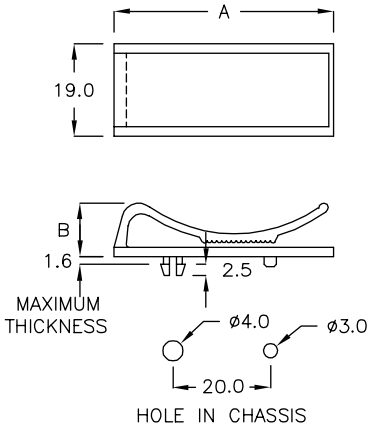

电线固定扣 WIRE CLIP 6-92-2

- MATERIAL: NYLON 66(UL)
- FLAME CLASS: 94V-0/94V-2
- COLOR: NATURAL

WITH LOCK FEATURE

PART NO	A CLOSE DIA	B	PACKAGE
PC-08T	ø7.8	24.4	500
PC-10T	ø10.0	29.3	

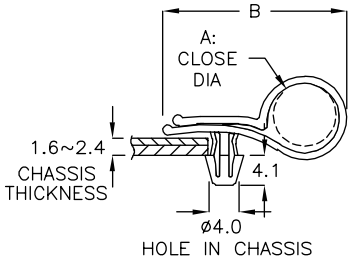

电线固定扣 WIRE CLIP 6-92-3

- MATERIAL: NYLON 66(UL)
- FLAME CLASS: 94V-0/94V-2
- COLOR: NATURAL

PART NO	A	B	C	PACKAGE
TA-5	4.2	2.5	4.7	1000

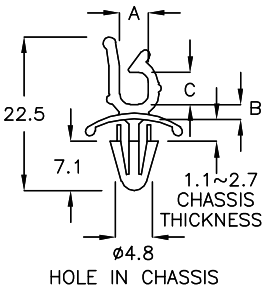

电线固定扣 WIRE CLIP 6-92-4

- MATERIAL: NYLON 66(UL)
- FLAME CLASS: 94V-0/94V-2
- COLOR: NATURAL

WITH LOCK FEATURE

PART NO	A CLOSE DIA	B	D HOLE IN CHASSIS	E	T MAXIMUM THICKNESS	PACKAGE
TA-3C	ø3.8	15.5	ø6.5	5.7	1.6	1000

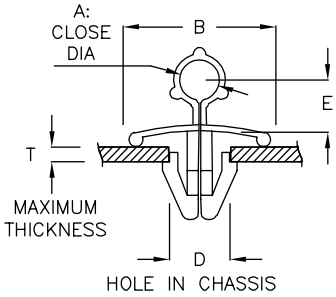

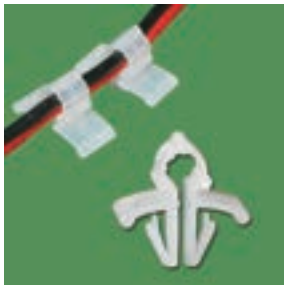

电线固定扣 WIRE CLIP 6-93-1

- MATERIAL: NYLON 66(UL)
- FLAME CLASS: 94V-0/94V-2
- COLOR: NATURAL

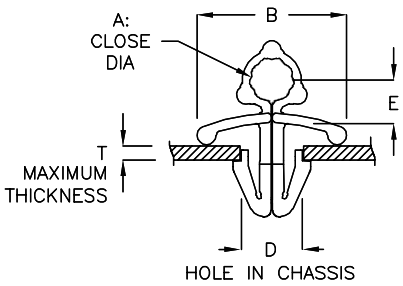

WITH LOCK FEATURE

PART NO	A CLOSE DIA	B	D HOLE IN CHASSIS	E	T CHASSIS THICKNESS	PACKAGE
TA-2K	ø2.9	12.0	ø4.5	3.5	0.6~1.6	1000

电线固定扣 WIRE CLIP 6-93-2

- MATERIAL: NYLON 66(UL)
- FLAME CLASS: 94V-0/94V-2
- COLOR: NATURAL

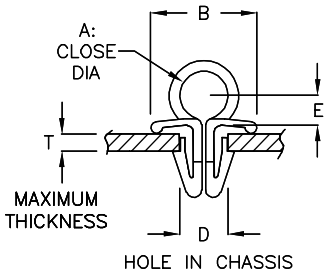

WITH LOCK FEATURE

PART NO	A CLOSE DIA	B	D HOLE IN CHASSIS	E	T MAXIMUM THICKNESS	PACKAGE
TA-3M	ø3.8	14.8	ø6.5	5.7	1.2	1000
TA-5M	ø5.0	11.7	ø6.5	4.3	2.0	
TA-6	ø5.5	12.5	ø5.5	5.0	2.0	
TA-7	ø7.5	14.1	ø5.5	4.6	2.0	
TA-8	ø8.4	16.5	ø6.0	6.2	1.6	
TA-08A	ø8.4	13.5	ø5.5	6.2	1.6	
TA-11	ø11.1	16.2	ø6.0	7.0	1.9	

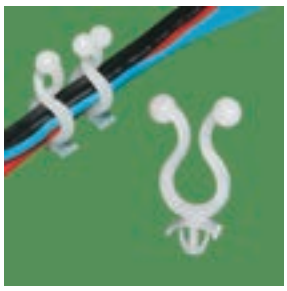

隔离束线座 WIRE CLIP 6-93-3

- MATERIAL: NYLON 66(UL)
- FLAME CLASS: 94V-0/94V-2
- COLOR: NATURAL

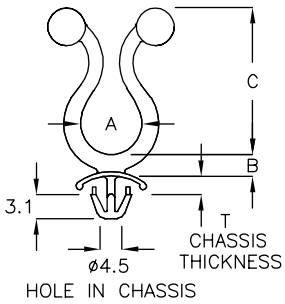

WITH LOCK FEATURE

PART NO	A	B	C	CLOSE A	T CHASSIS THICKNESS	PACKAGE
TF8-3DC	8.1	3.5	19.2	ø6.5	0.8~1.2	1000

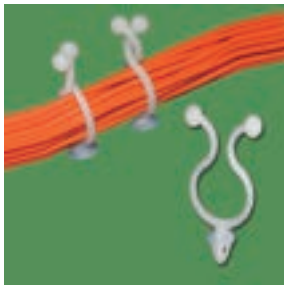

隔离束线座 WIRE CLIP 6-94-1

- MATERIAL: NYLON 66(UL)
- FLAME CLASS: 94V-0/94V-2
- COLOR: NATURAL

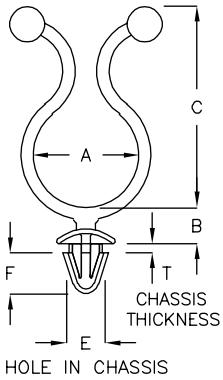

WITH LOCK FEATURE

PART NO	A	B	C	CLOSE A	T CHASSIS THICKNESS	E HOLE IN CHASSIS	F	PACKAGE
TN16-5	16.2	5.4	30.5	ø14.0	1.4~1.7	ø5.0	6.3	500

隔离束线座 WIRE CLIP 6-94-2

- MATERIAL: NYLON 66(UL)
- FLAME CLASS: 94V-0/94V-2
- COLOR: NATURAL

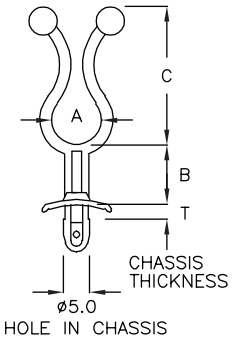

WITH LOCK FEATURE

PART NO	A	B	C	CLOSE A	T CHASSIS THICKNESS	PACKAGE
TA10-4	10.5	4.0	28.0	ø9.3	1.9~2.9	500
TA10-20	10.5	20.0	27.6	ø9.4	1.8~2.8	
TA16-3	15.9	3.5	32.0	ø14.4	1.0~2.6	
TA16-18	16.0	18.0	32.0	ø14.4	1.2~2.4	

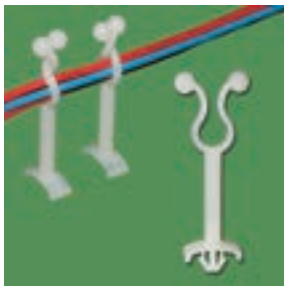

隔离束线座 WIRE CLIP 6-94-3

- MATERIAL: NYLON 66(UL)
- FLAME CLASS: 94V-0/94V-2
- COLOR: NATURAL

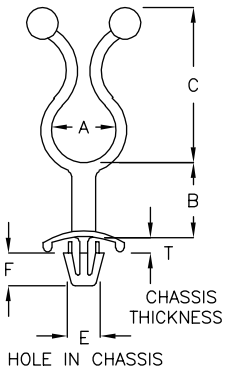

WITH LOCK FEATURE

PART NO	A	B	C	CLOSE A	T CHASSIS THICKNESS	E HOLE IN CHASSIS	F	PACKAGE
TA7-23	6.7	23.7	17.2	ø5.5	0.5~2.0	ø5.0	3.2	500
TA8-15A	8.6	15.0	26.3	ø7.5	1.2~3.0	ø4.0	5.2	
TA9-15	10.7	15.0	26.3	ø9.4	1.2~3.0	ø4.0	5.2	
TA11-4A	10.8	4.6	26.3	ø9.3	0.3~2.2	ø5.0	5.6	
TA11-50A	11.5	50.2	26.7	ø10.1	0.8~2.7	ø4.8~ø5.0	5.1	
TA14-2C	14.8	2.4	30.5	ø13.0	0.8~1.6	ø4.8	5.1	

返回图片索引

隔离束线座 WIRE CLIP 6-95-1

- MATERIAL: NYLON 66(UL)
- FLAME CLASS: 94V-0/94V-2
- COLOR: NATURAL

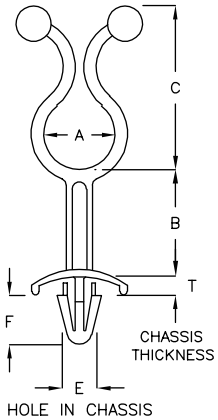

WITH LOCK FEATURE

E154548

PART NO	A	B	C	CLOSE A	T CHASSIS THICKNESS	E HOLE IN CHASSIS	F	UL	PACKAGE
TA5-60	5.1	60.4	20.7	ø4.4	0.8~2.7	ø4.8~ø5.0	7.2		500
TA8-3	8.6	3.5	19.0	ø7.0	1.2~1.8	ø4.0	3.0	UL	1000
TA8-3L	8.6	3.2	19.0	ø7.0	1.2~2.3	ø4.0	3.3		
TA8-6	8.8	5.6	19.1	ø7.0	1.2~1.8	ø4.8~ø5.0	7.6	UL	
TA8-10	8.0	10.5	22.7	ø6.8	1.2~2.8	ø5.0	7.2	UL	500
TA8-20	8.0	20.2	22.7	ø6.8	1.2~2.8	ø5.0	7.2	UL	
TA10-3	10.9	3.0	27.0	ø9.5	1.1~2.6	ø5.0	7.3	UL	
TA10-3A	10.9	3.1	27.0	ø9.5	1.2~3.8	ø5.0	6.6		
TA10-15	11.0	15.5	27.0	ø9.7	1.1~2.6	ø5.0	7.1	UL	
TA10-35	10.9	35.0	27.0	ø9.6	1.5~3.0	ø5.0	7.2	UL	
TA11-4	11.0	4.4	26.4	ø9.5	0.6~2.4	ø5.0	7.5	UL	
TA11-5	11.5	4.7	28.0	ø10.3	0.8~2.0	ø4.0	5.5		
TA11-50	11.5	50.2	26.7	ø10.1	0.8~2.7	ø4.8~ø5.0	7.1	UL	
TA11-21	11.8	21.2	27.5	ø10.2	0.6~2.7	ø5.0	6.6	UL	
TA11-43	11.5	43.5	26.7	ø10.1	0.8~2.7	ø4.8~ø5.0	7.0		
TA12-10	12.0	10.1	27.0	ø10.2	1.2~3.2	ø4.8~ø5.0	6.6		
TA14-2	14.4	2.4	30.5	ø13.0	0.3~1.8	ø4.8	7.6		
TA16-4	16.0	3.5	30.8	ø14.0	1.3~2.9	ø5.0	7.2	UL	
TA16-60	16.0	60.4	32.0	ø14.5	0.8~2.7	ø4.8~ø5.0	7.1	UL	200
TA19-30	18.7	30.0	36.4	ø16.5	0.9~3.0	ø4.8~ø5.0	7.0		
TA20-8	20.6	8.1	36.7	ø18.4	0.8~3.0	ø4.8~ø5.0	7.1		500
TA20-16	20.3	16.2	36.3	ø18.3	1.5~3.1	ø5.0	7.2	UL	
TA24-3	24.3	3.0	43.6	ø22.0	0.6~2.7	ø5.0	6.9	UL	
TA37-3	37.5	3.3	59.3	ø35.0	1.1~2.4	ø4.8~ø5.0	6.7	UL	200

隔离束线座 WIRE CLIP 6-96-1

- MATERIAL: NYLON 66(UL)
- FLAME CLASS: 94V-0/94V-2
- COLOR: NATURAL

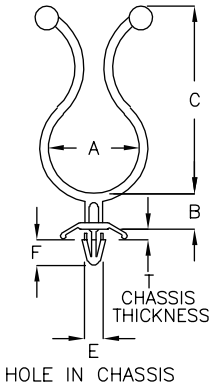

WITH LOCK FEATURE

PART NO	A	B	C	CLOSE A	T CHASSIS THICKNESS	E HOLE IN CHASSIS	F	PACKAGE
TB20-8	20.6	8.1	42.0	ø18.5	1.0~2.0	ø3.5	6.0	500
TB8-8	9.5	8.0	23.3	ø7.7	0.8~2.4	ø3.0	3.7	

隔离束线座 WIRE SADDLE 6-96-2

- MATERIAL: NYLON 66(UL)
- FLAME CLASS: 94V-0/94V-2
- COLOR: NATURAL

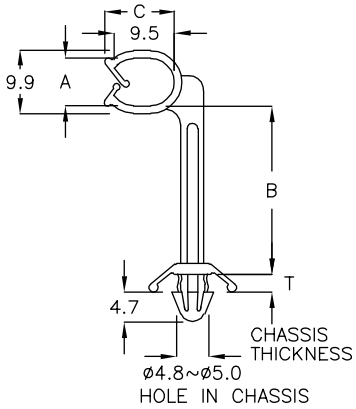

PART NO	A	B	C	T CHASSIS THICKNESS	PACKAGE
TUA-34	7.5	34.2	11.0	0.5~2.1	500

隔离束线座 WIRE SADDLE 6-96-3

- MATERIAL: NYLON 66(UL)
- FLAME CLASS: 94V-0/94V-2
- COLOR: NATURAL

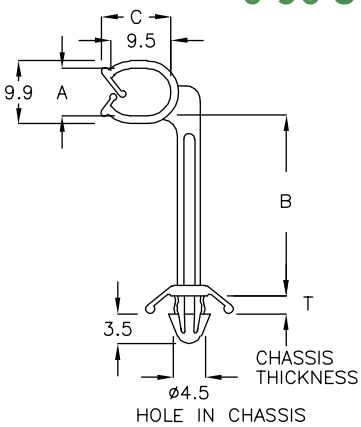

PART NO	A	B	C	T CHASSIS THICKNESS	PACKAGE
TUA-40	7.5	34.0	11.0	0.8~1.6	500

隔离束线座 WIRE CLIP 6-96-4

- MATERIAL: NYLON 66(UL)
- FLAME CLASS: 94V-0/94V-2
- COLOR: NATURAL

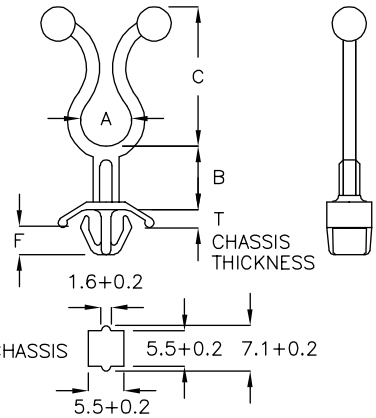

Built-In Anti-Spin Function
WITH LOCK FEATURE

PART NO	A	B	C	CLOSE A	T CHASSIS THICKNESS	F	PACKAGE
TD5-36	5.4	36.5	18.4	ø4.5	0.8~1.2	3.8	500
TD8-3	8.0	3.2	21.7	ø6.7	0.8~1.4	5.3	1000
TD12-3	11.8	3.3	29.0	ø10.6	0.8~1.4	5.3	
TD11-20A	11.5	19.9	28.2	ø10.0	0.8~2.2	3.6	500

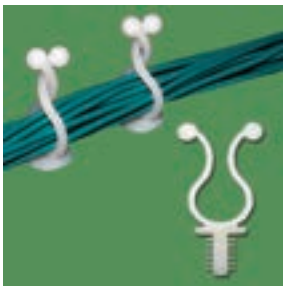

隔离束线座 WIRE CLIP 6-97-1

- MATERIAL: NYLON 66(UL)
- FLAME CLASS: 94V-0/94V-2
- COLOR: NATURAL

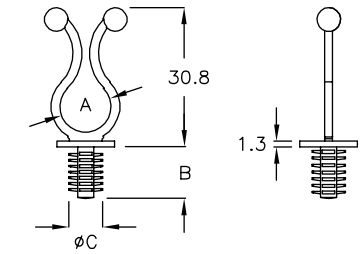

HOLE IN CHASSIS
CHASSIS THICKNESS: >5.0mm

WITH LOCK FEATURE

PART NO	A	B	C	CLOSE A	PACKAGE
TG12-03	11.8	11.5	6.35	ø10.5	500

隔离束线座 WIRE CLIP 6-97-2

- MATERIAL: NYLON 66(UL)
- FLAME CLASS: 94V-0/94V-2
- COLOR: NATURAL

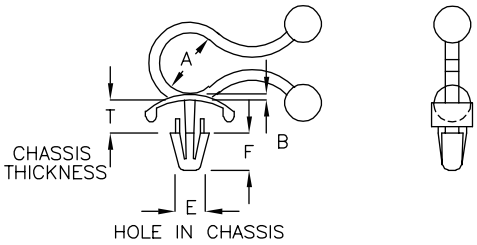

WITH LOCK FEATURE

PART NO	A	B	CLOSE A	T CHASSIS THICKNESS	E	F	PACKAGE
TDY8-1	8.2	1.0	ø7.0	2.7~3.9	ø4.0	5.1	1000
TDY8-1A	8.3	1.0	ø7.1	0.8~2.1	ø3.0	3.7	
TDY8-1C	8.2	1.0	ø7.1	0.8~2.3	ø4.5	4.9	

隔离束线座 WIRE CLIP 6-97-3

- MATERIAL: NYLON 66(UL)
- FLAME CLASS: 94V-0/94V-2
- COLOR: NATURAL

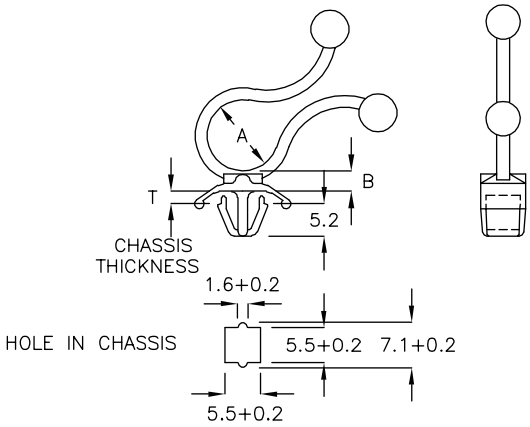

Built-In Anti-Spin Function
WITH LOCK FEATURE

PART NO	A	B	CLOSE A	T CHASSIS THICKNESS	PACKAGE
TDY11-3	11.0	3.2	ø9.6	0.8~1.2	500

隔离束线座 WIRE CLIP 6-97-4

- MATERIAL: NYLON 66(UL)
- FLAME CLASS: 94V-0/94V-2
- COLOR: NATURAL

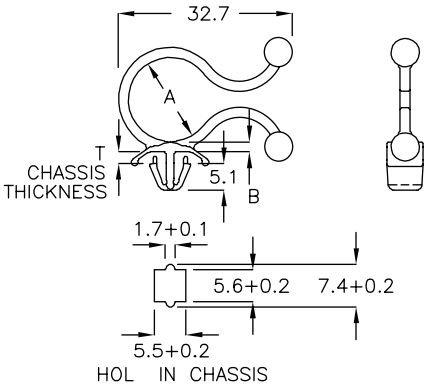

Built-In Anti-Spin Function
WITH LOCK FEATURE

PART NO	A	B	CLOSE A	T CHASSIS THICKNESS	PACKAGE
TDR16-1K	16.2	1.9	ø14.5	1.2~1.5	500

隔离束线座 WIRE SADDLE 6-98-1

- MATERIAL: NYLON 66(UL)
- FLAME CLASS: 94V-0/94V-2
- COLOR: NATURAL

E154548

WITH LOCK FEATURE

PART NO	A	B	C	CLOSE DIA	T CHASSIS THICKNESS	PACKAGE
TK6-34	6.1	34.0	20.2	ø5.1	0.5~2.3	500

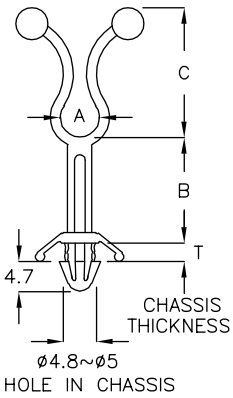

隔离束线座 WIRE CLIP 6-98-2

- MATERIAL: NYLON 66(UL)
- FLAME CLASS: 94V-0/94V-2
- COLOR: NATURAL

Insert With 90 Degree Angle
And Press Down
WITH LOCK FEATURE

PART NO	A	B	CLOSE DIA	T CHASSIS THICKNESS	PACKAGE
TEY4-1	4.5	0.25	ø3.7	2.7~3.7	1000

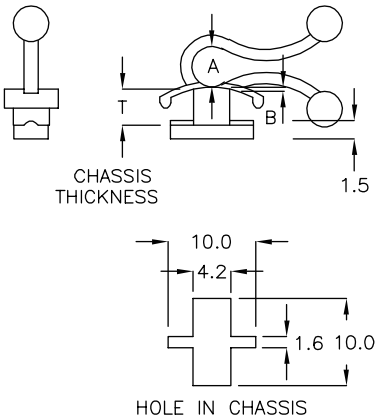

隔离束线座 WIRE CLIP 6-98-3

- MATERIAL: NYLON 66(UL)
- FLAME CLASS: 94V-0/94V-2
- COLOR: NATURAL

WITH LOCK FEATURE

PART NO	A	B	C	MAX BUNDLE DIA	T CHASSIS THICKNESS	PACKAGE
TE21-04	20.5	4.0	37.2	ø14.5	1.0~3.1	500
TE21-32	20.5	32.1	37.2	ø14.5	1.0~3.1	
TE21-40	20.5	40.1	37.2	ø14.5	1.0~3.1	

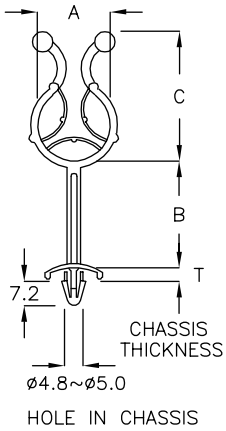

隔离束线座 WIRE SADDLE 6-99-1

- MATERIAL: NYLON 66(UL)
- FLAME CLASS: 94V-0/94V-2
- COLOR: NATURAL

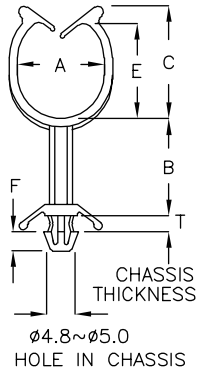

PART NO	A	B	C	E	T CHASSIS THICKNESS	F	PACKAGE
TU14-7	14.5	7.0	19.5	16.2	0.5~2.0	3.4	500
TU14-12	14.8	12.0	19.5	16.7	0.5~2.3	2.8	
TU14-17	14.8	16.8	19.5	16.2	0.5~2.3	3.5	
TU14-25	14.8	25.0	19.5	16.2	0.5~2.3	3.5	
TU14-27	14.8	26.8	19.5	16.2	0.5~2.3	3.6	
TU14-37	14.8	36.8	19.5	16.2	0.5~2.3	3.5	

隔离束线座 WIRE SADDLE 6-99-2

- MATERIAL: NYLON 66(UL)
- FLAME CLASS: 94V-0/94V-2
- COLOR: NATURAL

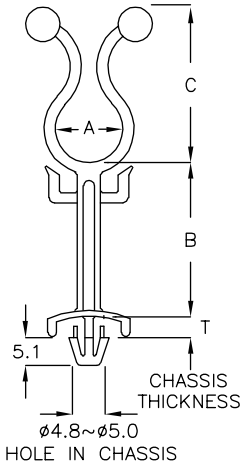

WITH LOCK FEATURE

PART NO	A	B	C	CLOSE DIA	T CHASSIS THICKNESS	PACKAGE
TX11-52	11.8	52.5	26.6	ø10.2	0.3~2.5	500

隔离束线座 WIRE SADDLE 6-99-3

- MATERIAL: NYLON 66(UL)
- FLAME CLASS: 94V-0/94V-2
- COLOR: NATURAL

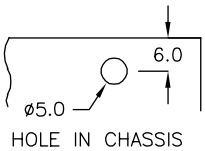

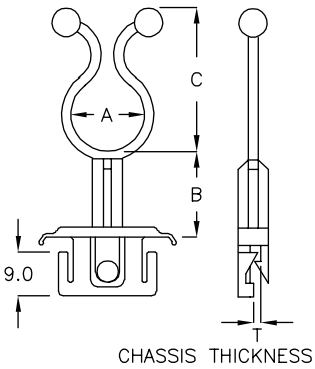

WITH LOCK FEATURE

PART NO	A	B	C	T CHASSIS THICKNESS	CLOSE DIA	PACKAGE
TT15-10	14.9	10.0	29.2	1.6~2.0	ø13.3	500
TT15-10A	14.9	10.0	29.2	2.1~2.5		
TT15-17	14.9	17.4	29.2	1.6~2.0		

隔离束线座 WIRE SADDLE 6-99-4

- MATERIAL: NYLON 66(UL)
- FLAME CLASS: 94V-0/94V-2
- COLOR: NATURAL

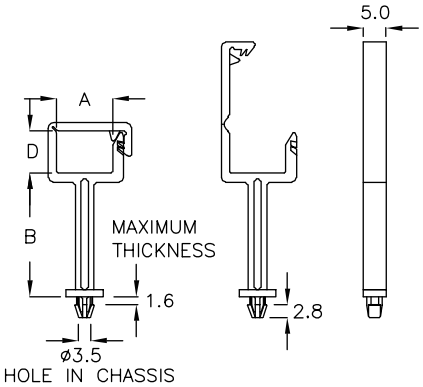

WITH LOCK FEATURE

PART NO	A	B	D	PACKAGE
CHB-26A	12.1	26.7	9.1	500

隔离束线座 WIRE SADDLE 6-100-1

- MATERIAL: NYLON 66(UL)
- FLAME CLASS: 94V-0/94V-2
- COLOR: NATURAL

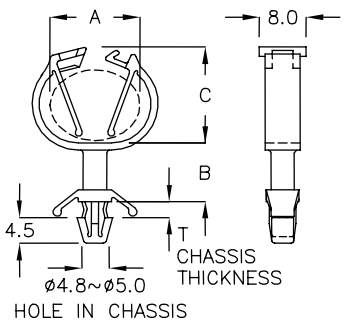

WITH LOCK FEATURE

PART NO	A SUITABLE BUNDLE DIA	B	C	T CHASSIS THICKNESS	PACKAGE
TUT-10	ø9.0~ø12.5	10.0	15.6	0.5~2.3	500

隔离束线座 WIRE SADDLE 6-100-2

- MATERIAL: NYLON 66(UL)
- FLAME CLASS: 94V-0/94V-2
- COLOR: NATURAL

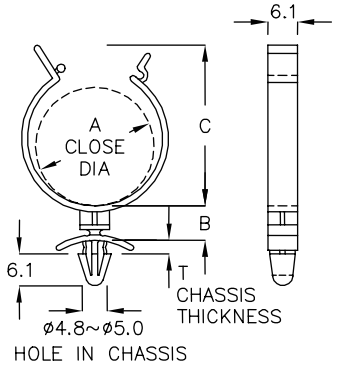

WITH LOCK FEATURE

PART NO	A CLOSE DIA	B	C	T CHASSIS THICKNESS	PACKAGE
TC20-6	ø20.5	6.55	29.7	0.8~2.0	200

电线固定座 WIRE MOUNT 6-100-3

- MATERIAL: NYLON 66(UL)
- FLAME CLASS: 94V-0/94V-2
- COLOR: BLACK

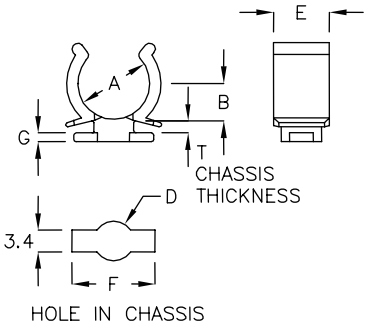

Insert With 90 Degree Angle
And Press Down

PART NO	A	B	D HOLE IN CHASSIS	E	F	G	T CHASSIS THICKNESS	PACKAGE
CHQ-03	ø3.1	3.2	ø4.2	5.6	10.1	1.3	1.2	2000
CHQ-07	ø7.3	4.2	ø5.2	7.0	10.4	1.3	1.2	
CHQ-08	ø7.9	4.3	ø5.2	7.0	10.4	1.3	1.2	1000
CHQ-9	ø8.5	4.7	ø5.2	7.0	10.4	1.05	1.2	
CHQ-11	ø10.7	5.3	ø5.2	7.0	10.4	1.3	1.3	

隔离束线座 WIRE SADDLE 6-100-4

- MATERIAL: NYLON 66(UL)
- FLAME CLASS: 94V-0/94V-2
- COLOR: NATURAL

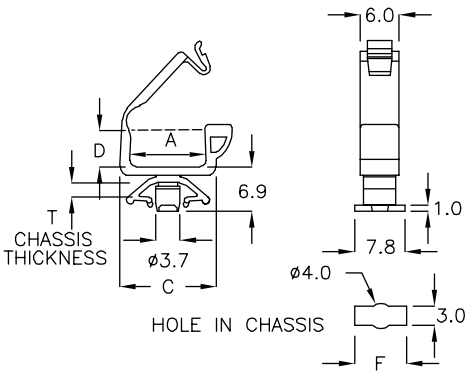

INSERT WITH 90 DEGREE ANGLE
AND PRESS DOWN
WITH LOCK FEATURE

PART NO	A	C	D	E	T CHASSIS THICKNESS	PACKAGE
CKB-7A	11.0	15.0	7.0	8.2	1.6	500
CKB-10A	16.0	19.8	10.0	8.0	0.8	

隔离束线座 WIRE SADDLE 6-101-1

- MATERIAL: NYLON 66(UL)
- FLAME CLASS: 94V-0/94V-2
- COLOR: NATURAL

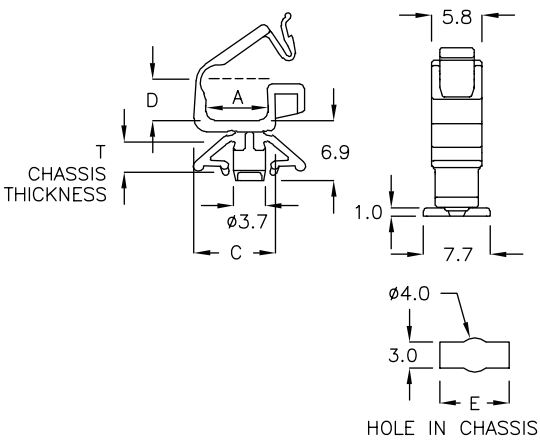

INSERT WITH 90 DEGREE ANGLE
AND PRESS DOWN
WITH LOCK FEATURE

PART NO	A	C	D	E	T CHASSIS THICKNESS	PACKAGE
CKB-4JH	7.2	9.4	4.8	8.0	1.0~1.6	1000

隔离束线座 WIRE SADDLE 6-101-2

- MATERIAL: NYLON 66(UL)
- FLAME CLASS: 94V-0/94V-2
- COLOR: NATURAL

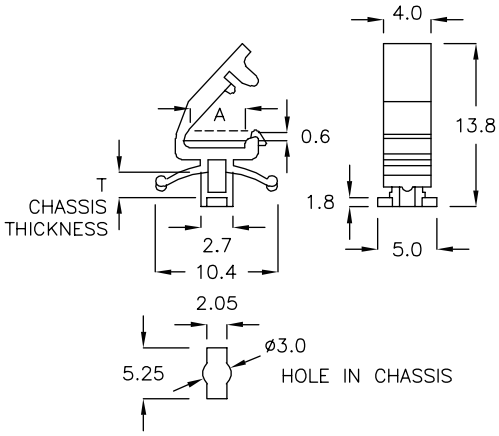

INSERT WITH 90 DEGREE ANGLE
AND PRESS DOWN
WITH LOCK FEATURE

PART NO	A	T CHASSIS THICKNESS	PACKAGE
CKA-2A	4.0	1.0	2000

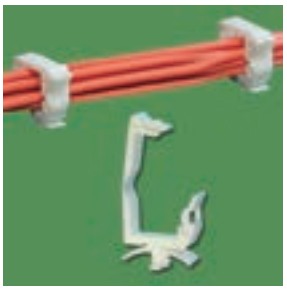

隔离束线座 WIRE SADDLE 6-101-3

- MATERIAL: NYLON 66(UL)
- FLAME CLASS: 94V-0/94V-2
- COLOR: NATURAL

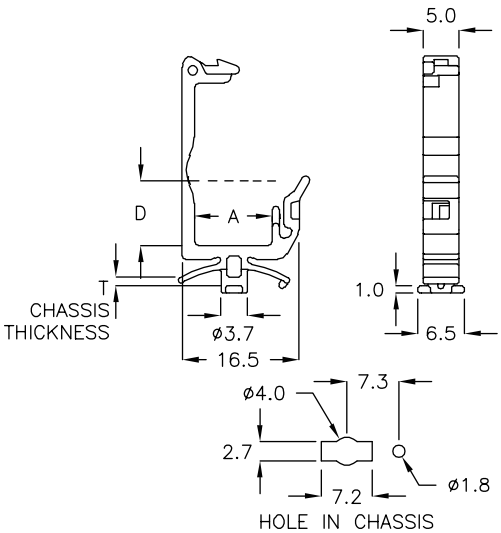

INSERT WITH 90 DEGREE ANGLE
AND PRESS DOWN
WITH LOCK FEATURE

PART NO	A	D	T CHASSIS THICKNESS	PACKAGE
CKN-11Y	10.9	9.2	0.8~1.6	500

电线固定座 WIRE MOUNT 6-102-1

- MATERIAL: NYLON 66(UL)
- FLAME CLASS: 94V-0/94V-2
- COLOR: NATURAL

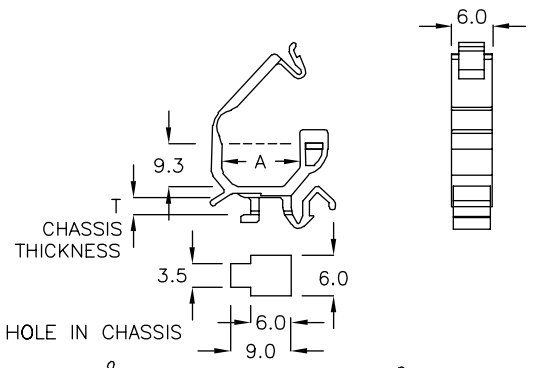

WITH LOCK FEATURE

PART NO	A	T CHASSIS THICKNESS	PACKAGE
CKX-11A	11.8	1.2~1.6	500

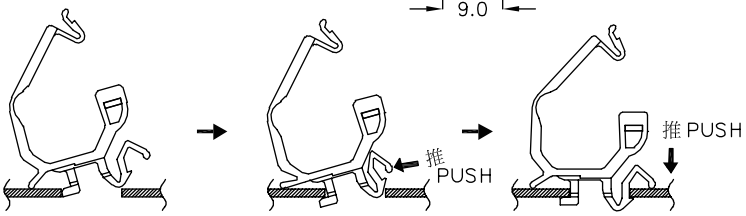

电线固定座 WIRE MOUNT 6-102-2

- MATERIAL: NYLON 66(UL)
- FLAME CLASS: 94V-0/94V-2
- COLOR: NATURAL

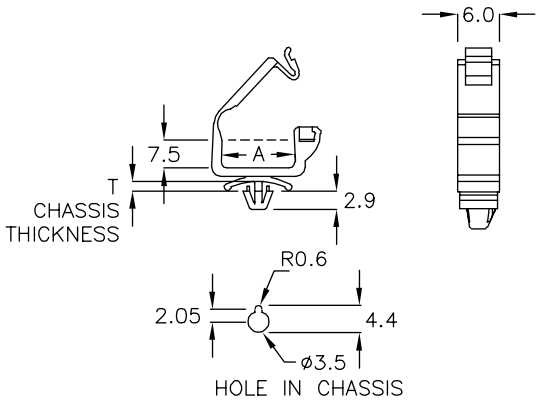

Build-In Anti-Spin Function
WITH LOCK FEATURE

PART NO	A	T CHASSIS THICKNESS	PACKAGE
CKY-11A	11.9	0.8~1.0	500

隔离束线座 WIRE SADDLE 6-102-3

- MATERIAL: NYLON 66(UL)
- FLAME CLASS: 94V-0/94V-2
- COLOR: NATURAL,BLACK

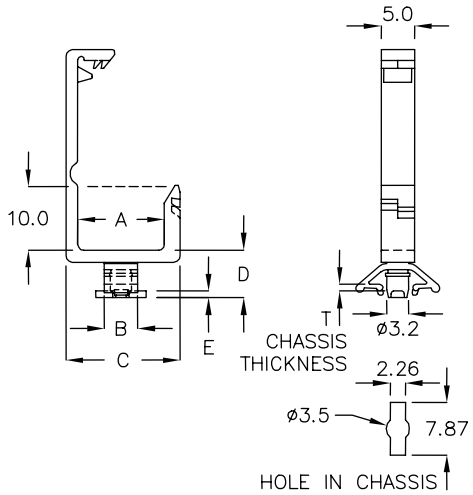

Insert With 90 Degree Angle
And Press Down
WITH LOCK FEATURE

PART NO	A	B	C	D	E	T CHASSIS THICKNESS	PACKAGE
CMG-10	13.0	5.0	17.2	7.15	1.0	0.6~1.0	500
CMG-24J	24.0	9.0	28.2	7.35	1.2	0.8~1.0	

隔离束线座 WIRE SADDLE 6-103-1

- MATERIAL: NYLON 66(UL)
- FLAME CLASS: 94V-0/94V-2
- COLOR: BLACK

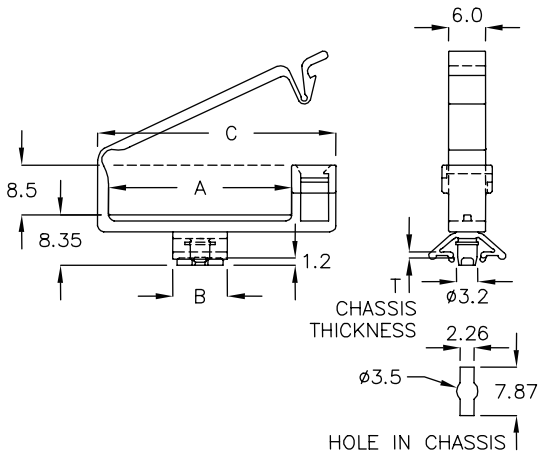

Insert With 90 Degree Angle
And Press Down
WITH LOCK FEATURE

PART NO	A	B	C	T CHASSIS THICKNESS	PACKAGE
CMGA-30	30.0	9.0	39.1	0.8~1.0	200

电线固定座 WIRE MOUNT 6-103-2

- MATERIAL: NYLON 66(UL)
- FLAME CLASS: 94V-0/94V-2
- COLOR: NATURAL

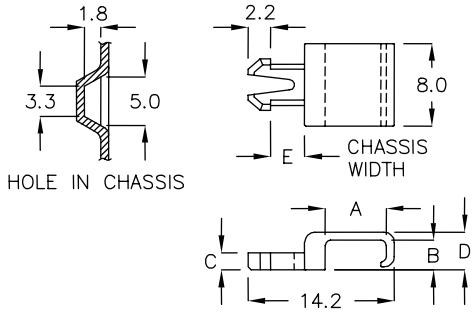

PART NO	A	B	C	D	E CHASSIS WIDTH	PACKAGE
CKT-1A	5.9	2.9	1.7	3.7	3.1	1000
CKT-1C	5.9	2.7	1.7	3.5	3.1	

电线固定座 WIRE MOUNT 6-103-3

- MATERIAL: NYLON 66(UL)
- FLAME CLASS: 94V-0/94V-2
- COLOR: NATURAL

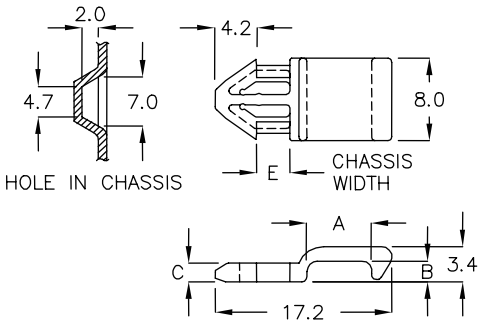

PART NO	A	B	C	E CHASSIS WIDTH	PACKAGE
CKT-03	6.3	2.0	1.8	3.0	1000

电线固定座 WIRE MOUNT 6-103-4

- MATERIAL: NYLON 66(UL)
- FLAME CLASS: 94V-0/94V-2
- COLOR: NATURAL

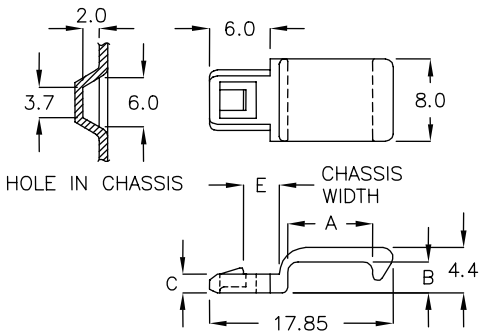

PART NO	A	B	C	E CHASSIS WIDTH	PACKAGE
CKT-04	8.3	3.0	1.8	3.0	1000

电线固定座 WIRE MOUNT 6-104-1

- MATERIAL: NYLON 66(UL)
- FLAME CLASS: 94V-0/94V-2
- COLOR: BLACK
- WITH M3 COUNTERSUNK SCREW

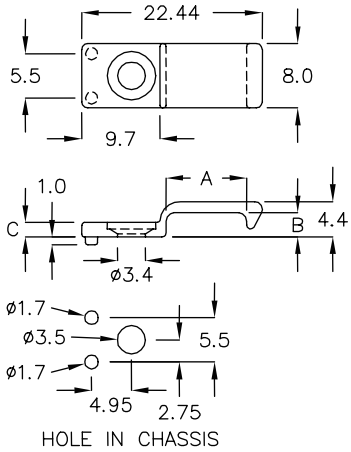

PART NO	A	B	C	PACKAGE
CKTW−10	10.0	3.0	1.8	1000

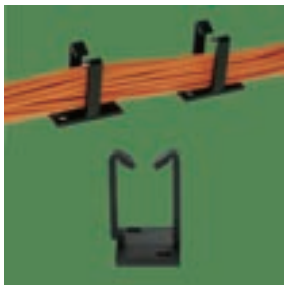

隔离束线座 WIRE SADDLE 6-104-2

- MATERIAL: NYLON 66(UL)
- FLAME CLASS: 94V-0/94V-2
- COLOR: BLACK
- WITH M4 SCREW

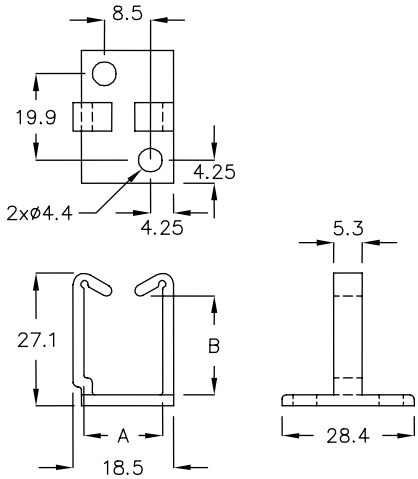

PART NO	A	B	PACKAGE
ABP−13C	14.5	20.9	200

隔离束线座 WIRE SADDLE 6-104-3

- MATERIAL: NYLON 66(UL)
- FLAME CLASS: 94V-0/94V-2
- COLOR: BLACK

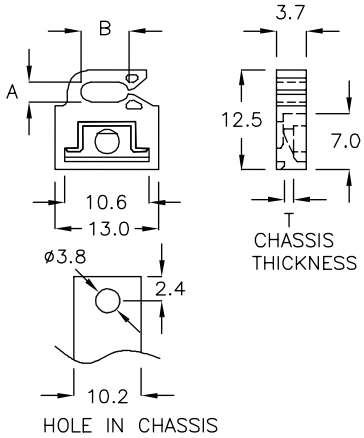

PART NO	A	B	T CHASSIS THICKNESS	PACKAGE
CTR−01	2.5	6.0	1.2~1.3	2000

隔离束线座 WIRE SADDLE 6-104-4

- MATERIAL: NYLON 66(UL)
- FLAME CLASS: 94V-0/94V-2
- COLOR: BLACK

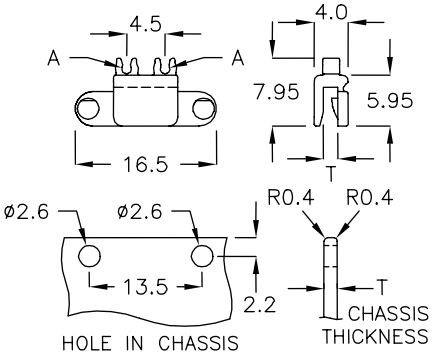

PART NO	A	T CHASSIS THICKNESS	PACKAGE
CMM−1AS	ø1.1	1.6	1000

隔离束线座 WIRE SADDLE 6-105-1

- MATERIAL: NYLON 66(UL)
- FLAME CLASS: 94V-0/94V-2
- COLOR: NATURAL

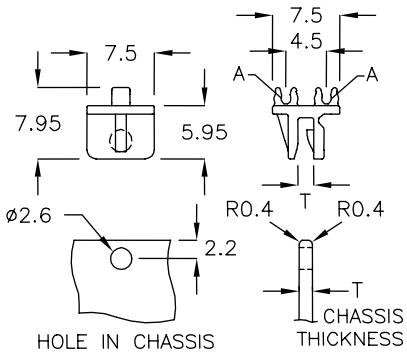

PART NO	A	T CHASSIS THICKNESS	PACKAGE
CMQ-1TJ	ø1.1	1.6	2000

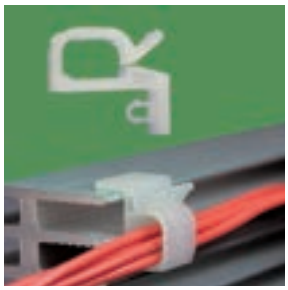

电线固定座 WIRE MOUNT 6-105-2

- MATERIAL: NYLON 66(UL)
- FLAME CLASS: 94V-0/94V-2
- COLOR: NATURAL

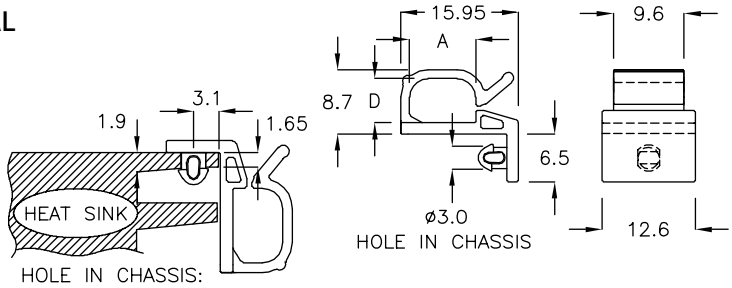

PART NO	A	D	PACKAGE
FAM-16	9.0	6.0	500

电线固定座 WIRE MOUNT 6-105-3

- MATERIAL: NYLON 66(UL)
- FLAME CLASS: 94V-0/94V-2
- COLOR: NATURAL

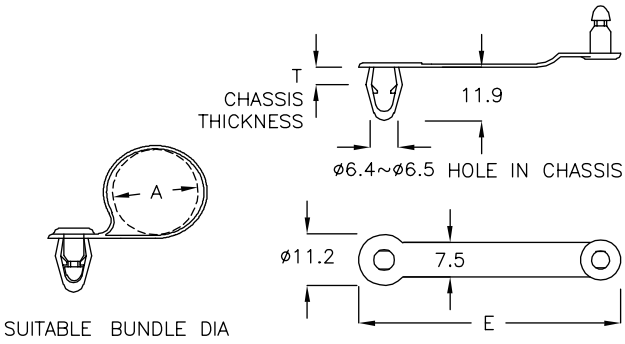

PART NO	A SUITABLE BUNDLE DIA	E	T CHASSIS THICKNESS	PACKAGE
PDT-06	ø5.0~ø6.5	47.6	0.8~2.4	500
PDT-08	ø7.0~ø8.5	53.6	0.8~2.4	
PDT-10	ø9.5~ø11.0	57.3	0.8~2.4	

电线固定座 WIRE MOUNT 6-105-4

- MATERIAL: NYLON 66(UL)
- FLAME CLASS: 94V-0/94V-2
- COLOR: NATURAL

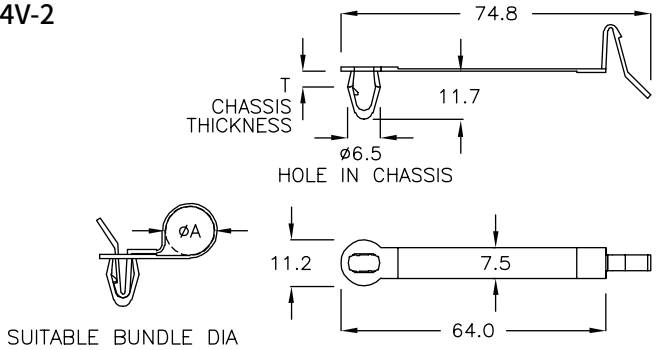

PART NO	A SUITABLE BUNDLE DIA	T CHASSIS THICKNESS	PACKAGE
PDT-1A	ø13.0	0.8~2.4	100

隔离束线座 WIRE SADDLE 6-106-1

- MATERIAL: NYLON 66(UL)
- FLAME CLASS: 94V-0/94V-2
- COLOR: BLACK

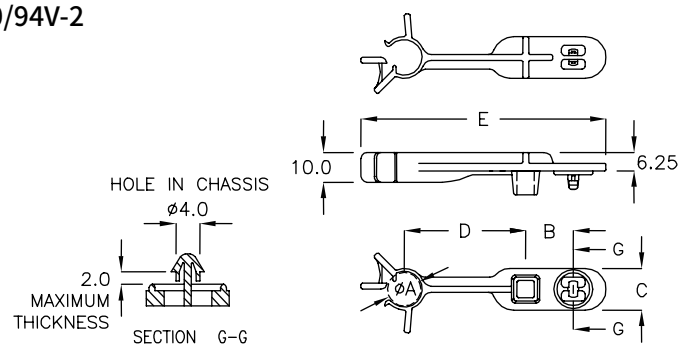

PART NO	A	B	C	D	E	PACKAGE
FLA-50	9.6	16.0	14.0	40.3	82.3	100

隔离束线座 WIRE SADDLE 6-106-2

- MATERIAL: NYLON 66(UL)
- FLAME CLASS: 94V-0/94V-2
- COLOR: BLACK

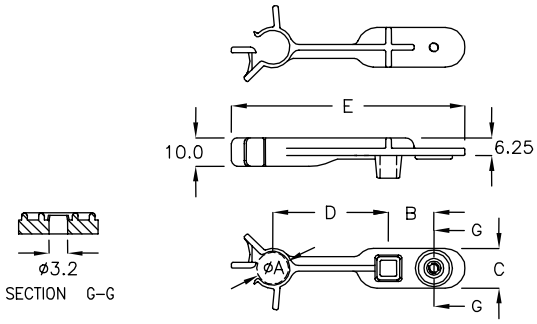

PART NO	A	B	C	D	E	PACKAGE
FLA-50A	9.6	16.0	14.0	40.3	82.3	100

电线固定夹 WIRE CLIP 6-106-3

- MATERIAL: NYLON 66(UL)
- FLAME CLASS: 94V-0/94V-2
- COLOR: NATURAL

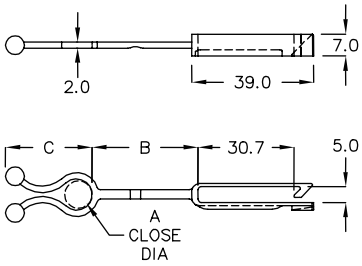

WITH LOCK FEATURE

PART NO	A CLOSE DIA	B	C	PACKAGE
CXT-10	ø8.8	33.6	27.8	100

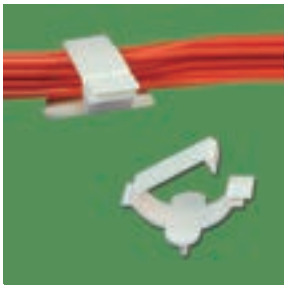

隔离束线座 WIRE MOUNT 6-106-4

- MATERIAL: NYLON 66(UL)
- FLAME CLASS: 94V-0/94V-2
- COLOR: NATURAL

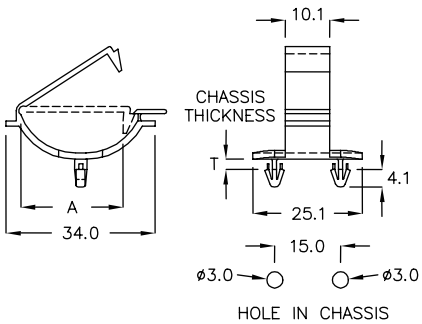

WITH LOCK FEATURE

PART NO	A	T CHASSIS THICKNESS	PACKAGE
CKK-02	22.8	1.8~2.0	500

理线座 WIRE MOUNT 6-107-1

- MATERIAL: NYLON 66(UL)
- FLAME CLASS: 94V-0/94V-2
- COLOR: BLACK

PART NO	A	PACKAGE
DFA-22C	22.5	500

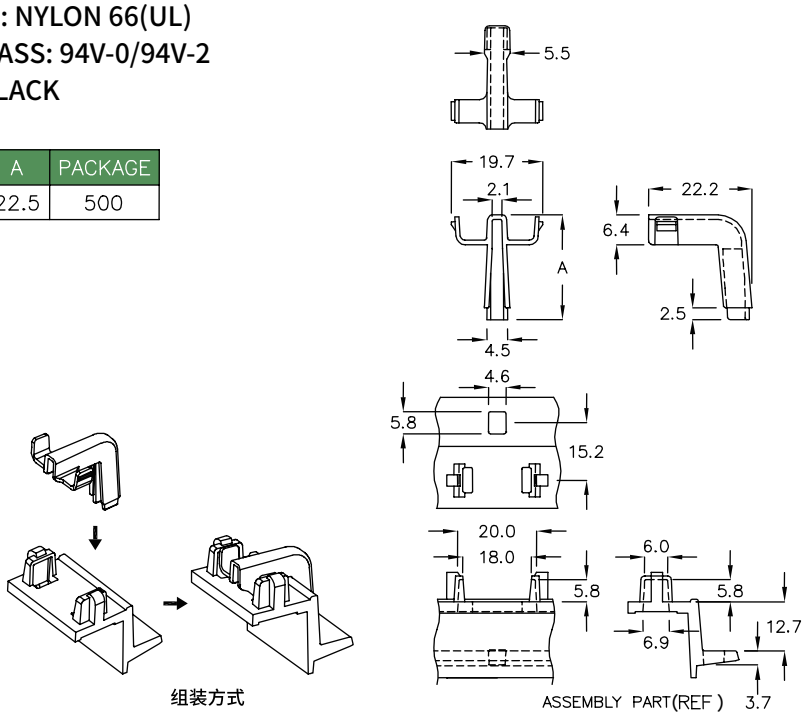

电线固定座 WIRE MOUNT 6-107-2

- MATERIAL: NYLON 66(UL)
- FLAME CLASS: 94V-0/94V-2
- COLOR: BLACK

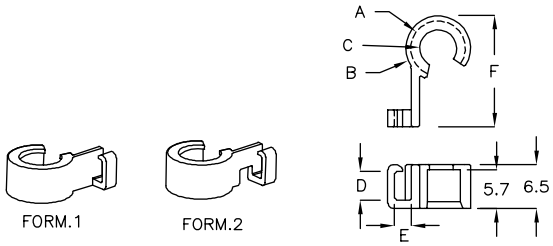

PART NO	A	B	C	D	E	F	FORM	PACKAGE
KYK-08	ø8.1	ø9.7	ø5.5	4.3	2.5	16.5	1	1000
KYK-10A	ø10.1	ø11.9	ø7.7	4.3	2.5	17.6	1	
KYK-11	ø10.1	ø11.9	ø7.7	4.3	2.5	17.6	2	
KYK-14D	ø12.1	ø14.1	ø9.7	4.3	2.5	20.7	2	

电线固定座 WIRE MOUNT 6-107-3

- MATERIAL: NYLON 66(UL)
- FLAME CLASS: 94V-0/94V-2
- COLOR: NATURAL

PART NO	A	PACKAGE
KYC-10RM	ø10.0	1000

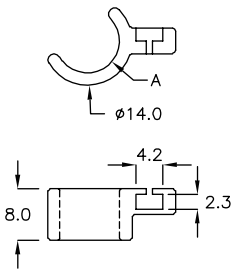

电线固定座 WIRE MOUNT 6-107-4

- MATERIAL: NYLON 66(UL)
- FLAME CLASS: 94V-0/94V-2
- COLOR: NATURAL

PART NO	A	PACKAGE
KYF-10	ø10.1	1000

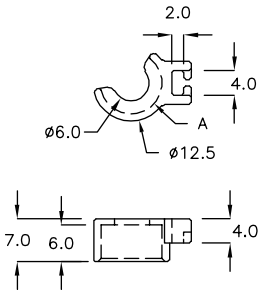

电线固定座 WIRE MOUNT 6-108-1

- MATERIAL: NYLON 66(UL)
- FLAME CLASS: 94V-0/94V-2
- COLOR: NATURAL

PART NO	A	PACKAGE
KYF-10BQ	ø10.0	1000

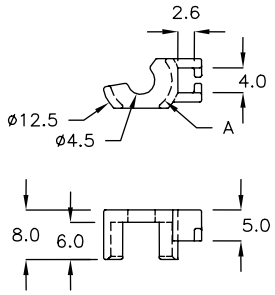

电线固定座 WIRE MOUNT 6-108-2

- MATERIAL: NYLON 66(UL)
- FLAME CLASS: 94V-0/94V-2
- COLOR: BLACK

PART NO	A	PACKAGE
KYM-10TP	ø10.4	1000

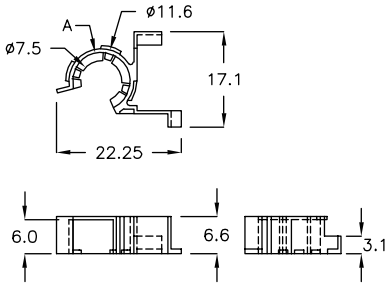

电线固定座 WIRE MOUNT 6-108-3

- MATERIAL: NYLON 66(UL)
- FLAME CLASS: 94V-0/94V-2
- COLOR: NATURAL

WITH LOCK FEATURE

PART NO	A	PACKAGE
KYR-10C	ø10.1	1000

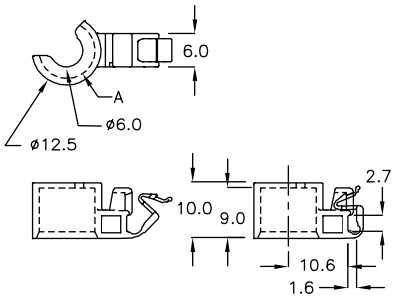

电线固定座 WIRE MOUNT 6-108-4

- MATERIAL: NYLON 66(UL)
- FLAME CLASS: 94V-0/94V-2
- COLOR: NATURAL

WITH LOCK FEATURE

PART NO	A	PACKAGE
KYR-10DA	ø10.1	1000

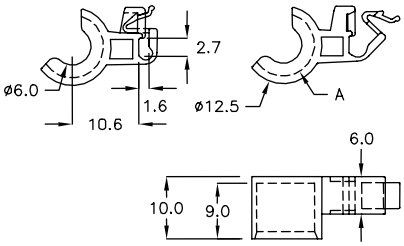

电线固定座 WIRE MOUNT 6-108-5

- MATERIAL: NYLON 66(UL)
- FLAME CLASS: 94V-0/94V-2
- COLOR: NATURAL

WITH LOCK FEATURE

PART NO	A	PACKAGE
KYT-08	ø7.9	1000

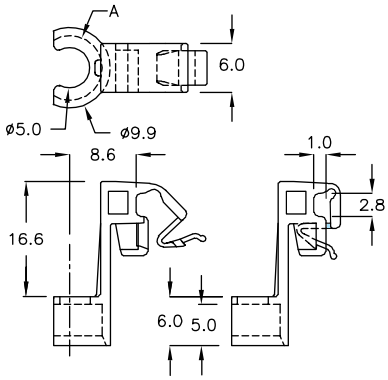

电线固定座 WIRE MOUNT 6-109-1

- MATERIAL: NYLON 66(UL)
- FLAME CLASS: 94V-0/94V-2
- COLOR: NATURAL

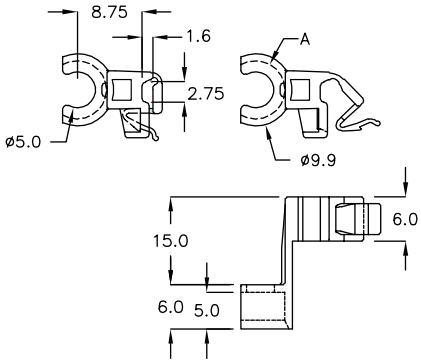

WITH LOCK FEATURE

PART NO	A	PACKAGE
KYT-8MY	ø7.9	1000

电线固定座 WIRE MOUNT 6-109-2

- MATERIAL: NYLON 66(UL)
- FLAME CLASS: 94V-0/94V-2
- COLOR: NATURAL

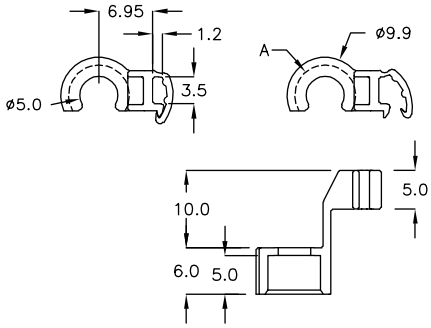

WITH LOCK FEATURE

PART NO	A	PACKAGE
KYW-8HL	ø7.9	1000

电线固定座 WIRE MOUNT 6-109-3

- MATERIAL: NYLON 66(UL)
- FLAME CLASS: 94V-0/94V-2
- COLOR: NATURAL

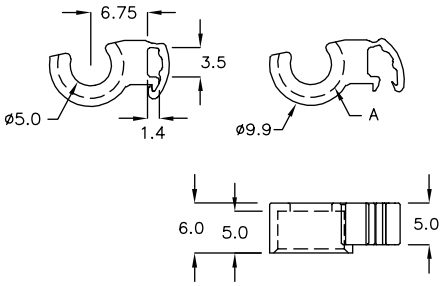

WITH LOCK FEATURE

PART NO	A	PACKAGE
KYH-08	ø7.9	1000

隔离束线座 WIRE SADDLE 6-109-4

- MATERIAL: PP(UL)
- FLAME CLASS: 94V-0
- COLOR: BLACK

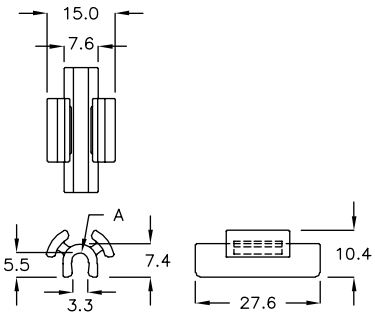

PART NO	A	PACKAGE
CIM-27A	ø3.8	1000

电线固定座 WIRE MOUNT 6-109-5

- MATERIAL: NYLON 66(UL)
- FLAME CLASS: 94V-0/94V-2
- COLOR: NATURAL

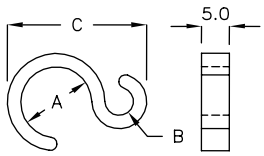

PART NO	A	B	C	PACKAGE
CHST-25	ø12.7	ø5.0	25.07	500
CHST-28	ø15.7	ø5.0	28.1	

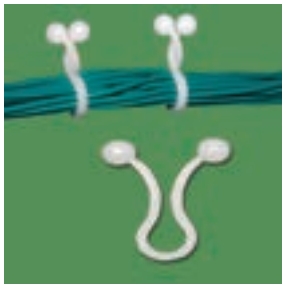

电线固定环 TWIST LOCK 6-110-1

- MATERIAL: NYLON 66(UL)
- FLAME CLASS: 94V-0/94V-2
- COLOR: NATURAL

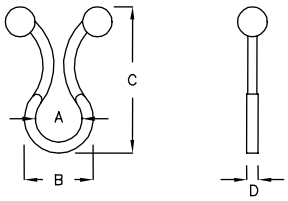

E154548(S)

WITH LOCK FEATURE

PART NO	A	B	C	D	CLOSE DIA	UL	PACKAGE
A–3DS	3.9	6.3	14.5	1.3	ø3.0		1000
A–4A	4.4	7.2	14.95	1.6	ø3.5		
A–5KA	5.3	8.7	18.05	1.65	ø4.2		
A–5	5.0	8.5	22.0	1.8	ø4.2	UL	
A–8	8.3	12.0	26.2	2.3	ø7.0	UL	
A–11	11.0	15.2	30.0	2.3	ø9.7	UL	
A–13	13.2	17.2	32.5	2.3	ø11.5		
A–14A	14.7	18.7	35.0	2.0	ø13.2		
A–15	14.7	18.8	33.0	2.0	ø13.0		
A–15A	15.0	19.0	33.7	1.8	ø14.0		500
A–18	19.2	23.3	38.5	2.0	ø16.3	UL	
A–19	18.9	22.9	35.0	2.2	ø17.3		
A–22	22.0	27.5	42.0	2.0	ø20.0	UL	
A–25	25.0	29.7	44.8	2.35	ø23.0		
A–28	28.7	33.5	55.0	2.0	ø26.6		
A–30	29.6	33.7	55.5	2.0	ø27.0		
★ A–38	38.0	44.0	63.0	2.3	ø35.0		

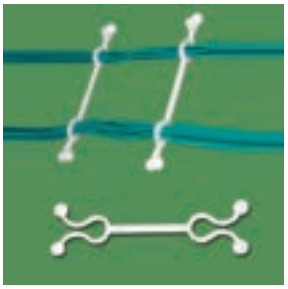

电线固定环 TWIST LOCK 6-110-2

- MATERIAL: NYLON 66(UL)
- FLAME CLASS: 94V-0/94V-2
- COLOR: NATURAL,BLACK

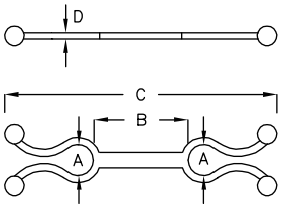

E154548

WITH LOCK FEATURE

PART NO	A	B	C	D	CLOSE DIA	UL	PACKAGE
2A–7	7.0	32.7	73.8	1.9	ø5.9	UL	500
2A–7L	7.0	60.0	101.5	2.0	ø5.8		
2A–8	8.0	10.2	56.5	1.9	ø6.5	UL	
2A–10	10.0	30.4	82.2	2.0	ø8.6		
2A–10A	10.0	30.0	82.2	3.0	ø8.6		
2A–13S	14.8	85.0	147.8	2.0	ø12.2		200

隔离束线座 WIRE SADDLE — 6-111-1

- MATERIAL: PP
- COLOR: BLACK

PART NO	A	B	PACKAGE
CHA-01	65.0	80.0	200

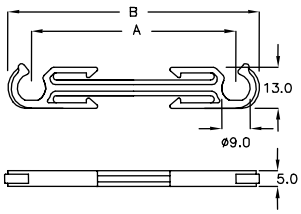

隔离束线座 WIRE MOUNT — 6-111-2

- MATERIAL: PP
- COLOR: NATURAL

PART NO	A	PACKAGE
6FW-11	22.0	100

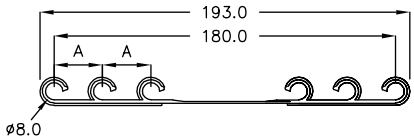

光纤固定座 FIBER HOUSING — 6-111-3

- MATERIAL: NYLON 66(UL)
- FLAME CLASS: 94V-0/94V-2
- COLOR: NATURAL

WITH LOCK FEATURE

PART NO	A	B	C SUITABLE CABLE DIA	PACKAGE
CKR-01	11.5	6.0	ø4.0 ~ ø4.2	1000

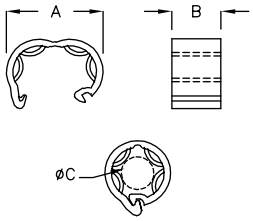

光纤固定座 FIBER HOUSING — 6-111-4

- MATERIAL: NYLON 66(UL)
- FLAME CLASS: 994V-0/94V-2
- COLOR: NATURAL

WITH LOCK FEATURE

PART NO	A	B	C SUITABLE CABLE DIA	PACKAGE
CKR-02	15.0	5.3	ø5.3 ~ ø5.5	1000
CKR-3A	16.1	5.3	ø5.8 ~ ø6.0	

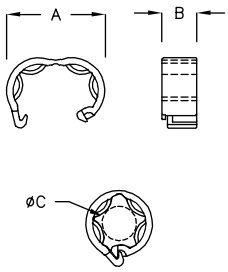

光纤固定座 FIBER HOUSING — 6-111-5

- MATERIAL: NYLON 66(UL)
- FLAME CLASS: 94V-0/94V-2
- COLOR: NATURAL

WITH LOCK FEATURE

PART NO	A	B	C SUITABLE CABLE DIA	PACKAGE
CKR-1P	10.5	5.3	ø1.5~ø1.7	1000

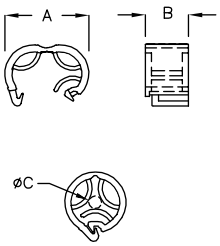

电线固定座 TIE MOUNT 6-112-1

- MATERIAL: NYLON 66(UL)
- FLAME CLASS: 94V-0/94V-2
- COLOR: NATURAL

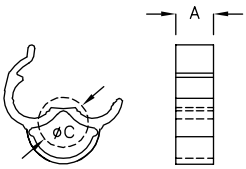

WITH LOCK FEATURE

PART NO	A	C SUITABLE CABLE DIA	PACKAGE
CHH-01	8.0	ø8.6 ~ ø8.8	500
CHH-02	6.5	ø5.0 ~ ø5.2	1000
CHH-03	6.5	ø6.0 ~ ø6.2	
CHH-04	8.0	ø7.0 ~ ø7.2	500

线夹 TUBE BINDER 6-112-2

- MATERIAL: NYLON 66(UL)
- FLAME CLASS: 94V-0/94V-2
- COLOR: BLACK

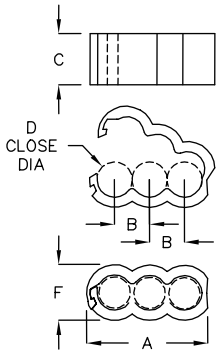

WITH LOCK FEATURE

PART NO	A	B	C	D CLOSE DIA	F	PACKAGE
FCM-20	14.2	4.1	6.0	ø4.0	6.9	1000
FCM-20C	8.9	2.3	5.0	ø2.0	4.0	

线夹 TUBE BINDER 6-112-3

- MATERIAL: NYLON 66(UL)
- FLAME CLASS: 94V-0/94V-2
- COLOR: BLACK

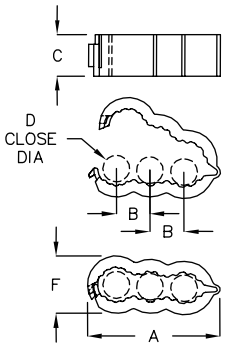

WITH LOCK FEATURE

PART NO	A	B	C	D CLOSE DIA	F	PACKAGE
FQC-17B	19.1	7.15	6.0	ø4.6	8.5	1000
FQC-22D	25.8	7.15	6.0	ø6.7	11.2	

线夹 TUBE BINDER 6-112-4

- MATERIAL: NYLON 66(UL)
- FLAME CLASS: 94V-0/94V-2
- COLOR: BLACK

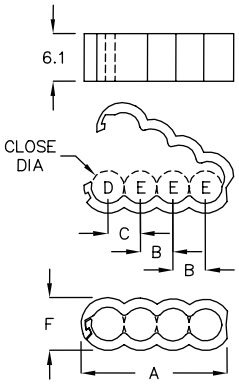

WITH LOCK FEATURE

PART NO	A	B	C	D CLOSE DIA	E CLOSE DIA	F	PACKAGE
FCM-20A	18.4	4.1	4.1	ø4.2	ø4.2	7.1	1000
FCM-20F	22.9	5.1	5.1	ø5.2	ø5.2	8.3	
FCM-20H	26.5	6.2	5.55	ø4.9	ø6.2	9.2	

线夹 TUBE BINDER 6-113-1

- MATERIAL: NYLON 66(UL)
- FLAME CLASS: 94V-0/94V-2
- COLOR: BLACK

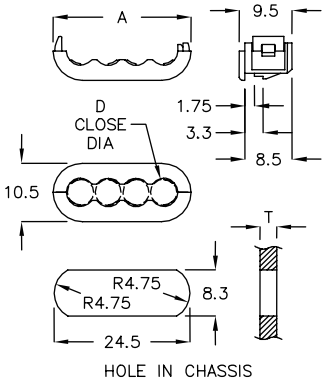

WITH LOCK FEATURE

PART NO	A	D CLOSE DIA	T CHASSIS THICKNESS	PACKAGE
FCH-24A	24.8	ø4.7~ø5.0	1.5 or 3.0	500

电线固定座 CABLE CLAMP 6-113-2

- MATERIAL: NYLON 66(UL)
- FLAME CLASS: 94V-0/94V-2
- COLOR: NATURAL

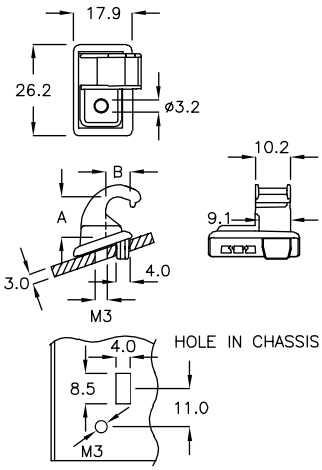

PART NO	A	B	PACKAGE
BAR-01	11.6	7.0	100

排线固定板 FLAT CABLE CLAMP 6-113-3

- MATERIAL: NYLON 66(UL)
- FLAME CLASS: 94V-0/94V-2
- COLOR: NATURAL

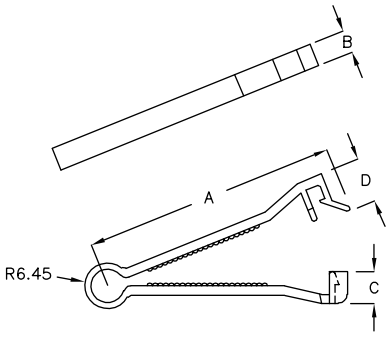

WITH LOCK FEATURE

PART NO	A	B	C	D	SUITABLE CABLE	PACKAGE
FCM-35A	70.55	6.4	8.9	12.5	40 PIN	200

排线固定板 FLAT CABLE CLAMP 6-113-4

- MATERIAL: NYLON 66(UL)
- FLAME CLASS: 94V-0/94V-2
- COLOR: NATURAL

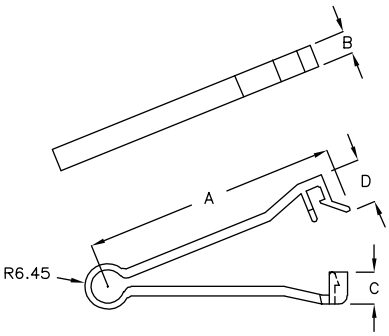

WITH LOCK FEAIURE

PART NO	A	B	C	D	SUITABLE CABLE	PACKAGE
FCM-35S	62.55	6.4	8.9	12.5	30 PIN	200
FCM-35	70.55	6.4	8.9	12.5	40 PIN	
FCM-35M	97.65	7.9	8.9	12.7	60 PIN	100

隔离束线座 WIRE SADDLE 6-114-1

- MATERIAL: NYLON 66+25%FRP
- FLAME CLASS: 94V-0/94V-2
- COLOR: BLACK

PART NO	A	B	PACKAGE
DFK-38A	38.0	42.0	500

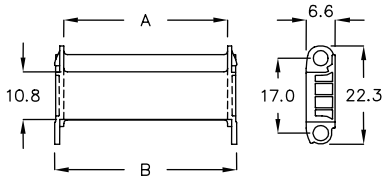

塑胶拖链 CABLE CARRIER 6-114-2

- MATERIAL: NYLON 66(UL)
- FLAME CLASS: 94V-0/94V-2
- COLOR: BLACK

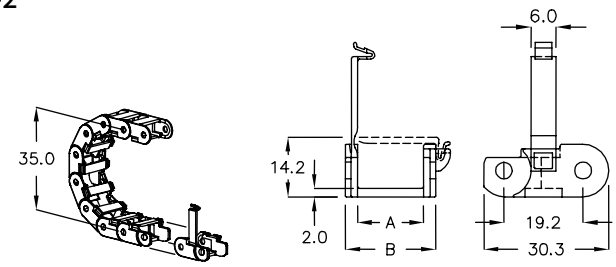

PART NO	A	B	PACKAGE
DFG-16BL	16.0	22.5	200

电线固定座 WIRE SADDLE 6-114-3

- MATERIAL: NYLON 66(UL)
- FLAME CLASS: 94V-0/94V-2
- COLOR: NATURAL

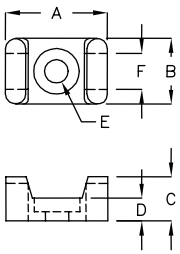

PART NO	A	B	C	D	E	F	ASSEMBLE WITH P.G. PART	PACKAGE
AB-1S	12.8	7.0	5.8	3.0	ø3.3	4.1	YJ-80, YJ-90 YJ-98, YJ-100, YJ-120 YJ-142, YJ-142S, YJ-156 YJ-160, YJ-203, YJ-203S	1000
AB-1	15.3	9.9	6.6	3.4	ø3.5	5.2	YJ-80, YJ-90 YJ-98, YJ-100, YJ-115 YJ-120, YJ-140, YJ-142 YJ-142S, YJ-156, YJ-160 YJ-203, YJ-203S, YJ-205	1000
AB-1L	23.0	15.9	9.7	5.0	ø6.55	8.25		500

ASSEMBLE WITH P.G PART YJ-SERIES (Page 12-2-1, 12-2-2)
MUST BE ASSEMBLED WITH CABLE TIE, WIDTH UP TO 3.6 or 4.8mm

电线固定座 WIRE SADDLE 6-114-4

- MATERIAL: NYLON 66(UL)
- FLAME CLASS: 94V-0/94V-2
- COLOR: BLACK

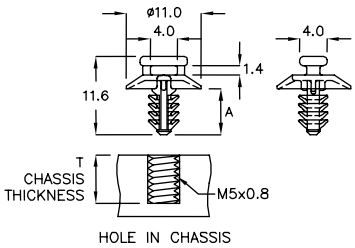

PART NO	A	T CHASSIS THICKNESS	ASSEMBLE WITH P.G. PART	PACKAGE
MBDG-11C	6.8	7.5~8.5	YJ-80, YJ-90, YJ-98 YJ-100, YJ-120, YJ-142S YJ-160, YJ-203S	500

ASSEMBLE WITH P.G PART YJ-SERIES (Page 12-2-1)
MUST BE ASSEMBLED WITH CABLE TIE, WIDTH UP TO 3.6mm

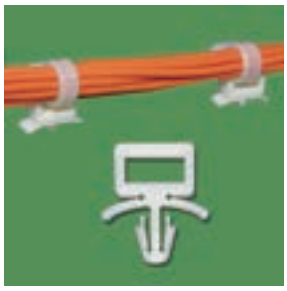

电线固定座 CABLE SADDLE 6-115-1

- MATERIAL: NYLON 66(UL)
- FLAME CLASS: 94V-0/94V-2
- COLOR: NATURAL

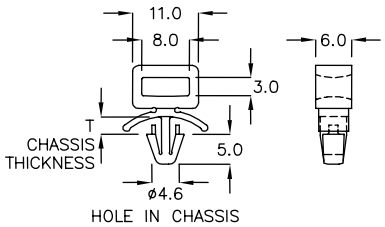

PART NO	T CHASSIS THICKNESS	ASSEMBLE WITH P.G. PART	PACKAGE
YLC-16T	0.8~2.0	YJ-80, YJ-90, YJ-98, YJ-100 YJ-115, YJ-120, YJ-140, YJ-142 YJ-142S, YJ-156, YJ-160 YJ-203, YJ-203S, YJ-205	500

ASSEMBLE WITH P.G PART YJ-SERIES (Page 12-2-1, 12-2-2)
MUST BE ASSEMBLED WITH CABLE TIE, WIDTH UP TO 4.8mm

电线固定座 CABLE SADDLE 6-115-2

- MATERIAL: NYLON 66(UL)
- FLAME CLASS: 94V-0/94V-2
- COLOR: NATURAL

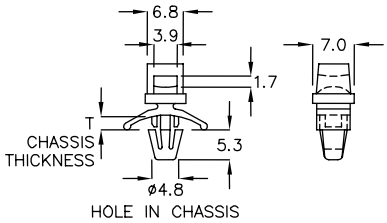

PART NO	T CHASSIS THICKNESS	ASSEMBLE WITH P.G. PART	PACKAGE
YL-1	0.8~2.0	YJ-80, YJ-90, YJ-98 YJ-100, YJ-120, YJ-142 YJ-142S, YJ-156, YJ-160 YJ-203, YJ-203S	1000

ASSEMBLE WITH P.G PART YJ-SERIES (Page 12-2-1, 12-2-2)
MUST BE ASSEMBLED WITH CABLE TIE, WIDTH UP TO 3.6mm

电线固定座 CABLE SADDLE 6-115-3

- MATERIAL: NYLON 66(UL)
- FLAME CLASS: 94V-0/94V-2
- COLOR: NATURAL

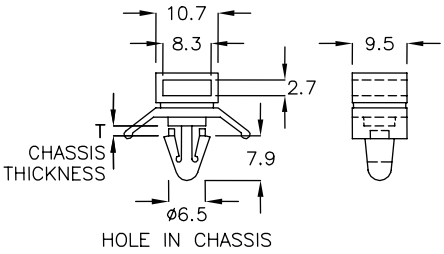

PART NO	T CHASSIS THICKNESS	ASSEMBLE WITH P.G. PART	PACKAGE
YL-06	1.6	YJ-80, YJ-90, YJ-98, YJ-100 YJ-115, YJ-120, YJ-140, YJ-142 YJ-142S, YJ-156, YJ-160 YJ-203, YJ-203S, YJ-205	500

ASSEMBLE WITH P.G PART YJ-SERIES (Page 12-2-1, 12-2-2)
MUST BE ASSEMBLED WITH CABLE TIE, WIDTH UP TO 4.8mm

电线固定座 CABLE SADDLE 6-116-1

- MATERIAL: NYLON 66(UL)
- FLAME CLASS: 94V-0/94V-2
- COLOR: NATURAL

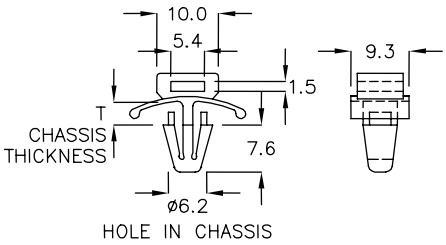

PART NO	T CHASSIS THICKNESS	ASSEMBLE WITH P.G. PART	PACKAGE
YLA-01	3.2	YJ-80, YJ-90, YJ-98 YJ-100, YJ-115, YJ-120 YJ-142S, YJ-156, YJ-160 YJ-203S, YJ-205	500

ASSEMBLE WITH P.G PART YJ-SERIES (Page 12-2-1, 12-2-2)
MUST BE ASSEMBLED WITH CABLE TIE, WIDTH UP TO 4.8mm

电线固定座 CABLE SADDLE 6-116-2

- MATERIAL: NYLON 66(UL)
- FLAME CLASS: 94V-0/94V-2
- COLOR: NATURAL

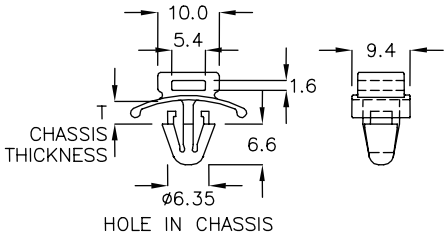

PART NO	T CHASSIS THICKNESS	ASSEMBLE WITH P.G. PART	PACKAGE
YLB-1J	1.2~2.5	YJ-80, YJ-90, YJ-98, YJ-100 YJ-115, YJ-120, YJ-140, YJ-142 YJ-142S, YJ-156, YJ-160 YJ-203, YJ-203S, YJ-205	500

ASSEMBLE WITH P.G PART YJ-SERIES (Page 12-2-1, 12-2-2)
MUST BE ASSEMBLED WITH CABLE TIE, WIDTH UP TO 4.8mm

电线固定座 CABLE SADDLE 6-116-3

- MATERIAL: NYLON 66(UL)
- FLAME CLASS: 94V-0/94V-2
- COLOR: NATURAL

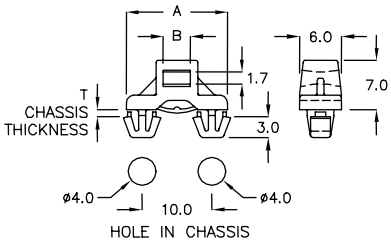

PART NO	A	B	T CHASSIS THICKNESS	ASSEMBLE WITH P.G. PART	PACKAGE
YLF-14BR	14.5	3.9	0.8	YJ-80, YJ-90, YJ-98 YJ-100, YJ-120, YJ-142 YJ-142S, YJ-156, YJ-160 YJ-203, YJ-203S	500
YLF-14AJ	14.5	3.9	3.0		

ASSEMBLE WITH P.G PART YJ-SERIES (Page 12-2-1, 12-2-2)
MUST BE ASSEMBLED WITH CABLE TIE, WIDTH UP TO 3.6mm

电线固定座 CABLE SADDLE 6-117-1

- MATERIAL: NYLON 66(UL)
- FLAME CLASS: 94V-0/94V-2
- COLOR: NATURAL

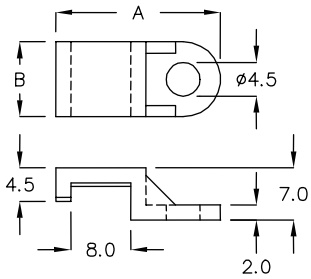

PART NO	A	B	ASSEMBLE WITH P.G. PART	PACKAGE
YL-5	22.0	10.0	YJ-80, YJ-90, YJ-98, YJ-100 YJ-115, YJ-120, YJ-140, YJ-142 YJ-142S, YJ-156, YJ-160 YJ-203, YJ-203S, YJ-205	1000

ASSEMBLE WITH P.G PART YJ-SERIES (Page 12-2-1, 12-2-2)
MUST BE ASSEMBLED WITH CABLE TIE, WIDTH UP TO 4.8mm

电线固定座 CABLE SADDLE 6-117-2

- MATERIAL: NYLON 66(UL)
- FLAME CLASS: 94V-0/94V-2
- COLOR: NATURAL

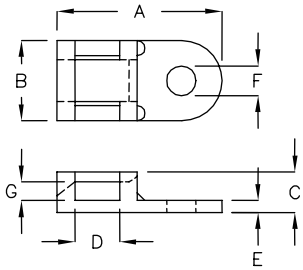

PART NO	A	B	C	D	E	F	G	ASSEMBLE WITH P.G. PART	PACKAGE
YL-3	19.5	9.5	4.8	5.3	1.4	ø3.5	2.2	YJ-80, YJ-90, YJ-98 YJ-100, YJ-115, YJ-120 YJ-140, YJ-142, YJ-142S YJ-156, YJ-160, YJ-203 YJ-203S, YJ-205	1000
YL-03A	19.05	9.65	5.1	5.05	1.6	ø4.5	2.0		
YL-3MC	21.0	11.5	5.2	5.3	1.8	ø5.2	2.0		

ASSEMBLE WITH P.G PART YJ-SERIES (Page 12-2-1, 12-2-2)
MUST BE ASSEMBLED WITH CABLE TIE, WIDTH UP TO 4.8mm

护线套 EDGING 6-117-3

- MATERIAL: NYLON 66(UL)
- FLAME CLASS: 94V-0/94V-2
- COLOR: NATURAL

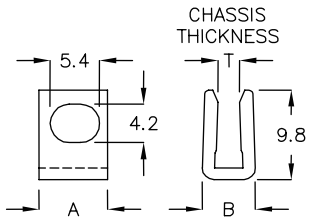

PART NO	A	B	T CHASSIS THICKNESS	ASSEMBLE WITH P.G. PART	PACKAGE
UTF-7A	7.5	5.8	3.0	YJ-80, YJ-90, YJ-98, YJ-100 YJ-115, YJ-120, YJ-140, YJ-142 YJ-142S, YJ-156, YJ-160 YJ-203, YJ-203S, YJ-205	1000

ASSEMBLE WITH P.G PART YJ-SERIES (Page 12-2-1, 12-2-2)
MUST BE ASSEMBLED WITH CABLE TIE, WIDTH UP TO 4.8mm

隔离束线座 WIRE SADDLE 6-118-1

- MATERIAL: NYLON 66(UL)
- FLAME CLASS: 94V-0/94V-2
- COLOR: NATURAL

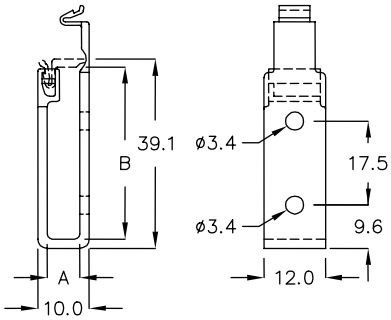

WITH LOCK FEATURE

PART NO	A	B	ASSEMBLE WITH P.G. PART	PACKAGE
CZD-39A	6.4	35.8	YJ-80, YJ-90, YJ-98 YJ-100, YJ-120, YJ-142S YJ-160, YJ-203S	100

ASSEMBLE WITH P.G PART YJ-SERIES (Page 12-2-1)
MUST BE ASSEMBLED WITH CABLE TIE, WIDTH UP TO 2.6mm

固定座 MOUNT 6-118-2

- MATERIAL: NYLON 66(UL)
- FLAME CLASS: 94V-0/94V-2
- COLOR: BLACK

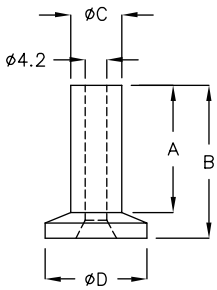

PART NO	A	B	C	D	PACKAGE
FWK-23	23.0	28.0	9.8	19.6	200
FWK-25	25.0	30.0	10.0	20.0	
FWK-27	27.5	32.5	9.8	19.6	

固定座 MOUNT 6-118-3

- MATERIAL: NYLON 66(UL)
- FLAME CLASS: 94V-0/94V-2
- COLOR: BLACK

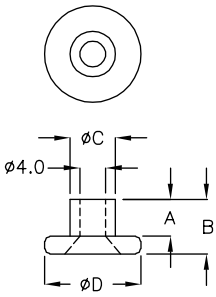

PART NO	A	B	C	D	PACKAGE
FWK-08	5.7	8.4	7.0	14.9	500

电线固定板 WIRE CLAMP 6-118-4

- MATERIAL: NYLON 66(UL)
- FLAME CLASS: 94V-0/94V-2
- COLOR: NATURAL

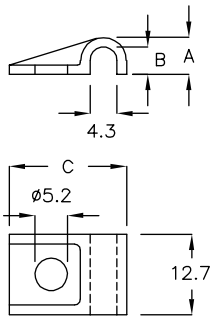

PART NO	A	B	C	PACKAGE
FSA-01	5.9	4.4	18.6	500

压线固定板 WIRE CLAMP — 6-119-1

- MATERIAL: NYLON 66(UL)
- FLAME CLASS: 94V-0/94V-2
- COLOR: NATURAL

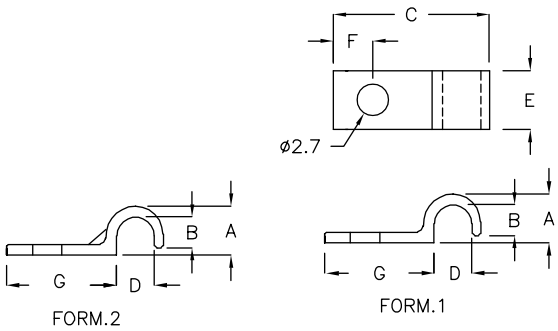

此产品亦可贴背胶

OPTIONAL WITH ADHESIVE TAPE ON BASE

PART NO	A	B	C	D	E	F	G	FORM	PACKAGE
FSK-5A	3.0	1.8	12.8	2.0	5.0	5.0	10.0	1	1000
FSK-08	4.5	3.2	14.3	3.5	8.0	3.7	10.0	2	
FSK-10	5.5	4.1	15.3	4.5	10.0	3.7	10.0	2	500
FSK-10RP	6.5	5.0	16.0	5.5	10.0	3.0	9.3	2	
FSK-10KM	7.5	5.9	17.0	6.5	10.0	3.0	9.3	2	

隔离束线座 WIRE SADDLE — 6-119-2

- MATERIAL: NYLON 66(UL)
- FLAME CLASS: 94V-0/94V-2
- COLOR: NATURAL
- WITH M3 SCREW

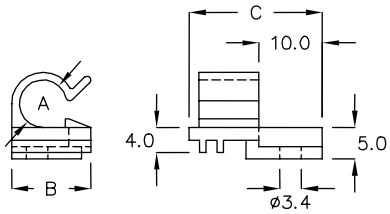

PART NO	A	B	C	PACKAGE
CHF-7	ø7.5	12.5	21.0	500

隔离束线座 WIRE SADDLE — 6-119-3

- MATERIAL: NYLON 66(UL)
- FLAME CLASS: 94V-0/94V-2
- COLOR: NATURAL

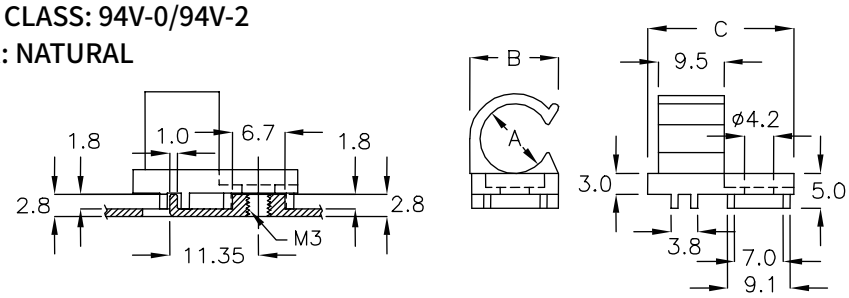

PART NO	A	B	C	PACKAGE
CHF-7A	ø10.0	12.8	21.0	500

电线固定座 WIRE MOUNT — 6-119-4

- MATERIAL: NYLON 66(UL)
- FLAME CLASS: 94V-0/94V-2
- COLOR: NATURAL
- WITH M3 or #6-32 SCREW

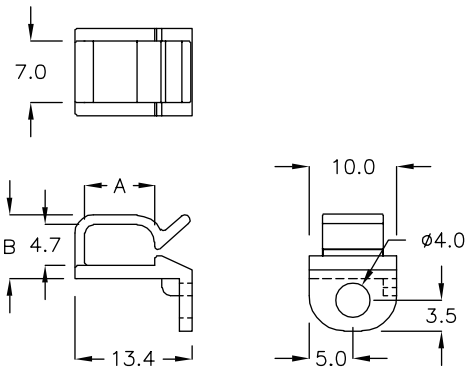

PART NO	A	B	PACKAGE
FAC-01	8.0	7.3	1000

电线固定座 WIRE MOUNT — 6-120-1

- MATERIAL: NYLON 66(UL)
- FLAME CLASS: 94V-0/94V-2
- COLOR: NATURAL
- WITH M3 or #6-32 SCREW

PART NO	A	B	PACKAGE
FAC-02	9.0	8.7	1000

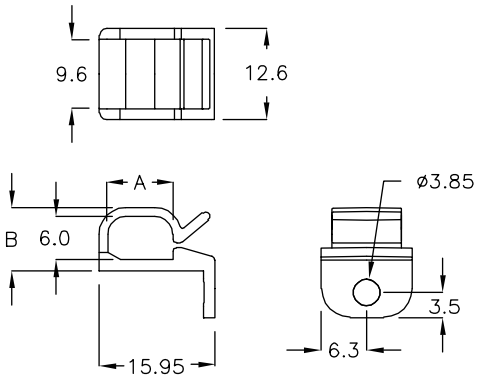

电源线固定座 POWER CORD MOUNTING — 6-120-2

- MATERIAL: NYLON 66(UL)
- FLAME CLASS: 94V-0/94V-2
- COLOR: BLACK
- WITH M3 SCREW

PART NO	A	PACKAGE
FWI-8CM	ø7.5~ø8.3	100

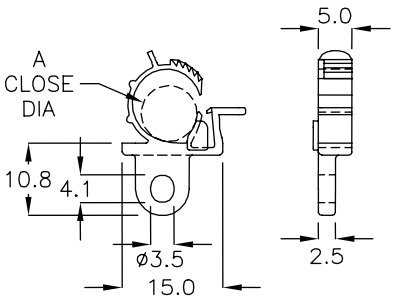

电线固定座 WIRE MOUNT — 6-120-3

- MATERIAL: NYLON 66(UL)
- FLAME CLASS: 94V-0/94V-2
- COLOR: NATURAL
- WITH M3 SCREW

PART NO	A	B	PACKAGE
FAF-10	ø10.0	14.5	500

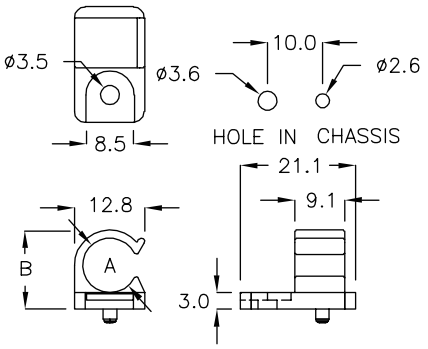

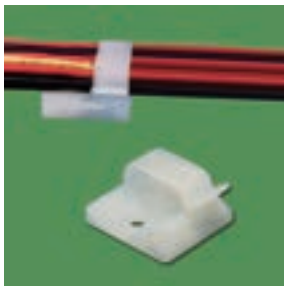

电线固定座 WIRE MOUNT — 6-120-4

- MATERIAL: NYLON 66(UL)
- FLAME CLASS: 94V-0/94V-2
- COLOR: NATURAL
- WITH M3 SCREW

PART NO	A	B	PACKAGE
FAG-01	14.0	9.9	500

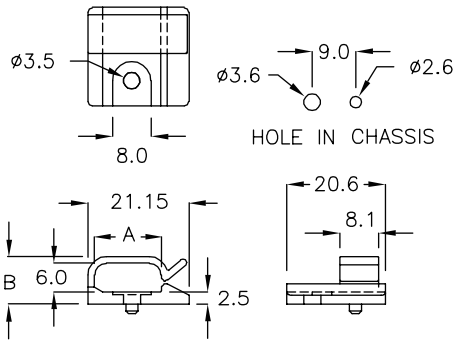

电线固定座 WIRE MOUNT — 6-120-5

- MATERIAL: NYLON 66(UL)
- FLAME CLASS: 94V-0/94V-2
- COLOR: NATURAL
- WITH M3 SCREW

PART NO	A	B	C	PACKAGE
CHG-04	12.3	6.0	5.6	1000

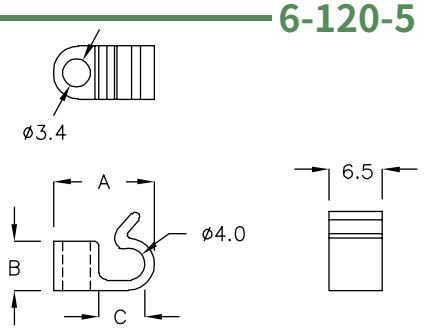

隔离束线座 WIRE SADDLE 6-121-1

- MATERIAL: NYLON 66(UL)
- FLAME CLASS: 94V-0/94V-2
- COLOR: BLACK
- WITH M3 COUNTERSUNK SCREW

NEW

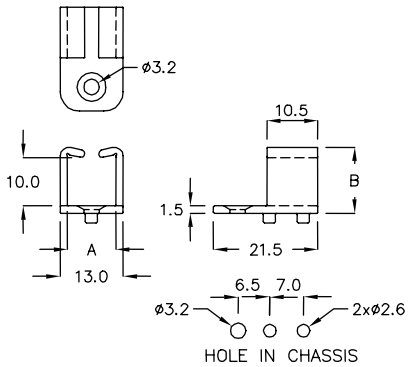

	PART NO	A	B	PACKAGE
★	CHF-10A	10.0	13.6	200

隔离束线座 WIRE SADDLE 6-121-2

- MATERIAL: NYLON 66(UL)
- FLAME CLASS: 94V-0/94V-2
- COLOR: BLACK

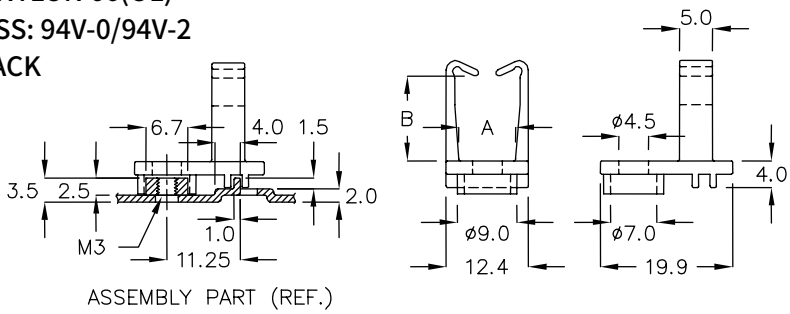

PART NO	A	B	PACKAGE
CHF-11	8.0	12.8	500

隔离束线座 WIRE SADDLE 6-121-3

- MATERIAL: NYLON 66(UL)
- FLAME CLASS: 94V-0/94V-2
- COLOR: NATURAL

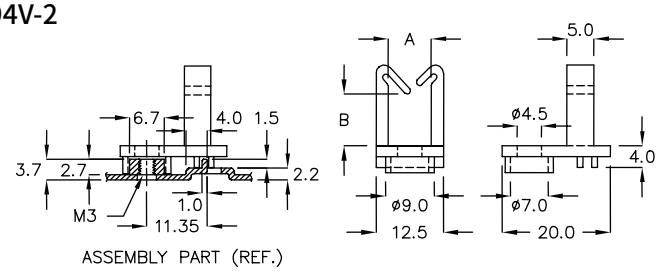

PART NO	A	B	PACKAGE
CHF-11E	8.0	11.2	500

隔离束线座 WIRE SADDLE 6-121-4

- MATERIAL: NYLON 66(UL)
- FLAME CLASS: 94V-0/94V-2
- COLOR: BLACK
  WITH M3 SCREW

NEW

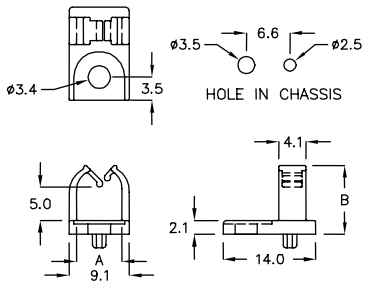

	PART NO	A	B	PACKAGE
★	CHFB-7A	6.9	10.4	500

隔离束线座 WIRE SADDLE 6-121-5

- MATERIAL: NYLON 66(UL)
- FLAME CLASS: 94V-0/94V-2
- COLOR: NATURAL
- WITH M3 SCREW

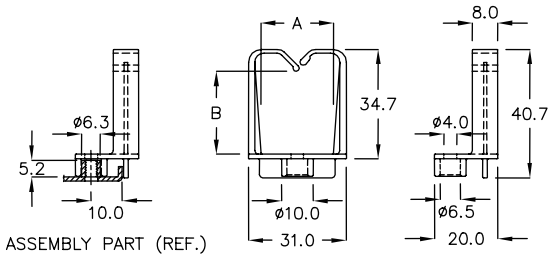

PART NO	A	B	PACKAGE
CHFM-27SJ	23.0	26.0	100

隔离束线座 WIRE SADDLE 6-122-1

- MATERIAL: NYLON 66(UL)
- FLAME CLASS: 94V-0/94V-2
- COLOR: NATURAL
- WITH M3 SCREW

PART NO	A	B	PACKAGE
CNFK-11T	11.1	16.6	500

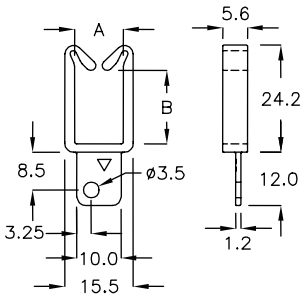

隔离束线座 WIRE SADDLE 6-122-2

- MATERIAL: NYLON 66(UL)
- FLAME CLASS: 94V-0/94V-2
- COLOR: NATURAL
- WITH M3 or #6-32 SCREW

PART NO	A	B	PACKAGE
CNF-11	11.1	18.5	500

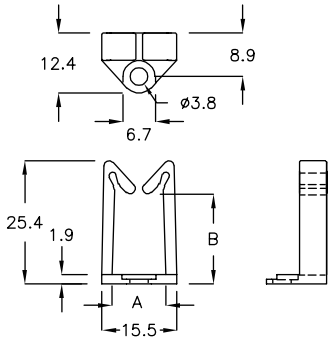

隔离束线座 WIRE SADDLE 6-122-3

- MATERIAL: NYLON 66(UL)
- FLAME CLASS: 94V-0/94V-2
- COLOR: NATURAL
- WITH M3 SCREW

PART NO	A	B	PACKAGE
CNFA-11GS	11.1	16.6	500

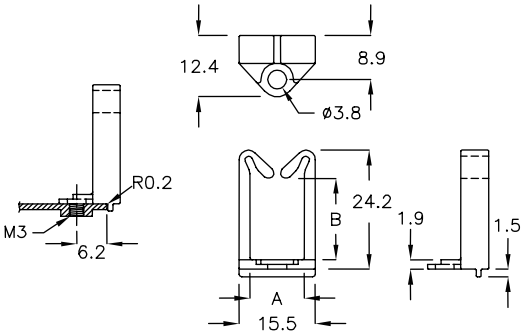

隔离束线座 WIRE SADDLE 6-122-4

- MATERIAL: NYLON 66(UL)
- FLAME CLASS: 94V-0/94V-2
- COLOR: NATURAL
- WITH M3 SCREW

PART NO	A	B	PACKAGE
CNF-12R	12.0	18.5	500

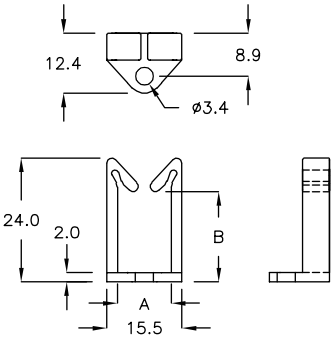

隔离束线座 WIRE SADDLE 6-122-5

- MATERIAL: NYLON 66(UL)
- FLAME CLASS: 94V-0/94V-2
- COLOR: NATURAL
- WITH M3 SCREW

PART NO	A	B	PACKAGE
CNK-11DY	11.3	29.2	200

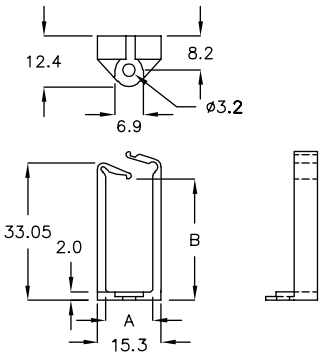

隔离束线座 WIRE SADDLE 6-123-1

- MATERIAL: NYLON 66(UL)
- FLAME CLASS: 94V-0/94V-2
- COLOR: BLACK
- WITH M3 SCREW

PART NO	A	B	PACKAGE
CNK-11PH	11.3	46.1	100

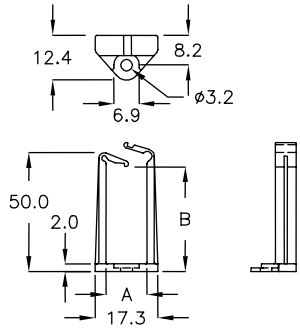

隔离束线座 WIRE SADDLE 6-123-2

- MATERIAL: NYLON 66(UL)
- FLAME CLASS: 94V-0/94V-2
- COLOR: BLACK
- WITH M3 SCREW

PART NO	A	B	PACKAGE
CNTF-5HY	5.0	26.0	200

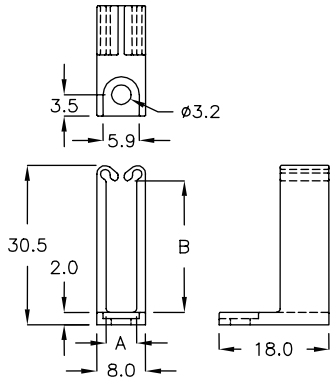

电线固定座 WIRE MOUNT 6-123-3

- MATERIAL: NYLON 66(UL)
- FLAME CLASS: 94V-0/94V-2
- COLOR: NATURAL
- WITH M3 SCREW

PART NO	A	B	PACKAGE
CMS-22JC	ø7.5	9.5	500

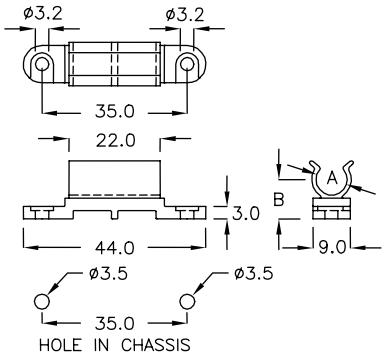

隔离束线座 WIRE SADDLE 6-123-4

- MATERIAL: NYLON 66(UL)
- FLAME CLASS: 94V-0/94V-2
- COLOR: BLUE
- WITH M3 SCREW

PART NO	A	B	PACKAGE
CHFK-11JS	13.8	11.9	500

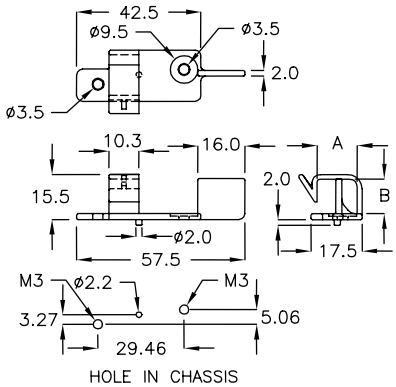

电线固定座 WIRE MOUNT 6-123-5

- MATERIAL: NYLON 66(UL)
- FLAME CLASS: 94V-0/94V-2
- COLOR: BLACK
- WITH M3 SCREW

PART NO	A	B	PACKAGE
CNR-31A	ø7.0	10.8	500

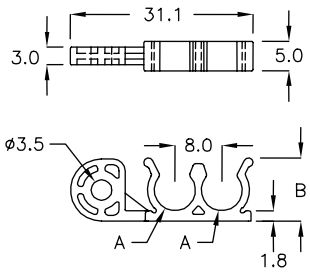

电线固定座 TIE MOUNT 6-124-1

- MATERIAL: NYLON 66(UL)
- FLAME CLASS: 94V-0/94V-2
- COLOR: NATURAL
- WITH M3 SCREW

PART NO	A	B	C	PACKAGE
CTT-91	91.2	15.0	2.0	200

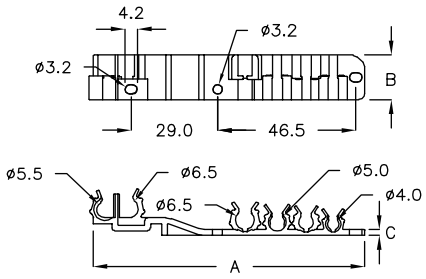

电线固定座 WIRE MOUNT 6-124-2

- MATERIAL: NYLON 66(UL)
- FLAME CLASS: 94V-0/94V-2
- COLOR: BLACK
- WITH M3 SCREW

	PART NO	A	B	C	D	PACKAGE
★	FW-12C	ø12.0	13.7	8.9	17.0	500
	FW-08A	ø16.0	15.5	9.3	19.6	

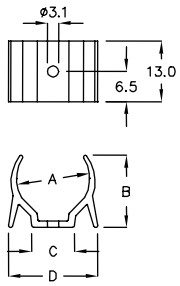

电线固定座 WIRE MOUNT 6-124-3

- MATERIAL: NYLON 66(UL)
- FLAME CLASS: 94V-0/94V-2
- COLOR: NATURAL
- WITH M3 SCREW

PART NO	A	B	C	PACKAGE
CHFW-7A	ø7.2	10.4	11.7	500

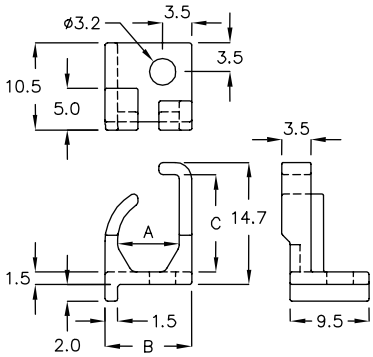

隔离束线座 WIRE SADDLE 6-124-4

- MATERIAL: NYLON 66(UL)
- FLAME CLASS: 94V-0/94V-2
- COLOR: BLACK
- WITH M3 COUNTERSUNK SCREW

PART NO	A	B	C	D	E	PACKAGE
CNQ-30A	30.0	33.2	15.0	19.1	20.5	500
CNQ-40K	40.0	43.2	8.0	12.1	30.0	

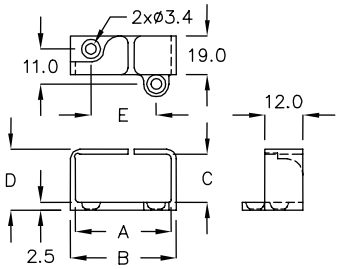

隔离束线座 WIRE SADDLE 6-124-5

- MATERIAL: NYLON 66(UL)
- FLAME CLASS: 94V-0/94V-2
- COLOR: BLACK
- WITH M2.5 COUNTERSUNK SCREW

PART NO	A	B	D	E	F	PACKAGE
CNW-20AM	20.0	18.7	25.1	28.6	7.5	100
CNW-20TP	20.0	10.7	17.1	28.0	5.2	

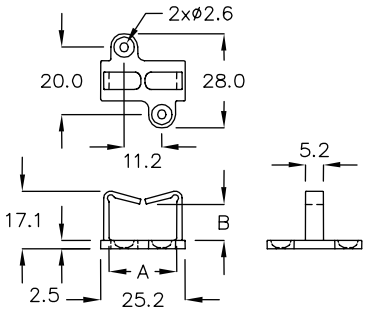

隔离束线座 WIRE SADDLE 6-125-1

- MATERIAL: NYLON 66(UL)
- FLAME CLASS: 94V-0/94V-2
- COLOR: BLACK
- WITH M3 COUNTERSUNK SCREW

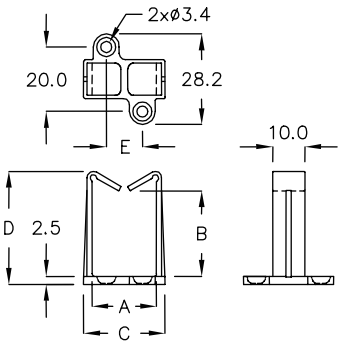

PART NO	A	B	C	D	E	PACKAGE
CNW-19AT	19.8	16.5	25.0	25.0	11.2	500
CNW-20K	20.0	26.5	25.2	35.0	14.2	

隔离束线座 WIRE SADDLE 6-125-2

- MATERIAL: NYLON 66(UL)
- FLAME CLASS: 94V-0/94V-2
- COLOR: BLACK
- WITH M3 COUNTERSUNK SCREW

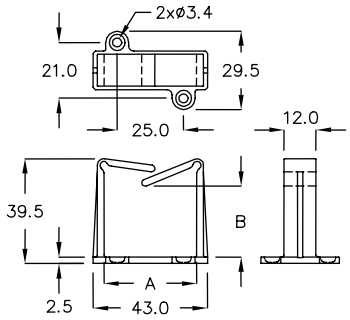

PART NO	A	B	PACKAGE
CNW-35H	35.0	26.7	100

隔离束线座 WIRE SADDLE 6-125-3

- MATERIAL: NYLON 66(UL)
- FLAME CLASS: 94V-0/94V-2
- COLOR: BLACK
- WITH M3 COUNTERSUNK SCREW

NEW

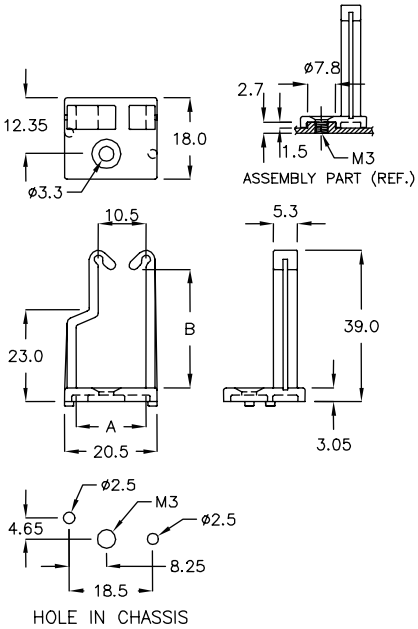

	PART NO	A	B	PACKAGE
★	CNWA-15B	15.5	31.7	200

隔离束线座 WIRE SADDLE 6-125-4

- MATERIAL: NYLON 66(UL)
- FLAME CLASS: 94V-0/94V-2
- COLOR: BLACK
- WITH M3 COUNTERSUNK SCREW

NEW

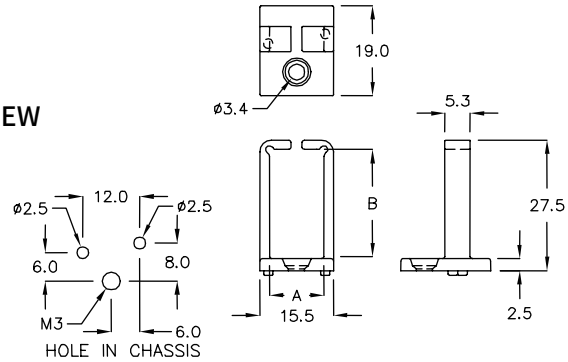

	PART NO	A	B	PACKAGE
★	CNWG-11C	11.5	23.0	1000

隔离束线座 WIRE SADDLE 6-126-1

- MATERIAL: NYLON 66(UL)
- FLAME CLASS: 94V-0/94V-2
- COLOR: BLACK
- WITH M3 COUNTERSUNK SCREW

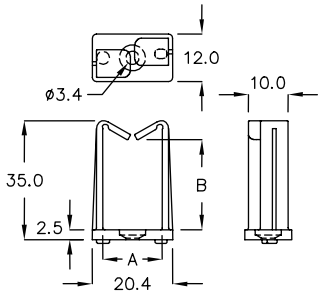

PART NO	A	B	PACKAGE
CNWF-15A	15.2	27.5	200

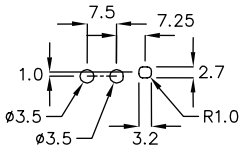

HOLE IN CHASSIS

隔离束线座 WIRE SADDLE 6-126-2

- MATERIAL: NYLON 66(UL)
- FLAME CLASS: 94V-0/94V-2
- COLOR: BLACK
- WITH M3 COUNTERSUNK SCREW

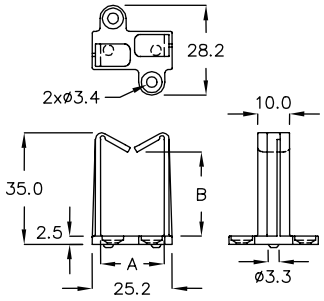

PART NO	A	B	PACKAGE
CNWZ-20D	20.0	26.5	500

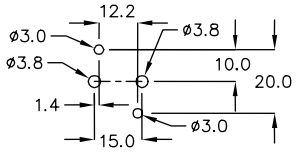

HOLE IN CHASSIS

隔离束线座 WIRE SADDLE 6-126-3

- MATERIAL: NYLON 66(UL)
- FLAME CLASS: 94V-0/94V-2
- COLOR: BLACK
- WITH M3 COUNTERSUNK SCREW

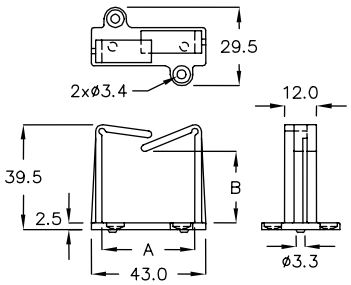

PART NO	A	B	PACKAGE
CNWZ-35M	35.0	26.9	100

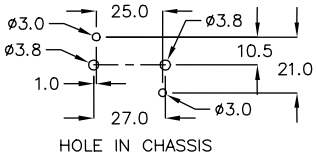

HOLE IN CHASSIS

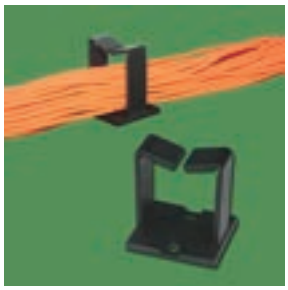

隔离束线座 WIRE SADDLE 6-126-4

- MATERIAL: NYLON 66(UL)
- FLAME CLASS: 94V-0/94V-2
- COLOR: BLACK
- WITH M3 SCREW

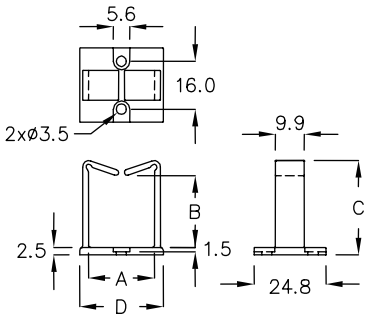

PART NO	A	B	C	D	PACKAGE
CNH-22DC	22.8	24.0	31.5	28.8	100
CNH-28MG	28.6	40.4	53.2	35.0	

隔离束线座 WIRE SADDLE 6-127-1

- MATERIAL: NYLON 66(UL)
- FLAME CLASS: 94V-0/94V-2
- COLOR: BLACK
- WITH M4 SCREW

NEW

	PART NO	A	B	C	D	PACKAGE
★	CNHB-22A	22.8	29.0	36.5	26.8	100

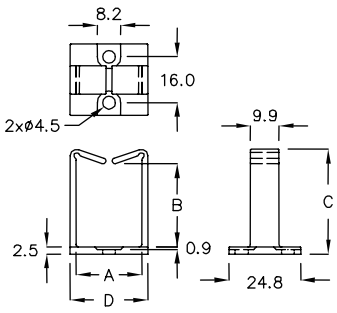

隔离束线座 WIRE SADDLE 6-127-2

- MATERIAL: NYLON 66(UL)
- FLAME CLASS: 94V-0/94V-2
- COLOR: BLACK
- WITH M4 COUNTERSUNK SCREW

NEW

	PART NO	A	B	PACKAGE
★	CKFA-22A	22.0	9.0	100

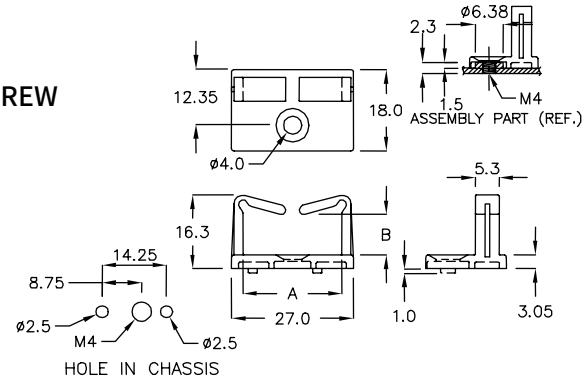

隔离束线座 WIRE SADDLE 6-127-3

- MATERIAL: NYLON 66(UL)
- FLAME CLASS: 94V-0/94V-2
- COLOR: BLACK
- WITH M4 SCREW

NEW

	PART NO	A	B	PACKAGE
★	CHFG-6AB	6.9	5.0	1000

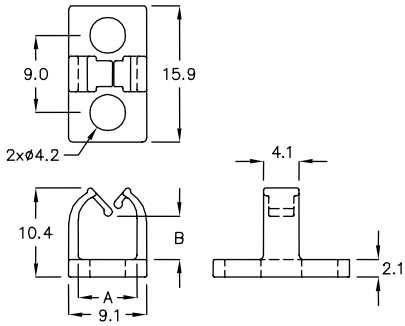

隔离束线座 WIRE SADDLE 6-127-4

- MATERIAL: NYLON 66(UL)
- FLAME CLASS: 94V-0/94V-2
- COLOR: BLACK
- WITH M4 SCREW

PART NO	A	B	C	D	PACKAGE
PACB-51Q	27.0	44.7	31.0	50.7	100

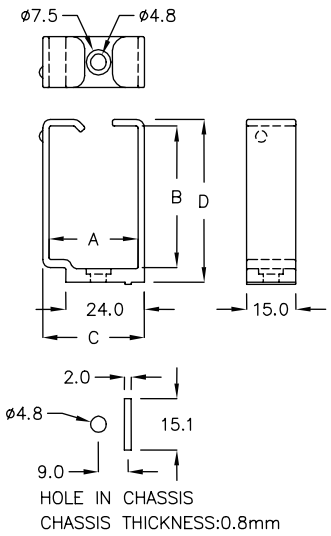

隔离束线座 WIRE SADDLE 6-128-1

- MATERIAL: NYLON 66(UL)
- FLAME CLASS: 94V-0/94V-2
- COLOR: NATURAL
- WITH M4 COUNTERSUNK SCREW

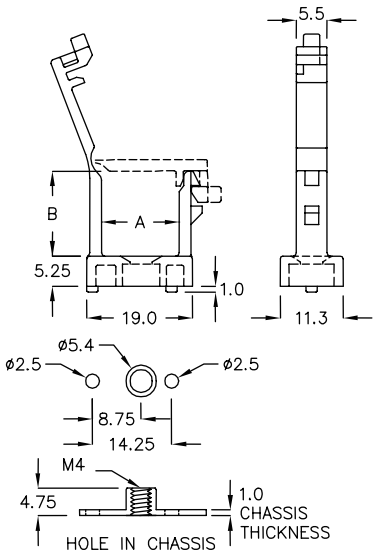

WITH LOCK FEATURE

PART NO	A	B	PACKAGE
CKFM-14QR	14.0	17.0	500

隔离束线座 WIRE SADDLE 6-128-2

- MATERIAL: NYLON 66(UL)
- FLAME CLASS: 94V-0/94V-2
- COLOR: BLACK
- WITH M3 SCREW

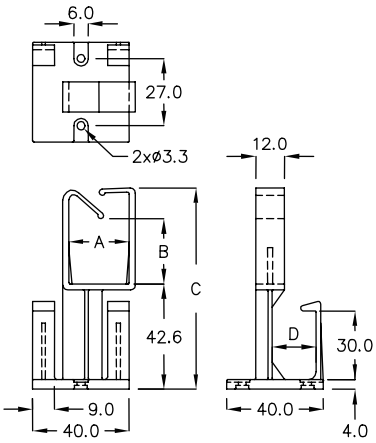

PART NO	A	B	C	D	PACKAGE
CNHA-25SK	25.0	31.0	85.7	18.25	50

排线固定座 FLAT CABLE CLIP 6-128-3

- MATERIAL: NYLON 66(UL)
- FLAME CLASS: 94V-0/94V-2
- COLOR: NATURAL

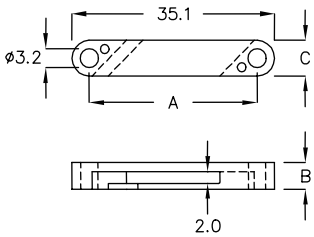

PART NO	A	B	C	PACKAGE
FCM-01	29.1	4.5	6.0	500

电线固定座 WIRE MOUNT 6-128-4

- MATERIAL: NYLON 66(UL)
- FLAME CLASS: 94V-0/94V-2
- COLOR: BLACK

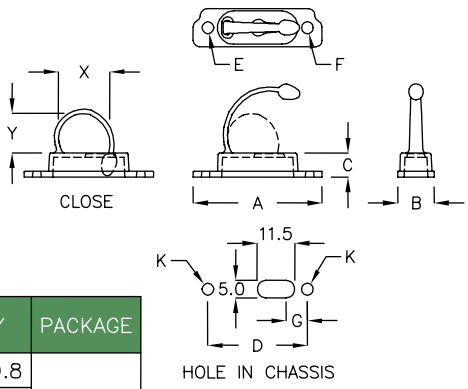

WITH LOCK FEATURE

PART NO	A	B	C	D	E	F	G	K SCREW	X	Y	PACKAGE
CMD-3H	44.0	13.0	8.5	34.0	ø4.0	ø4.0	9.3	M3	18.0	20.8	200
CMD-3KZ	44.0	13.0	8.5	34.0	ø3.0	ø3.0	9.3	M2.5	18.0	20.8	
CMD-08	44.0	12.5	8.0	34.0	ø4.0	ø4.0	9.5	M3	14.7	11.0	
CMD-8F	44.0	13.0	8.5	34.0	ø3.8	ø3.8	9.3	M3	16.0	14.2	
CMD-8TM	56.0	15.0	8.5	46.0	3.2x4.0	ø3.2	10.8	M3	23.0	16.0	

电线固定座 WIRE MOUNT 6-129-1

- MATERIAL: NYLON 66(UL)
- FLAME CLASS: 94V-0/94V-2
- COLOR: BLACK
- WITH M3 COUNTERSUNK SCREW

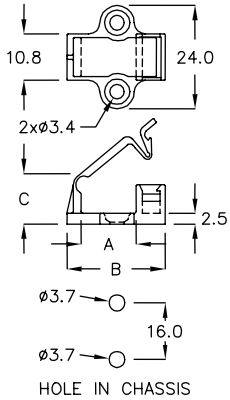

WITH LOCK FEATURE

PART NO	A	B	C	PACKAGE
FCNQ-22BS	12.8	22.8	11.7	100

电线固定座 WIRE MOUNT 6-129-2

- MATERIAL: NYLON 66(UL)
- FLAME CLASS: 94V-0/94V-2
- COLOR: BLACK
- WITH M3 COUNTERSUNK SCREW

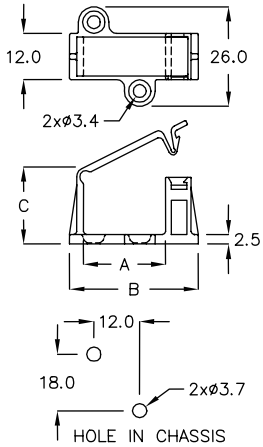

WITH LOCK FEATURE

PART NO	A	B	C	PACKAGE
FCJS-33TY	21.5	33.7	20.2	100

电线固定板 CABLE CLAMP 6-129-3

- MATERIAL: NYLON 66(UL)
- FLAME CLASS: 94V-0/94V-2
- COLOR: NATURAL
- WITH M3 COUNTERSUNK SCREW

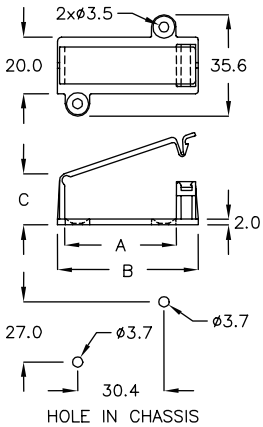

WITH LOCK FEATURE

PART NO	A	B	C	PACKAGE
FAK-39LY	39.4	49.7	18.0	100

电线固定板 CABLE CLAMP 6-129-4

- MATERIAL: NYLON 66(UL)
- FLAME CLASS: 94V-0/94V-2
- COLOR: BLACK
- WITH M3 COUNTERSUNK SCREW

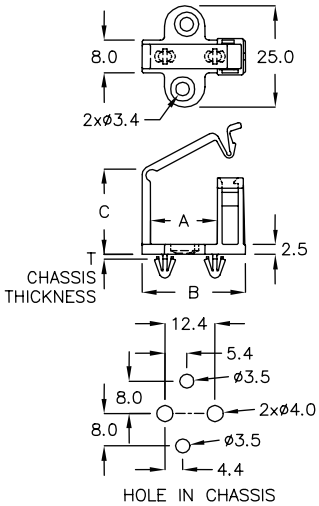

WITH LOCK FEATURE

PART NO	A	B	C	T CHASSIS THICKNESS	PACKAGE
FCJK-16A	16.5	25.5	27.0	1.0	200

电线固定板 CABLE CLAMP 6-130-1

- MATERIAL: NYLON 66(UL)
- FLAME CLASS:94V-0/94V-2
- COLOR: BLACK
- WITH M3 COUNTERSUNK SCREW

WITH LOCK FEATURE

PART NO	A	B	C	PACKAGE
FAKT-22C	22.0	29.4	12.3	100

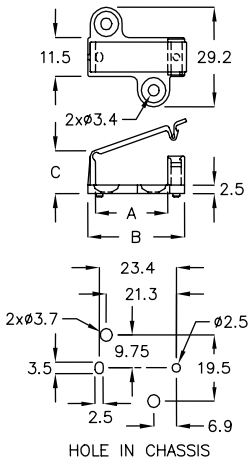

电线固定座 WIRE MOUNT 6-130-2

- MATERIAL: NYLON 66(UL)
- FLAME CLASS:94V-0/94V-2
- COLOR: BLACK
- WITH M3 COUNTERSUNK SCREW

WITH LOCK FEATURE

PART NO	A	B	C	PACKAGE
FCWB-63TM	41.35	63.1	9.2	100
FCWB-63GS	41.35	63.1	13.8	

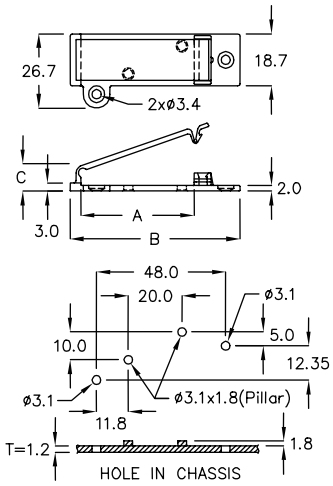

电线固定座 WIRE MOUNT 6-130-3

- MATERIAL: NYLON 66(UL)
- FLAME CLASS: 94V-0/94V-2
- COLOR: BLACK
- WITH COUNTERSUNK SCREW

WITH LOCK FEATURE

PART NO	A	D	PACKAGE
CZG-52FA	7.5	58.0	100

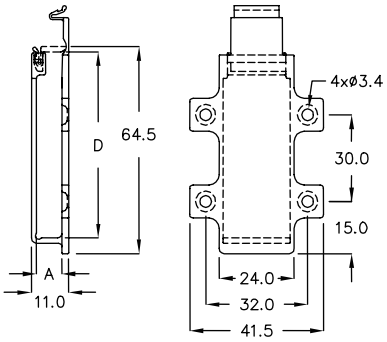

电线固定座 WIRE MOUNT 6-130-4

- MATERIAL: NYLON 66(UL)
- FLAME CLASS: 94V-0/94V-2
- COLOR: BLACK
- WITH COUNTERSUNK SCREW

WITH LOCK FEATURE

PART NO	A	B	C	PACKAGE
FCE-18A	18.5	26.15	9.7	200

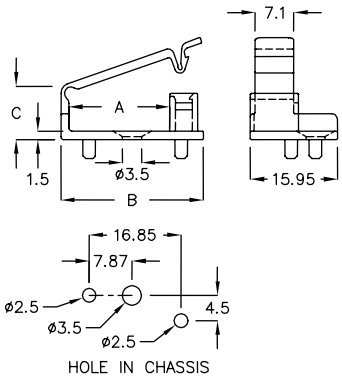

电线固定板 CABLE CLAMP 6-131-1

- MATERIAL: NYLON 66(UL)
- FLAME CLASS: 94V-0/94V-2
- COLOR: BLACK
- WITH #6-32(FLAT) SCREW

NEW

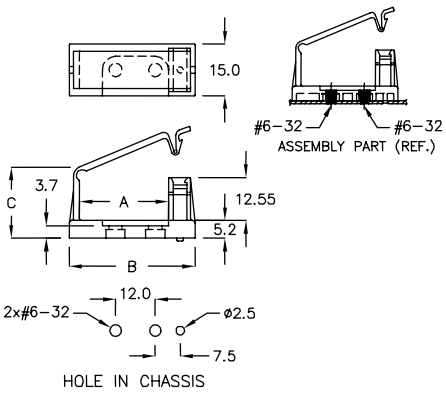

WITH LOCK FEATURE

	PART NO	A	B	C	PACKAGE
★	FCWG-27A	26.9	38.0	20.6	100

电线固定板 CABLE CLAMP 6-131-2

- MATERIAL: NYLON 66(UL)
- FLAME CLASS: 94V-0/94V-2
- COLOR: BLACK
- WITH M3 COUNTERSUNK SCREW

WITH LOCK FEATURE

PART NO	A	B	C	PACKAGE
FCWY-18T	18.5	26.15	8.9	100

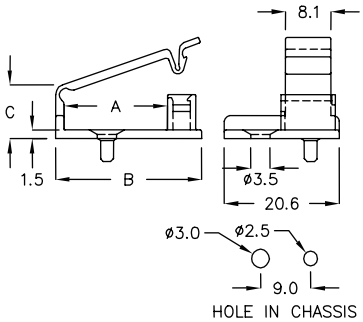

电线固定板 WIRE MOUNT 6-131-3

- MATERIAL: NYLON 66(UL)
- FLAME CLASS: 94V-0/94V-2
- COLOR: BLACK
- WITH M3 COUNTERSUNK SCREW

WITH LOCK FEATURE

PART NO	A	B	C	PACKAGE
FCWC-63AT	42.05	63.1	13.1	100

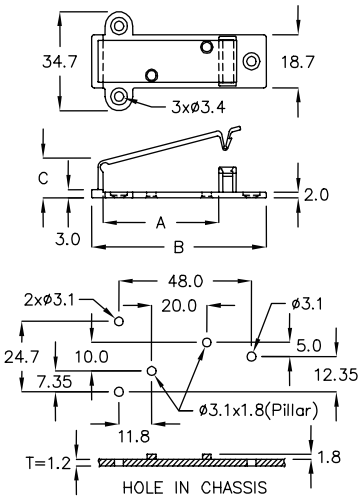

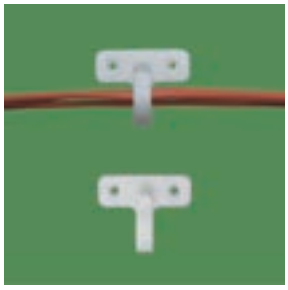

固定座 MOUNT 6-131-4

- MATERIAL: NYLON 66(UL)
- FLAME CLASS: 94V-0/94V-2
- COLOR: NATURAL
- WITH M2 COUNTERSUNK SCREW

NEW

	PART NO	A	PACKAGE
★	MMCB-13A	28.0	500

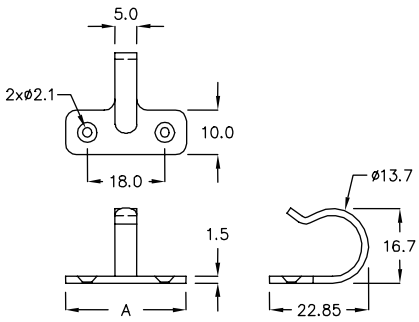

电线固定座 WIRE MOUNT 6-132-1

- MATERIAL: NYLON 66(UL)
- FLAME CLASS: 94V-0/94V-2
- COLOR: NATURAL
- WITH M2 COUNTERSUNK SCREW

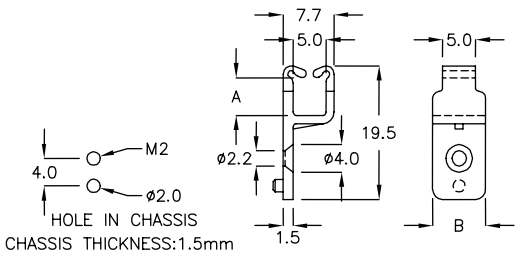

PART NO	A	B	PACKAGE
CNJ-19MT	5.5	8.0	500

隔离束线座 WIRE SADDLE 6-132-2

- MATERIAL: NYLON 66(UL)
- FLAME CLASS: 94V-0/94V-2
- COLOR: BLACK

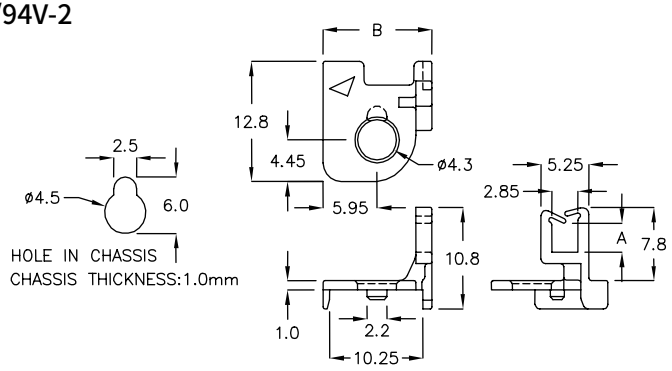

PART NO	A	B	PACKAGE
ABGX-13C	3.1	12.0	1000

电线固定座 WIRE MOUNT 6-132-3

- MATERIAL: NYLON 66(UL)
- FLAME CLASS: 94V-0/94V-2
- COLOR: NATURAL

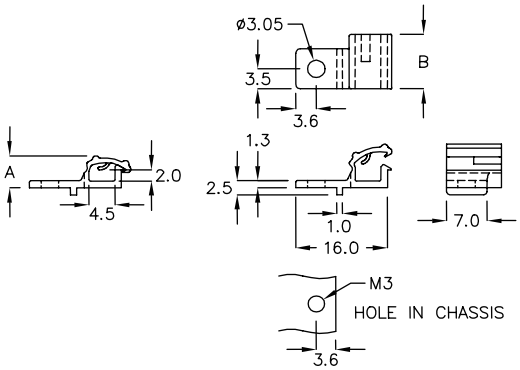

PART NO	A	B	PACKAGE
KYA-17	5.7	9.5	1000

电线固定座 WIRE MOUNT 6-132-4

- MATERIAL: NYLON 66(UL)
- FLAME CLASS: 94V-0/94V-2
- COLOR: BLACK

WITH LOCK FEATURE

PART NO	A	B	C	T CHASSIS THICKNESS	PACKAGE
CYX-121	14.7	24.2	8.4	0.6	200
CYX-121KP	19.7	29.2	13.4	0.6	

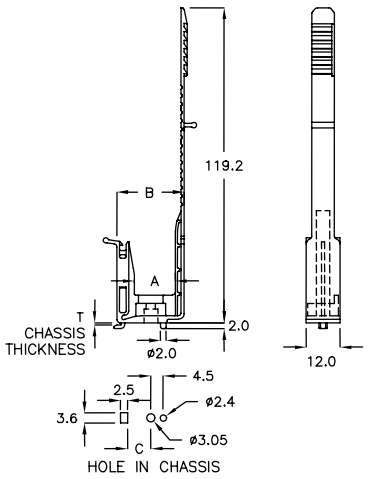

电线固定座 WIRE MOUNT 6-133-1

- MATERIAL: NYLON 66(UL)
- FLAME CLASS: 94V-0/94V-2
- COLOR: NATURAL
- WITH M3 TAPPING SCREW

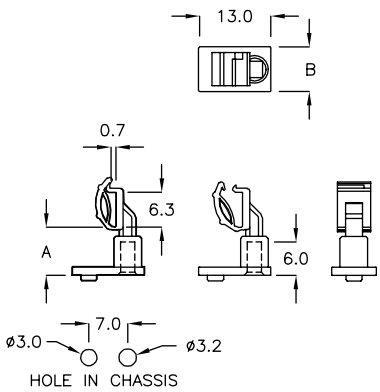

WITH LOCK FEATURE

PART NO	A	B	PACKAGE
CAF-8A	8.7	8.0	500

电线固定座 WIRE MOUNT 6-133-2

- MATERIAL: NYLON 66(UL)
- FLAME CLASS: 94V-0/94V-2
- COLOR: NATURAL

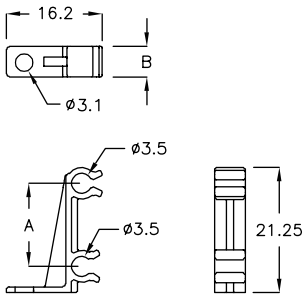

PART NO	A	B	PACKAGE
CMP-21A	14.0	5.2	500

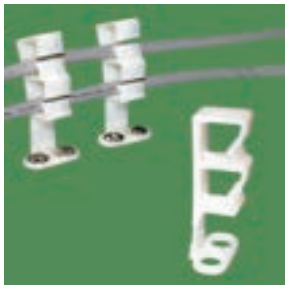

隔离束线座 WIRE SADDLE 6-133-3

- MATERIAL: NYLON 66(UL)
- FLAME CLASS: 94V-0/94V-2
- COLOR: NATURAL

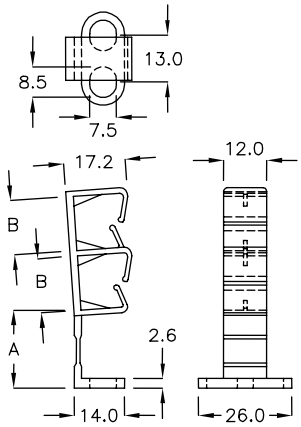

PART NO	A	B	PACKAGE
2CH-15	21.7	15.0	100

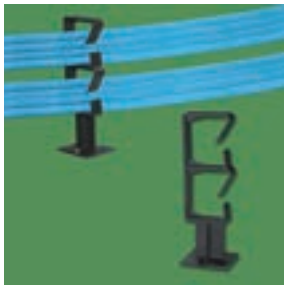

隔离束线座 WIRE SADDLE 6-133-4

- MATERIAL: NYLON 66(UL)
- FLAME CLASS: 94V-0/94V-2
- COLOR: BLACK

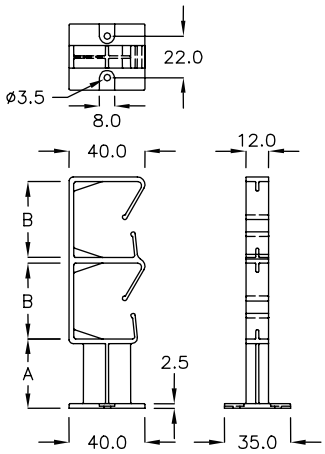

PART NO	A	B	PACKAGE
2CH-40MP	36.7	40.3	50

隔离束线座 WIRE SADDLE 6-134-1

- MATERIAL: NYLON 66(UL)
- FLAME CLASS: 94V-0/94V-2
- COLOR: NATURAL
- ADHESIVE TAPE: 3M

PART NO	A	B	PACKAGE
2CH-15A	22.6	15.0	100

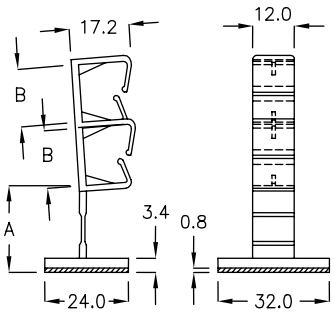

隔离束线座 WIRE SADDLE 6-134-2

- MATERIAL: NYLON 66(UL)
- FLAME CLASS: 94V-0/94V-2
- COLOR: NATURAL

PART NO	A	B	PACKAGE
3CH-15	27.6	15.1	100

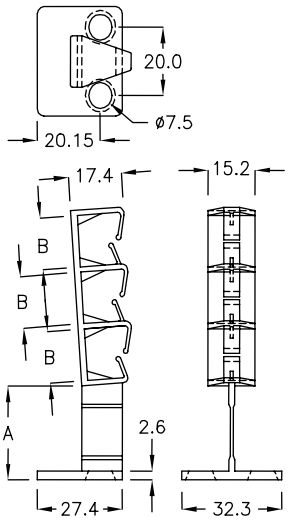

消磁线圈固定座 DEGAUSS COIL CLIP 6-134-3

- MATERIAL: NYLON 66(UL)
- FLAME CLASS: 94V-0/94V-2
- COLOR: NATURAL

PART NO	A	B	PACKAGE
CH-38	7.8	13.0	200

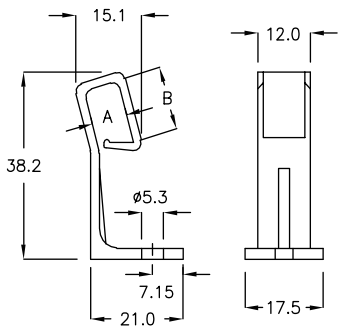

消磁线圈固定座 DEGAUSS COIL CLIP 6-134-4

- MATERIAL: NYLON 66(UL)
- FLAME CLASS: 94V-0/94V-2
- COLOR: NATURAL

PART NO	A	B	PACKAGE
CH-48	10.0	10.0	200

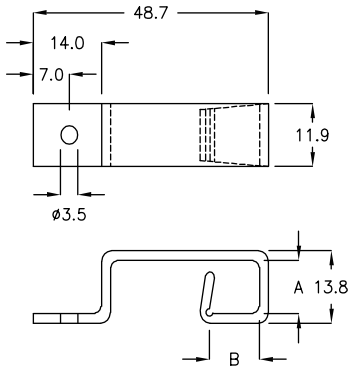

固定座 EDGE CONNECT BASE 6-135-1

- MATERIAL: NYLON 66(UL)
- FLAME CLASS: 94V-0/94V-2
- COLOR: NATURAL

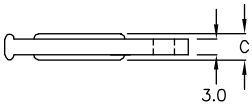

PART NO	A	B	C	PACKAGE
PDB-01	38.0	10.0	5.0	500

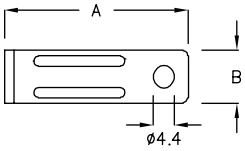

电线固定扣 CABLE CLAMP 6-135-2

- MATERIAL: NYLON 66(UL)
- FLAME CLASS: 94V-0/94V-2
- COLOR: NATURAL

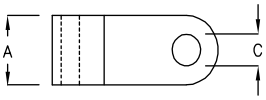

PART NO	A	B	C	D	PACKAGE
PC-01J	7.0	12.8	ø3.2	ø2.0	1000
PC-1RL	7.0	12.75	ø3.2	ø2.1	

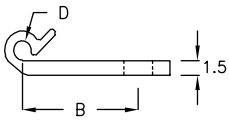

电线固定扣 CABLE CLAMP 6-135-3

- MATERIAL: NYLON 66(UL)
- FLAME CLASS: 94V-0/94V-2
- COLOR: NATURAL,BLACK

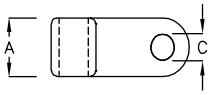

PART NO	A	B	C	D	PACKAGE
PCG-5A	10.0	19.0	ø4.6	ø5.4	500
PCG-5CK	10.0	26.0	ø5.4	ø5.4	
PCG-5NW	9.6	11.6	ø3.5	ø5.35	
PCG-7F	9.5	11.75	ø5.4	ø7.5	

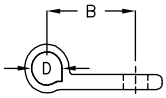

电线固定扣 CABLE CLAMP 6-135-4

- MATERIAL: NYLON 66(UL)
- FLAME CLASS: 94V-0/94V-2
- COLOR: NATURAL

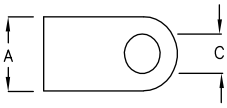

PART NO	A	B	C	CLOSE DIA	PACKAGE
PC-01D	6.6	6.7	ø3.5	ø2.7	2000
PC-1A	6.5	6.7	ø3.4	ø3.4	
PC-2A	8.5	11.4	ø4.4	ø5.0	1000
PC-02D	8.6	13.8	ø4.4	ø5.7	
PC-2Q	7.5	9.3	ø4.1	ø4.0	

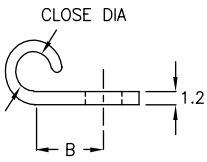

电线固定扣 CABLE CLAMP 6-135-5

- MATERIAL: NYLON 66(UL)
- FLAME CLASS: 94V-0/94V-2
- COLOR: NATURAL,BLACK

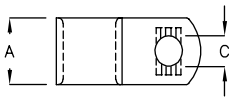

PART NO	A	B	C	D CLOSE DIA	PACKAGE
PC-09	9.5	12.2	ø4.4	ø7.5	500
PC-5HM	9.5	11.1	ø4.3	ø5.6	

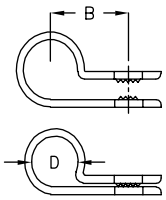

电线固定扣 CABLE CLAMP 6-136-1

- MATERIAL: NYLON 66(UL)
- FLAME CLASS: 94V-0/94V-2
- COLOR: NATURAL,BLACK

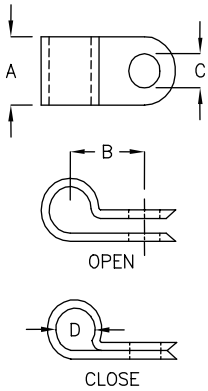

PART NO	A	B	C	D CLOSE DIA	PACKAGE
PC−1	13.5	9.0	ø5.4	ø3.6	1000
PC−1C	9.5	8.3	ø4.4	ø3.0	2000
PC−1K	6.3	9.0	ø3.1	ø3.5	
PC−1Q	6.5	9.5	ø3.1	ø3.0	
PC−1S	6.5	6.7	ø3.5	ø3.1	
PC−2	10.2	11.5	ø4.0	ø5.0	1000
PC−2H	9.7	11.7	ø4.1	ø4.5	
PC−2K	12.7	10.7	ø5.2	ø5.7	
PC−2L	9.6	12.1	ø5.0	ø7.3	
PC−2M	9.8	12.1	ø5.1	ø6.1	
PC−2S	9.8	12.0	ø5.1	ø6.9	
PC−3	10.0	11.9	ø4.3	ø5.6	500
PC−3K	9.0	11.35	ø3.5	ø5.7	
PC−3M	8.3	9.8	ø4.0	ø5.0	
PC−4	9.7	12.1	ø4.1	ø8.3	
PC−5	12.4	13.4	ø5.0	ø8.8	
PC−05C	9.5	12.0	ø3.2	ø8.3	
PC−5F	9.5	16.0	ø4.1	ø8.7	
PC−5GW	9.6	12.1	ø4.4	ø5.6	
PC−6	13.5	16.5	ø5.25	ø11.4	
PC−24MT	12.0	21.8	ø5.4	ø25.0	200

电线固定扣 CABLE CLAMP 6-136-2

- MATERIAL: NYLON 66(UL)
- FLAME CLASS: 94V-0/94V-2
- COLOR: NATURAL

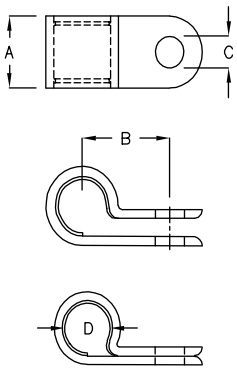

PART NO	A	B	C	D CLOSE DIA	PACKAGE
PC−3L	10.0	10.0	ø4.4	ø5.5	500
PC−03C	9.8	11.3	ø4.2	ø6.9	
PC−02C	9.8	12.0	ø4.2	ø7.7	
PC−6M	10.0	15.1	ø4.0	ø11.0	

电线固定扣 CABLE CLAMP 6-136-3

- MATERIAL: NYLON 66(UL)
- FLAME CLASS: 94V-0/94V-2
- COLOR: NATURAL,BLACK

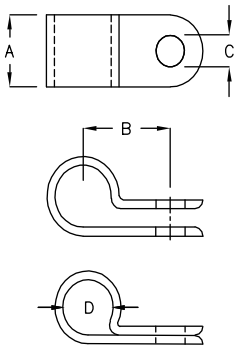

PART NO	A	B	C	D CLOSE DIA	PACKAGE
PC−3KF	9.0	11.35	ø3.5	ø5.7	500

电线固定扣 CABLE CLAMP 6-137-1

- MATERIAL: NYLON 66(UL)
- FLAME CLASS: 94V-0/94V-2
- COLOR: NATURAL

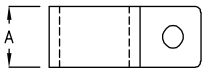

PART NO	A	B	C	PACKAGE
PL-1	10.0	13.4	ø4.0	500

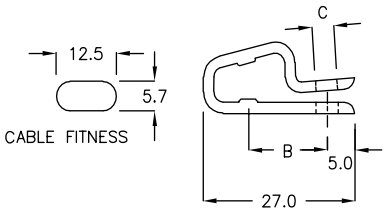

电线固定扣 CABLE CLAMP 6-137-2

- MATERIAL: NYLON 66(UL)
- FLAME CLASS: 94V-0/94V-2
- COLOR: NATURAL

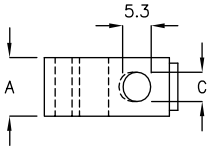

PART NO	A	B	C	PACKAGE
PL-01A	10.1	11.0	ø5.0	500

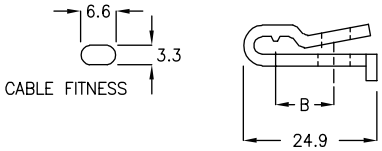

电线固定扣 CABLE CLAMP 6-137-3

- MATERIAL: NYLON 66(UL)
- FLAME CLASS: 94V-0/94V-2
- COLOR: NATURAL

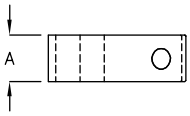

PART NO	A	B	C	PACKAGE
PL-3	10.0	16.15	ø4.5	500

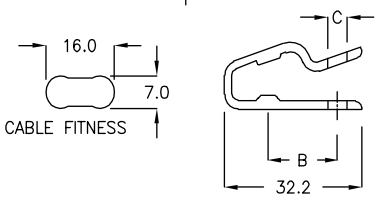

电线固定扣 CABLE CLAMP 6-137-4

- MATERIAL: NYLON 66(UL)
- FLAME CLASS: 94V-0/94V-2
- COLOR: NATURAL

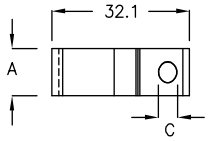

PART NO	A	B	C	PACKAGE
PL-04	10.0	17.0	ø4.5	500

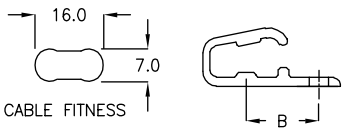

电线固定扣 CABLE CLAMP 6-137-5

- MATERIAL: NYLON 66(UL)
- FLAME CLASS: 94V-0/94V-2
- COLOR: BLACK

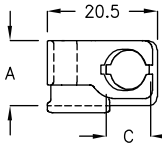

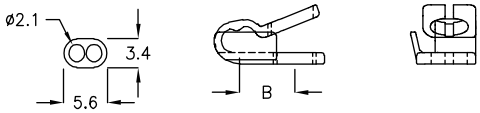

CABLE FITNESS

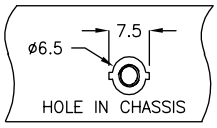

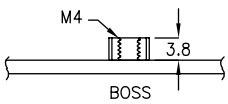

PART NO	A	B	C	PACKAGE
PLA-3F	11.0	9.8	8.0	500

电线固定扣 CABLE CLAMP 6-138-1

- MATERIAL: NYLON 66(UL)
- FLAME CLASS: 94V-0/94V-2
- COLOR: BLACK

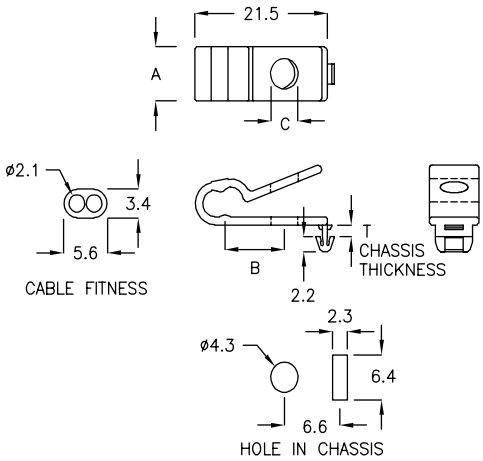

PART NO	A	B	C	T CHASSIS THICKNESS	PACKAGE
PLB-3Q	8.0	9.6	ø4.3	1.6	500

电线固定扣 CABLE CLAMP 6-138-2

- MATERIAL: NYLON 66(UL)
- FLAME CLASS: 94V-0/94V-2
- COLOR: BLACK

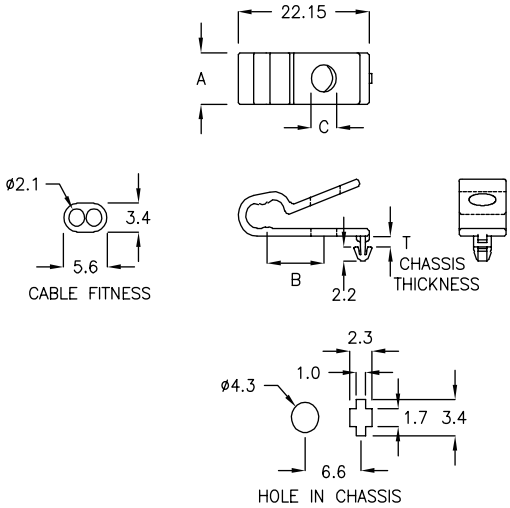

PART NO	A	B	C	T CHASSIS THICKNESS	PACKAG
PLB-3RM	8.0	9.6	ø4.3	1.1~1.4	500

电线固定扣 CABLE CLAMP 6-138-3

- MATERIAL: NYLON 66(UL)
- FLAME CLASS: 94V-0/94V-2
- COLOR: BLACK

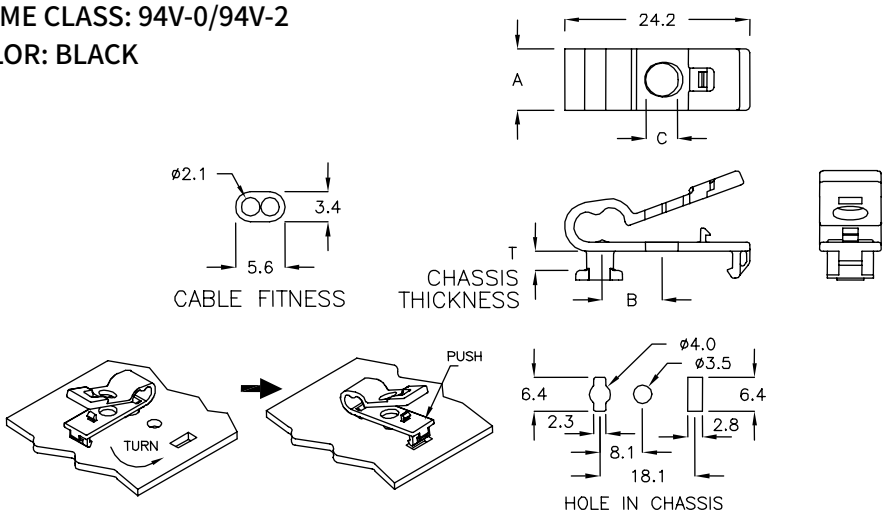

PART NO	A	B	C	T CHASSIS THICKNESS	PACKAGE
PLC-3KF	8.0	7.8	ø4.3	2.0	500

电线固定扣 WIRE MOUNT 6-139-1

- MATERIAL: NYLON 66(UL)
- FLAME CLASS: 94V-0/94V-2
- COLOR: NATURAL

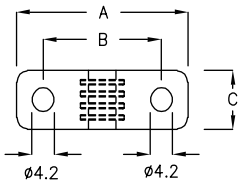

PART NO	A	B	C	PACKAGE
PCT–01	32.0	22.0	10.0	500

电线固定扣 WIRE MOUNT 6-139-2

- MATERIAL: NYLON 66(UL)
- FLAME CLASS: 94V-0/94V-2
- COLOR: BLACK

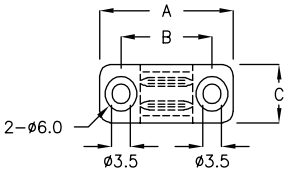

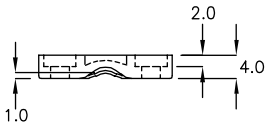

PART NO	A	B	C	PACKAGE
PCT–06	25.0	17.0	10.0	500

电线固定扣 WIRE MOUNT 6-139-3

- MATERIAL: NYLON 66(UL)
- FLAME CLASS: 94V-0/94V-2
- COLOR: BLACK

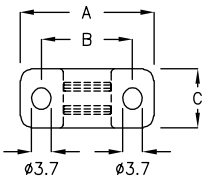

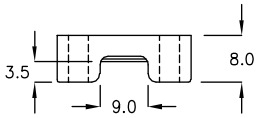

PART NO	A	B	C	PACKAGE
PCT–03	25.0	17.0	10.0	500

电线固定扣 WIRE MOUNT 6-139-4

- MATERIAL: NYLON 66(UL)
- FLAME CLASS: 94V-0/94V-2
- COLOR: BLACK

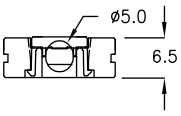

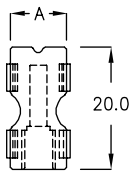

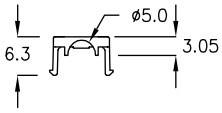

PART NO	A	PACKAGE
PCU–1A	10.0	500

ASSEMBLE WITH P.G PART PCW-01 (Page 6-140-1)

电线固定扣 WIRE MOUNT 6-140-1

- MATERIAL: NYLON 66(UL)
- FLAME CLASS: 94V-0/94V-2
- COLOR: BLACK

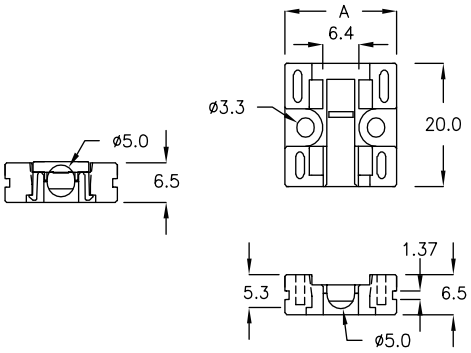

PART NO	A	PACKAGE
PCW-01	20.0	500

ASSEMBLE WITH P.G PART PCU-1A (Page 6-139-4)

排线固定座 FLAT CABLE MOUNT 6-140-2

- MATERIAL: NYLON 66(UL)
- FLAME CLASS: 94V-0/94V-2
- COLOR: BLACK
- ADHESIVE TAPE: 3M

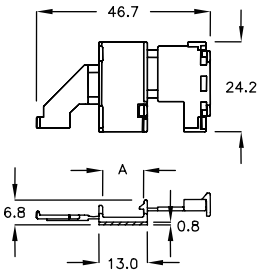

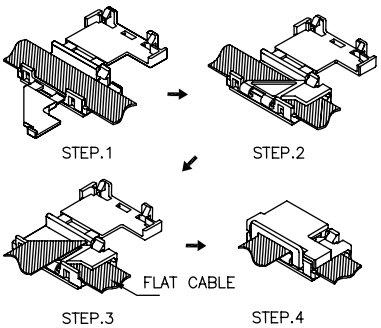

PART NO	A	PACKAGE
DFB-11	11.0	100

排线固定座 FLAT CABLE MOUNT 6-140-3

- MATERIAL: NYLON 66(UL)
- FLAME CLASS: 94V-0/94V-2
- COLOR: BLUE

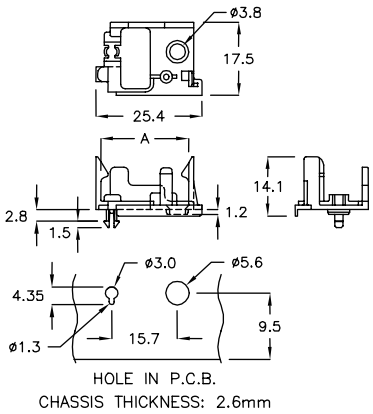

PART NO	A	PACKAGE
DFQ-21CA	21.0	500

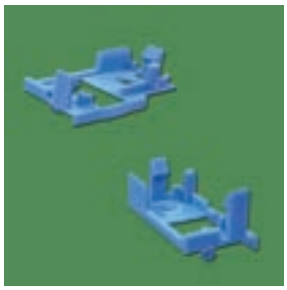

排线固定座 FLAT CABLE MOUNT 6-140-4

- MATERIAL: NYLON 66(UL)
- FLAME CLASS: 94V-0/94V-2
- COLOR: BLUE

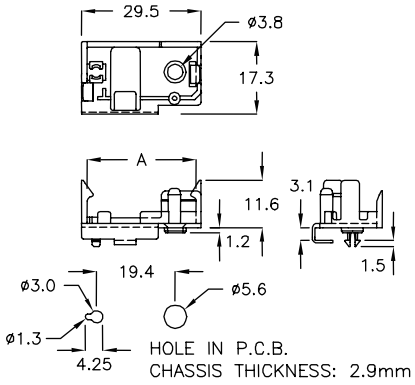

PART NO	A	PACKAGE
DFQ-27MJ	26.9	500

07

EMI扣
SLEEVE FERRITE CLAMP

EMI 扣 SLEEVE FERRITE CLAMP 7-2-1

- MATERIAL: NYLON 66(UL)
- FLAME CLASS: 94V-0/94V-2
- COLOR: BLACK

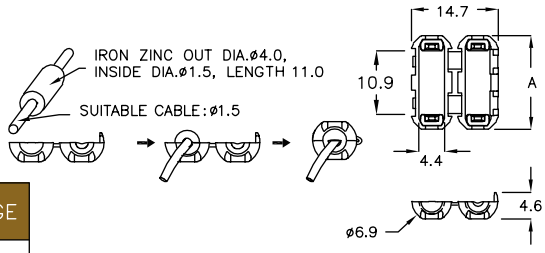

PART NO	A	SUITABLE CABLE	PACKAGE
EMR-1C	16.0	ø1.15	500

EMI 扣 SLEEVE FERRITE CLAMP 7-2-2

- MATERIAL: NYLON 66(UL)
- FLAME CLASS: 94V-0/94V-2
- COLOR: BLACK

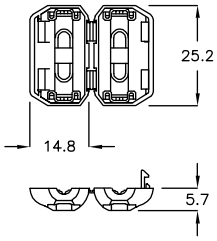

PART NO	SUITABLE CABLE	PACKAGE
EMR-3A	ø3.5	500

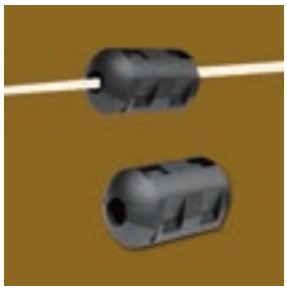

EMI 扣 SLEEVE FERRITE CLAMP 7-2-3

- MATERIAL: NYLON 66(UL)
- FLAME CLASS: 94V-0/94V-2
- COLOR: BLACK

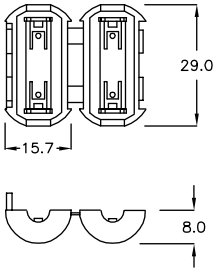

PART NO	SUITABLE CABLE	PACKAGE
EMR-05	ø5.0	200

EMI 扣 SLEEVE FERRITE CLAMP 7-2-4

- MATERIAL: NYLON 66(UL)
- FLAME CLASS: 94V-0/94V-2
- COLOR: BLACK

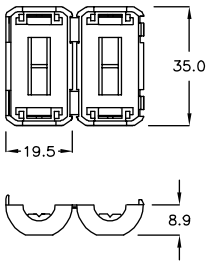

PART NO	SUITABLE CABLE	PACKAGE
EMR-7A	ø7.5	200

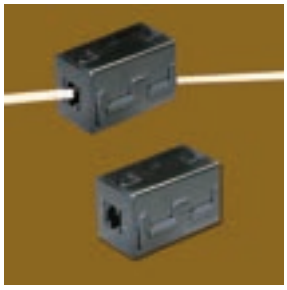

EMI 扣 SLEEVE FERRITE CLAMP 7-2-5

- MATERIAL: NYLON 66(UL)
- FLAME CLASS: 94V-0/94V-2
- COLOR: BLACK

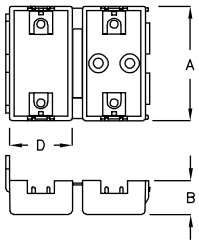

PART NO	A	B	D	SUITABLE CABLE	PACKAGE
EMQ-06	32.8	9.7	18.0	ø6.0	200
EMQ-13	32.7	15.0	30.0	ø13.0	100
EMQ-9A	32.8	11.6	22.7	ø8.5	

08

电子零附件

PCB,ELECTRONIC ASSEMBLY COMPONENTS:

WASHER

TRANSISTOR WASHER

SILICONE RUBBER

返回图片索引

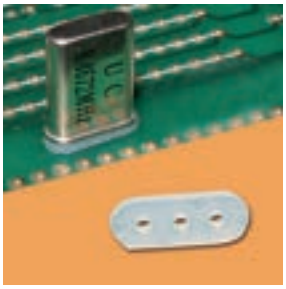

振荡晶体垫片 OSCILLATOR WASHER 8-2-1

- MATERIAL: NYLON 66(UL)
- FLAME CLASS: 94V-0/94V-2
- COLOR: NATURAL

PART NO	A	B	C	PACKAGE
TQ-05	10.8	4.5	1.0	2000

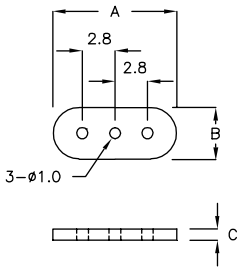

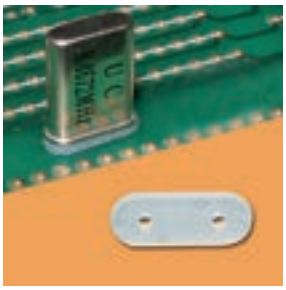

振荡晶体垫片 OSCILLATOR WASHER 8-2-2

- MATERIAL: NYLON 66(UL)
- FLAME CLASS: 94V-0/94V-2
- COLOR: NATURAL

PART NO	A	B	C	D	E	PACKAGE
TQ-03	7.9	3.2	0.7	3.75	0.8	2000
TQ-03A	7.9	3.2	0.7	4.9	0.8	
TQ-06	11.2	5.0	1.0	4.9	1.2	
TQ-06A	11.2	5.0	1.5	4.9	1.2	
TQ-06H	11.2	6.5	1.5	4.75	2.2	

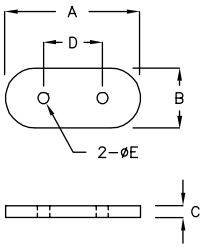

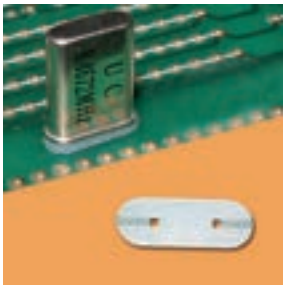

振荡晶体垫片 OSCILLATOR WASHER 8-2-3

- MATERIAL: NYLON 66(UL)
- FLAME CLASS: 94V-0/94V-2
- COLOR: NATURAL

PART NO	A	B	C	PACKAGE
TQ-06F	11.0	4.5	0.7	2000

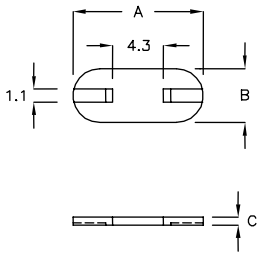

振荡晶体垫片 OSCILLATOR WASHER 8-2-4

- MATERIAL: CERAMICS
- COLOR: NATURAL

PART NO	A	B	C	PACKAGE
TQC-05	10.0	5.0	5.1	2000

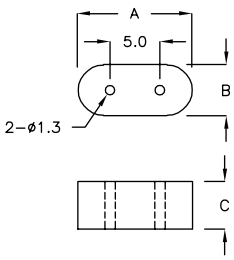

电容器座 E-CAP HOUSING 8-2-5

- MATERIAL: NYLON 66(UL)
- FLAME CLASS: 94V-0/94V-2
- COLOR: NATURAL

PART NO	A	B	C	PACKAGE
CWX-10BK	ø11.0	ø10.0	10.0	1000

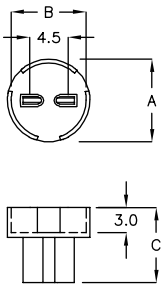

电容器座 E-CAP HOUSING 8-3-1

- MATERIAL: PP
- COLOR: NATURAL

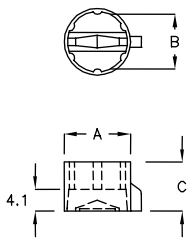

PART NO	A	B	C	PACKAGE
CW-2	ø12.5	ø10.2	9.2	1000

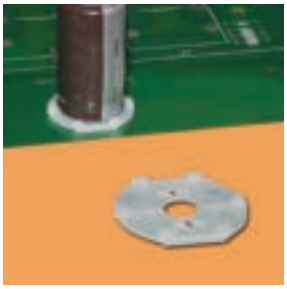

电容器垫片 CAPACITOR WASHER 8-3-2

- MATERIAL: NYLON 66(UL)
- FLAME CLASS: 94V-0/94V-2
- COLOR: NATURAL

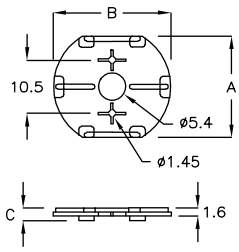

PART NO	A	B	C	PACKAGE
CW-10	20.0	ø23.0	2.6	1000

电容器垫片 CAPACITOR WASHER 8-3-3

- MATERIAL: NYLON 66(UL)
- FLAME CLASS: 94V-0/94V-2
- COLOR: NATURAL

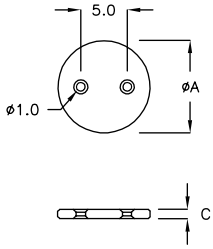

PART NO	A	C	PACKAGE
CW-1CQ	ø10.0	1.0	1000

电容器垫片 CAPACITOR WASHER 8-3-4

- MATERIAL: NYLON 66+GF30%(UL)
- FLAME CLASS: 94V-0
- COLOR: BLACK

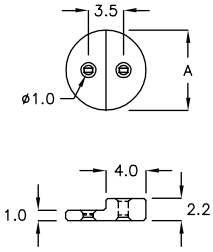

PART NO	A	PACKAGE
CW-2KM	ø8.0	1000

电容器座 E-CAP HOUSING 8-4-1

- MATERIAL: NYLON 66(UL)
- FLAME CLASS: 94V-0/94V-2
- COLOR: NATURAL

PART NO	A	C	PACKAGE
CW-003	ø16.0	16.0	1000

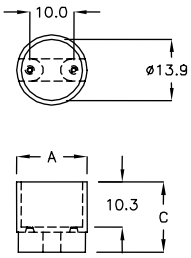

电容器座 E-CAP HOUSING 8-4-2

- MATERIAL: NYLON 66(UL)
- FLAME CLASS: 94V-0/94V-2
- COLOR: BLACK

PART NO	A	B	PACKAGE
CWZ-7Q	ø7.9	5.5	2000

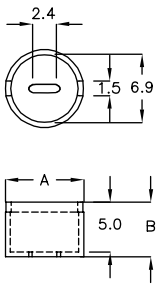

电容器座 E-CAP HOUSING 8-4-3

- MATERIAL: NYLON 66(UL)
- FLAME CLASS: 94V-0/94V-2
- COLOR: BLACK

PART NO	A	B	C	PACKAGE
CWM-07	ø10.0	5.0	7.0	1000

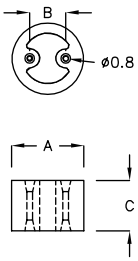

华司 WASHER 8-4-4

- MATERIAL: NYLON 66(UL)
- FLAME CLASS: 94V-0/94V-2
- COLOR: NATURAL

PART NO	A	C	PACKAGE
WWD-3K	ø17.2	3.0	2000

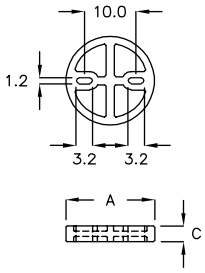

电容器垫片 E-CAP WASHER 8-4-5

- MATERIAL: NYLON 66(UL)
- FLAME CLASS: 94V-0/94V-2
- COLOR: NATURAL

PART NO	A	C	PACKAGE
CWQ-13M	ø13.5	3.1	1000

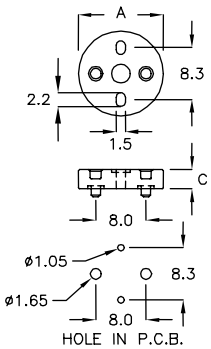

电容器垫片 E-CAP WASHER 8-5-1

- MATERIAL: NYLON 66(UL)
- FLAME CLASS: 94V-0/94V-2
- COLOR: NATURAL

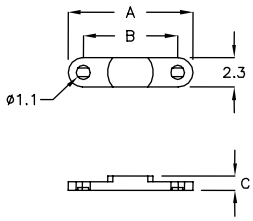

PART NO	A	B	C	PACKAGE
CWF−7H	9.9	7.5	1.1	2000

电容器垫片 E-CAP WASHER 8-5-2

- MATERIAL: NYLON 66(UL)
- FLAME CLASS: 94V-0/94V-2
- COLOR: NATURAL

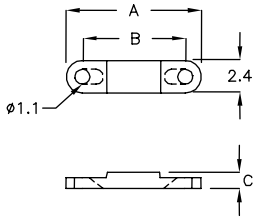

PART NO	A	B	C	PACKAGE
CWF−7K	10.0	7.6	1.2	2000

电容器垫片 E-CAP WASHER 8-5-3

- MATERIAL: NYLON 66(UL)
- FLAME CLASS: 94V-0/94V-2
- COLOR: NATURAL

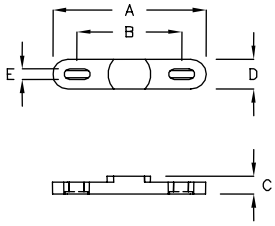

PART NO	A	B	C	D	E	PACKAGE
CWF−8H	12.8	8.75	1.5	2.5	0.9	2000
CWF−14A	14.2	10.0	1.5	3.0	1.5	

固定座 BUZZER MOUNT 8-5-4

- MATERIAL: NYLON 66+30%FRP(UL)
- FLAME CLASS: 94V-0
- COLOR: BLACK

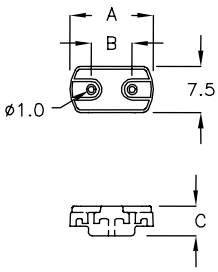

PART NO	A	B	C	PACKAGE
MTZ−4A	13.4	6.6	4.8	1000

固定座 MOUNT 8-5-5

- MATERIAL: NYLON 66(UL)
- FLAME CLASS: 94V-0/94V-2
- COLOR: BLACK

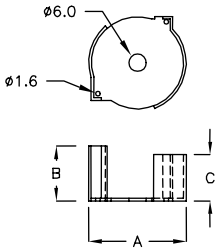

PART NO	A	B	C	PACKAGE
QDC−01	33.6	18.9	15.9	100

电容器座 E-CAP HOUSING 8-6-1

- MATERIAL: NYLON 66(UL)
- FLAME CLASS: 94V-0/94V-2
- COLOR: NATURAL

PART NO	A	B	PACKAGE
MMH-08	8.0	6.0	1000

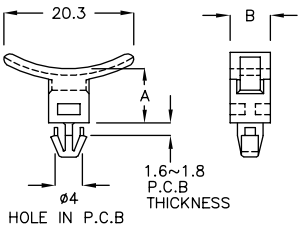

电容器座 E-CAP HOUSING 8-6-2

- MATERIAL: NYLON 46(UL)
- FLAME CLASS: 94V-0/94V-2
- COLOR: NATURAL

PART NO	A	B	C	PACKAGE
CWB-01	17.8	22.0	8.0	200

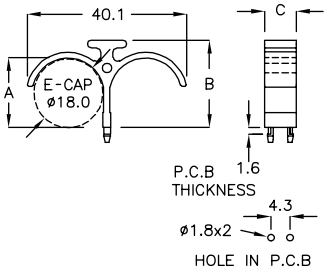

电容器座 E-CAP HOUSING 8-6-3

- MATERIAL: NYLON 66(UL)
- FLAME CLASS: 94V-0/94V-2
- COLOR: NATURAL

PART NO	A	B	PACKAGE
CWC-08	8.0	19.7	1000

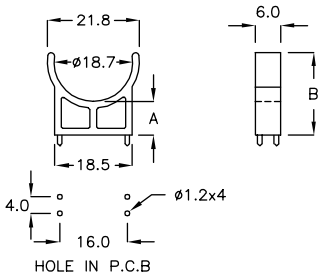

电容器座 E-CAP HOUSING 8-6-4

- MATERIAL: NYLON 66(UL)
- FLAME CLASS: 94V-0/94V-2
- COLOR: NATURAL
- ADHESIVE TAPE: 3M

PART NO	A	PACKAGE
CWG-4A	4.3	1000

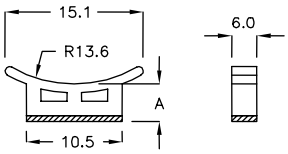

电容器座 E-CAP HOUSING 8-6-5

- MATERIAL: NYLON 66(UL)
- FLAME CLASS: 94V-0/94V-2
- COLOR: NATURAL
- ADHESIVE TAPE: 3M

PART NO	A	B	C	D	PACKAGE
CWG-03	3.0	6.0	10.5	15.1	1000
CWG-3MF	3.0	5.0	10.0	15.1	
CWG-3TG	3.0	6.0	10.5	12.0	

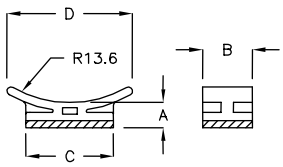

电容器座 E-CAP HOUSING 8-7-1

- MATERIAL: NYLON 66(UL)
- FLAME CLASS: 94V-0/94V-2
- COLOR: NATURAL

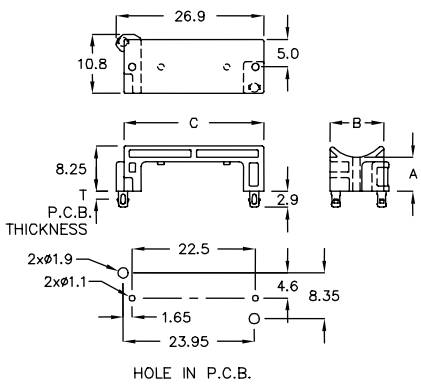

PART NO	A	B	C	T P.C.B. THICKNESS	PACKAGE
CWFK-27A	6.22	9.85	25.5	1.2	500

电容器座 E-CAP HOUSING 8-7-2

- MATERIAL: NYLON 66(UL)
- FLAME CLASS: 94V-0/94V-2
- COLOR: NATURAL
- WITH M2x5 TAPPING SCREW

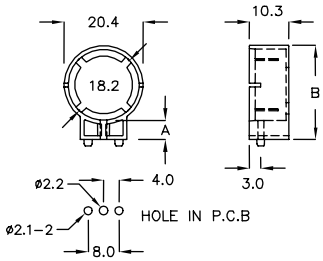

PART NO	A	B	PACKAGE
CWS-01	5.0	24.4	500

电容器座 E-CAP HOUSING 8-7-3

- MATERIAL: NYLON 66(UL)
- FLAME CLASS: 94V-0/94V-2
- COLOR: NATURAL
- ADHESIVE TAPE: 3M

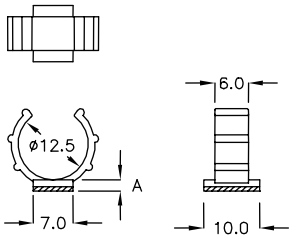

PART NO	A	PACKAGE
CWH-02	2.0	1000

电容器座 E-CAP HOUSING 8-7-4

- MATERIAL: NYLON 66(UL)
- FLAME CLASS: 94V-0/94V-2
- COLOR: BLACK

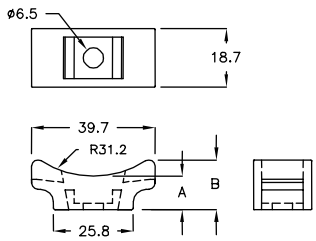

PART NO	A	B	PACKAGE
MLA-40	10.8	16.0	100

电容器座 E-CAP HOUSING 8-7-5

- MATERIAL: NYLON 66(UL)
- FLAME CLASS: 94V-0/94V-2
- COLOR: NATURAL

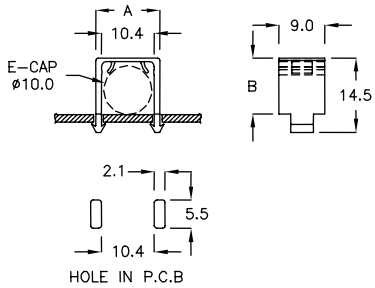

PART NO	A	B	PACKAGE
CWD-01	12.6	10.8	1000

电容器座 E-CAP HOUSING 8-8-1

- MATERIAL: NYLON 66(UL)
- FLAME CLASS: 94V-0/94V-2
- COLOR: NATURAL

PART NO	A	B	PACKAGE
CWD-02	25.2	10.9	500

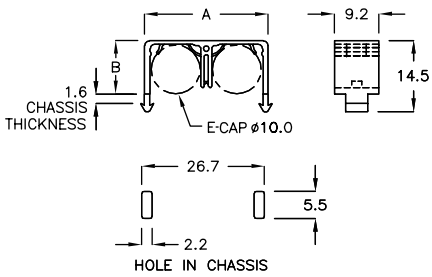

电容器座 E-CAP HOUSING 8-8-2

- MATERIAL: NYLON 66(UL)
- FLAME CLASS: 94V-0/94V-2
- COLOR: NATURAL

PART NO	A	B	PACKAGE
CWD-16	38.0	15.3	200

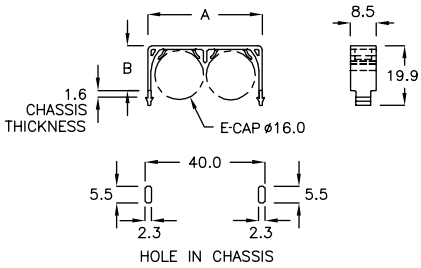

电容器座 E-CAP HOUSING 8-8-3

- MATERIAL: NYLON 66(UL)
- FLAME CLASS: 94V-0/94V-2
- COLOR: NATURAL

PART NO	A	B	PACKAGE
CWL-19	18.0	18.4	500

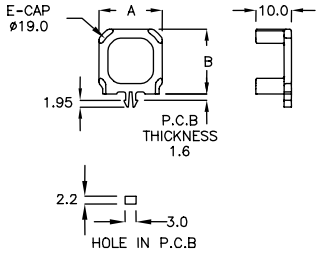

电容器座 E-CAP HOUSING 8-8-4

- MATERIAL: NYLON 66(UL)
- FLAME CLASS: 94V-0/94V-2
- COLOR: NATURAL

PART NO	A	B	C	PACKAGE
CWJ-01	17.0	22.0	7.0	500

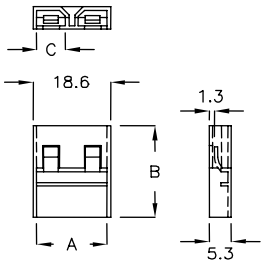

电容器帽套 E-CAP TUBE 8-8-5

- MATERIAL: NYLON 66(UL)
- FLAME CLASS: 94V-0/94V-2
- COLOR: NATURAL

	PART NO	A	B	C	PACKAGE
★	CWT-16K	ø16.5	30.5	ø17.5	500
	CWT-18A	ø18.6	10.0	ø18.6	100

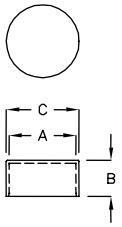

电容器帽套 E-CAP TUBE 8-9-1

- MATERIAL: NYLON 66(UL)
- FLAME CLASS: 94V-0/94V-2
- COLOR: NATURAL

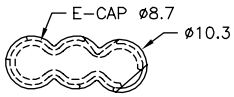

PART NO	A	B	PACKAGE
DXM-27H	27.45	9.3	500

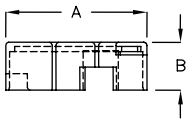

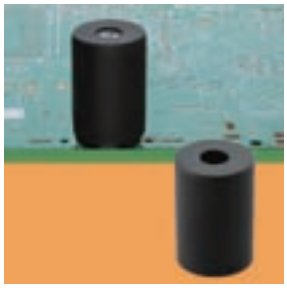

电容器帽套 E-CAP TUBE 8-9-2

- MATERIAL: NYLON 66(UL)
- FLAME CLASS: 94V-0/94V-2
- COLOR: BLACK

NEW

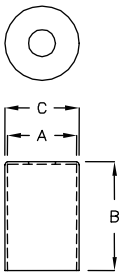

	PART NO	A	B	C	SUITABLE E-CAP	PACKAGE
★	DXJ-20NC	ø12.8	20.0	ø13.7	ø11.8~ø12.3	500

电容器帽套 E-CAP TUBE 8-9-3

- MATERIAL: PP(UL)
- FLAME CLASS: 94V-0/94V-2
- COLOR: BLACK

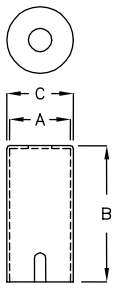

PART NO	A	B	C	SUITABLE E-CAP	PACKAGE
DXA-31JK	ø10.5	27.5	ø11.5	ø9.5~ø10.2	500
DXA-50F	ø13.0	50.8	ø14.5	ø12.0~ø12.5	

电容器帽套 E-CAP TUBE 8-9-4

- MATERIAL: PP(UL)
- FLAME CLASS: 94V-0/94V-2
- COLOR: BLACK

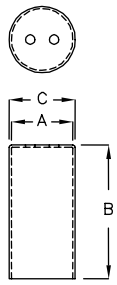

PART NO	A	B	C	SUITABLE E-CAP	PACKAGE
DXK-30C	ø13.0	30.5	ø14.0	ø12.0~ø12.5	500

电容器帽套 E-CAP TUBE 8-9-5

- MATERIAL: NYLON 66(UL)
- FLAME CLASS: 94V-0/94V-2
- COLOR: BLACK

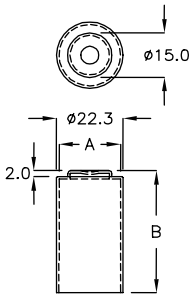

PART NO	A	B	PACKAGE
CWY-50	ø20.5	40.9	100

返回图片索引

电容器帽套 E-CAP TUBE 8-10-1

- COLOR: BLACK

PART NO	MATERIAL	A	B	C	SUITABLE E-CAP	PACKAGE
DXA-16RC	PP V0	ø12.5	16.0	ø13.6	ø11.0~ø12.0	500
DXA-20KS	N66 V2	ø24.0	20.0	ø25.0	ø23.5~ø24.5	

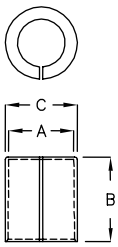

电容器帽套 E-CAP TUBE 8-10-2

- MATERIAL: PP(UL)
- FLAME CLASS: 94V-0
- COLOR: BLACK

PART NO	A	B	C	SUITABLE E-CAP	PACKAGE
DXP-28CA	ø31.0	28.0	ø32.0	ø29.5~ø30.5	500

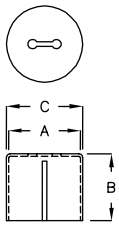

电容器帽套 E-CAP TUBE 8-10-3

- MATERIAL: PP(UL)
- FLAME CLASS: 94V-0
- COLOR: BLACK,NATURAL

	PART NO	A	B	C	SUITABLE E-CAP	PACKAGE
★	DXP-20TC	ø25.6	20.0	ø26.6	ø24.0~ø25.0	100
★	DXP-20KF	ø26.6	20.0	ø27.6	ø25.0~ø26.0	
	DXP-46FM	ø31.5	46.5	ø32.9	ø30.0~ø31.0	486

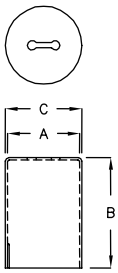

电容器帽套 E-CAP TUBE 8-10-4

- MATERIAL: NYLON 66(UL)
- FLAME CLASS: 94V-0/94V-2
- COLOR: BLACK

PART NO	A	B	C	SUITABLE E-CAP	PACKAGE
DXA-41	ø30.0	41.0	ø31.0	ø29.2~ø31.2	486

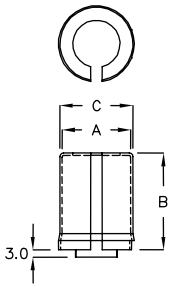

电容器帽套 E-CAP TUBE 8-10-5

- MATERIAL: NYLON 66(UL)
- FLAME CLASS: 94V-0/94V-2
- COLOR: BLACK

PART NO	A	B	C	SUITABLE E-CAP	PACKAGE
DXA-51C	ø30.0	51.0	ø31.0	ø29.7~ø31.7	405

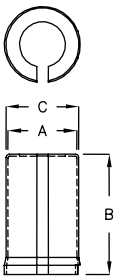

返回图片索引

电容器帽套 E-CAP TUBE 8-11-1

- MATERIAL: PP(UL)
- FLAME CLASS: 94V-0
- COLOR: BLACK

PART NO	A	B	C	SUITABLE E-CAP	PACKAGE
DXA–51FL	ø30.0	51.0	ø31.6	ø29.7~ø31.7	405

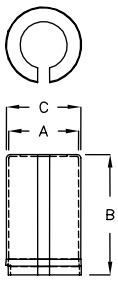

电容器帽套 E-CAP TUBE 8-11-2

- MATERIAL: PP(UL)
- FLAME CLASS: 94V-0
- COLOR: BLACK

PART NO	A	B	C	SUITABLE E-CAP	PACKAGE
DXA–55KT	ø30.0	55.5	ø31.6	ø29.7~ø31.7	405

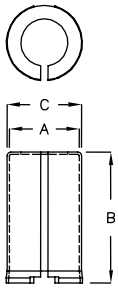

电容器帽套 E-CAP TUBE 8-11-3

- MATERIAL: PP(UL)
- FLAME CLASS: 94V-0
- COLOR: BLACK

PART NO	A	B	C	SUITABLE E-CAP	PACKAGE
DXA–65BH	ø30.0	65.0	ø31.6	ø29.5~ø31.0	324

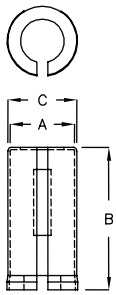

电容器帽套 E-CAP TUBE 8-11-4

- MATERIAL: PP(UL)
- FLAME CLASS: 94V-0
- COLOR: BLACK

PART NO	A	B	C	SUITABLE E -CAP	PACKAGE
DXS–49K	ø31.0	49.0	ø32.0	ø29.5~ø30.5	500

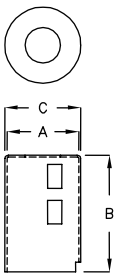

电容器帽套 E-CAP TUBE 8-11-5

- MATERIAL: PP(UL)
- FLAME CLASS: 94V-0
- COLOR: NATURAL

PART NO	A	B	C	SUITABLE E CAP	PACKAGE
DXF–76	ø31.0	75.8	ø32.0	ø29.5~ø30.5	243

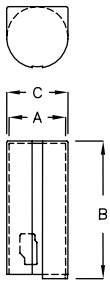

电容器帽套 E-CAP TUBE 8-12-1

- MATERIAL: PP(UL)
- FLAME CLASS: 94V-0
- COLOR: BLACK

PART NO	A	B	C	SUITABLE E CAP	PACKAGE
DXC−58AS	ø31.0	58.0	ø32.0	ø29.0~ø31.0	324

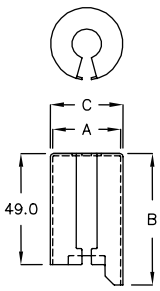

电容器帽套 E-CAP TUBE 8-12-2

- MATERIAL: NYLON 66(UL)
- FLAME CLASS: 94V-0/94V-2
- COLOR: BLACK

PART NO	A	B	SUITABLE E-CAP	PACKAGE
DXH−31M	18.4	31.0	ø17.2~ø18.0	200

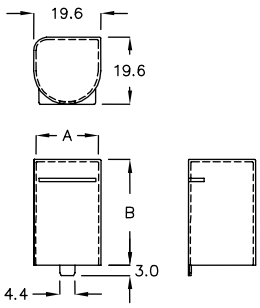

电容器座 E-CAP HOUSING 8-12-3

- MATERIAL: NYLON 66(UL)
- FLAME CLASS: 94V-0/94V-2
- COLOR: BLACK

PART NO	A	B	PACKAGE
CWQ−01	15.25	21.1	500

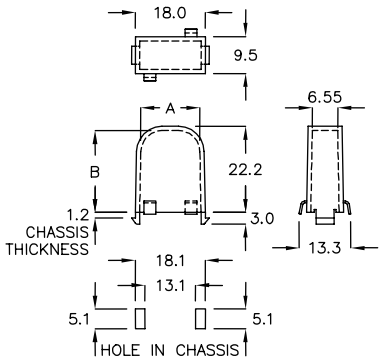

电感固定座 C. T. MOUNT 8-12-4

- MATERIAL: NYLON 66(UL)
- FLAME CLASS: 94V-0/94V-2
- COLOR: BLACK

PART NO	A	B	C	PACKAGE
CWP−01	18.4	10.65	12.0	500

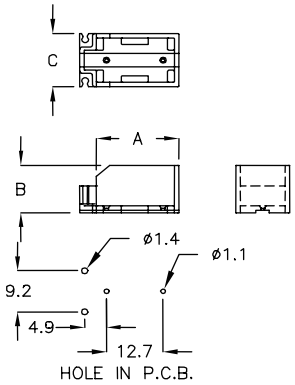

电感固定座 INDUCTOR HOUSING 8-12-5

- MATERIAL: PBT(UL)
- FLAME CLASS: 94V-0
- COLOR: NATURAL

PART NO	A	B	C	PACKAGE
CW−1A	23.3	12.0	20.0	1000

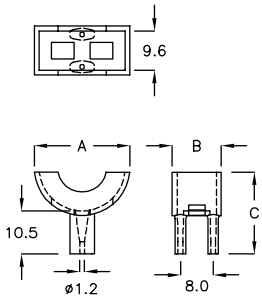

返回图片索引

电感固定座 INDUCTOR HOUSING 8-13-1

- MATERIAL: NYLON 66(UL)
- FLAME CLASS: 94V-0/94V-2
- COLOR: NATURAL

PART NO	A	B	C	PACKAGE
CW-005	10.4	9.5	7.6	2000

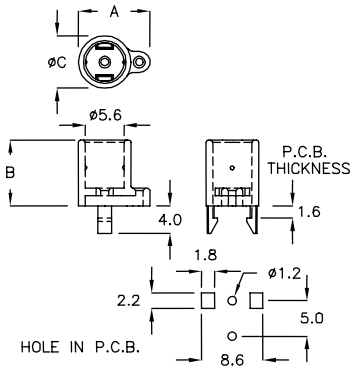

电容器帽套 E-CAP TUBE 8-13-2

- MATERIAL: NYLON 66(UL)
- FLAME CLASS: 94V-0/94V-2
- COLOR: BLACK

NEW

	PART NO	A	PACKAGE
★	DXZA-35C	35.6	100

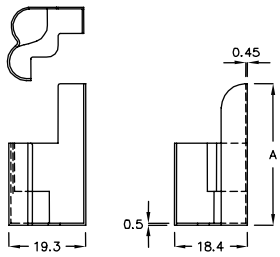

电容器帽套 E-CAP TUBE 8-13-3

- MATERIAL: NYLON 66(UL)
- FLAME CLASS: 94V-0/94V-2
- COLOR: BLACK

NEW

	PART NO	A	PACKAGE
★	DXZB-23C	21.0	1000

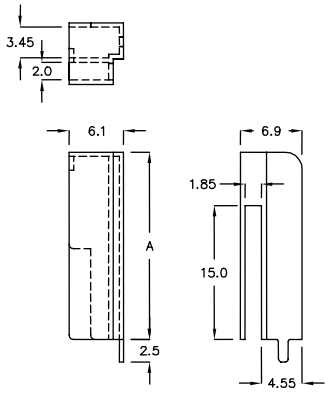

电容器帽套 E-CAP TUBE 8-13-4

- MATERIAL: NYLON 66(UL)
- FLAME CLASS: 94V-0/94V-2
- COLOR: BLACK

NEW

	PART NO	A	PACKAGE
★	DXZC-24C	24.5	100

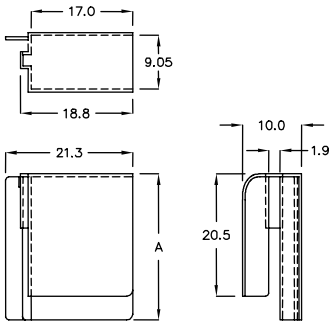

热敏电阻座 PTC MOUNT 8-13-5

- MATERIAL: NYLON 66(UL)
- FLAME CLASS: 94V-0/94V-2
- COLOR: NATURAL

PART NO	A	B	PACKAGE
PTC-2K	12.3	11.0	1000
PTC-05	12.3	14.0	

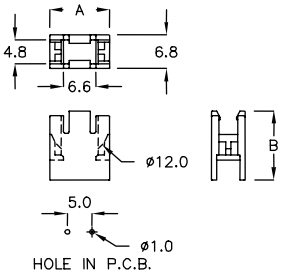

热敏电阻座 NTC HOLDER 8-14-1

- MATERIAL: NYLON 66(UL)
- FLAME CLASS: 94V-0/94V-2
- COLOR: BLACK

PART NO	A	B	PACKAGE
HUG-6A	2.5	6.5	2000

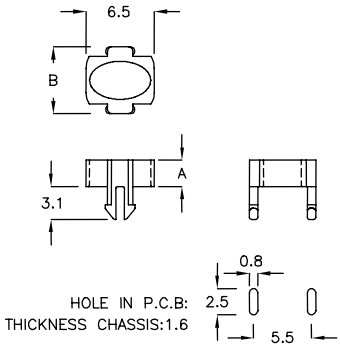

热敏电阻座 NTC HOLDER 8-14-2

- MATERIAL: NYLON 66(UL)
- FLAME CLASS: 94V-0/94V-2
- COLOR: NATURAL

PART NO	A	B	C	PACKAGE
HU-1	16.2	5.3	9.9	1000

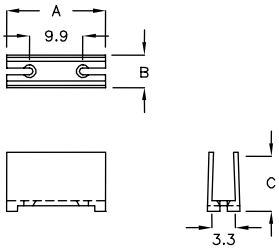

热敏电阻座 NTC HOLDER 8-14-3

- MATERIAL: NYLON 66(UL)
- FLAME CLASS: 94V-0/94V-2
- COLOR: NATURAL

PART NO	A	B	C	PACKAGE
HU-1PS	15.0	5.3	9.9	1000

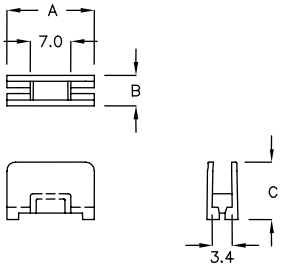

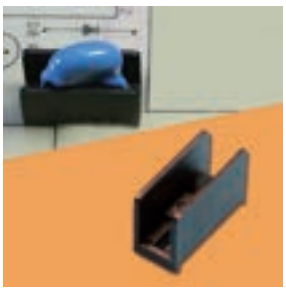

热敏电阻座 NTC HOLDER 8-14-4

- MATERIAL: PPS(UL)
- FLAME CLASS: 94V-0
- COLOR: BLACK

PART NO	A	B	C	PACKAGE
HU-1C	16.0	6.8	9.9	1000

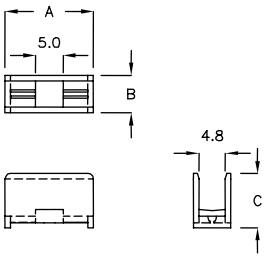

热敏电阻座 NTC HOLDER 8-14-5

- MATERIAL: NYLON 66(UL)
- FLAME CLASS: 94V-0/94V-2
- COLOR: NATURAL

PART NO	A	B	C	PACKAGE
HU-1A	16.2	8.3	13.9	500

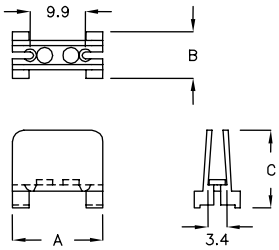

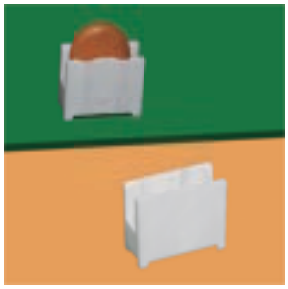

热敏电阻座 NTC HOLDER 8-15-1

- MATERIAL: PBT(UL)
- FLAME CLASS: 94V-0
- COLOR: NATURAL

PART NO	A	B	C	PACKAGE
HU-3	17.2	7.7	13.1	500

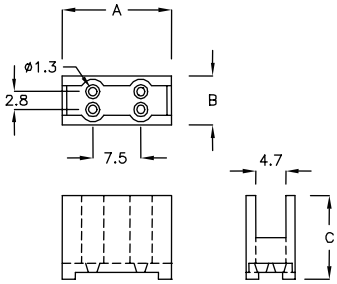

热敏电阻座 NTC HOLDER 8-15-2

- MATERIAL: PPS(UL)
- FLAME CLASS: 94V-0
- COLOR: BLACK

PART NO	A	B	C	PACKAGE
HU-4	12.6	6.8	14.1	500

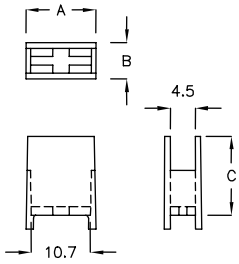

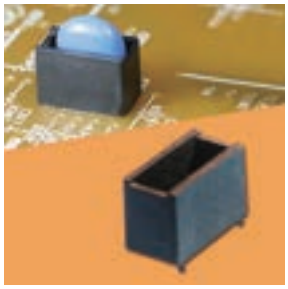

热敏电阻座 NTC HOLDER 8-15-3

- MATERIAL: PPS(UL)
- FLAME CLASS: 94V-0
- COLOR: BLACK

PART NO	A	B	C	PACKAGE
HU-4A	12.7	6.8	8.5	500

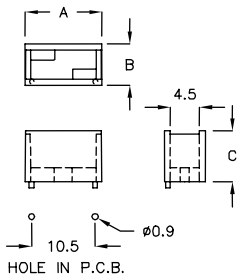

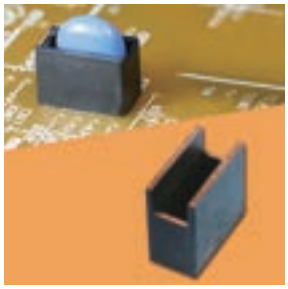

热敏电阻座 NTC HOLDER 8-15-4

- MATERIAL: PPS(UL)
- FLAME CLASS: 94V-0
- COLOR: BLACK

PART NO	A	B	C	PACKAGE
HU-4C	12.7	6.8	12.0	500

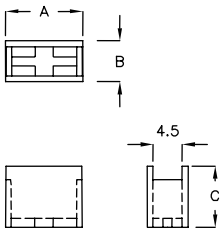

热敏电阻座 NTC HOLDER 8-15-5

- MATERIAL: PPS(UL)
- FLAME CLASS: 94V-0
- COLOR: BLACK

PART NO	A	B	C	PACKAGE
HU-4TX	12.7	6.8	8.5	500

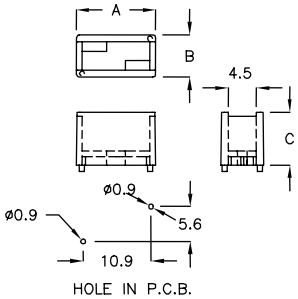

热敏电阻座 NTC HOLDER 8-16-1

- MATERIAL: PPS(UL)
- FLAME CLASS: 94V-0
- COLOR: BLACK

PART NO	A	B	C	PACKAGE
HUX-4K	12.7	6.8	8.4	500

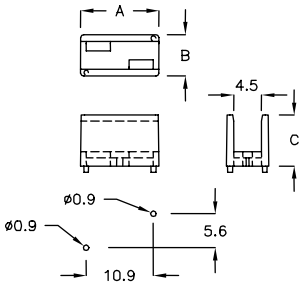

电容器座 CAPACITOR HOUSING 8-16-2

- MATERIAL: NYLON 66(UL)
- FLAME CLASS: 94V-0/94V-2
- COLOR: NATURAL

PART NO	A	B	C	D	PACKAGE
CWA-4A	16.7	7.9	10.0	6.5	200
CWA-4C	16.7	7.2	10.0	5.2	
CWA-4KH	16.7	7.9	10.0	5.9	

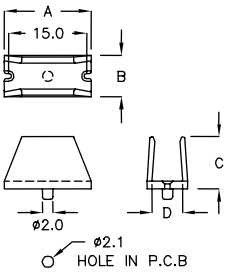

电容器座 CAPACITOR HOUSING 8-16-3

- MATERIAL: NYLON 66(UL)
- FLAME CLASS: 94V-0/94V-2
- COLOR: NATURAL

PART NO	A	C	D	PACKAGE
CWA-10	20.0	13.0	10.0	100

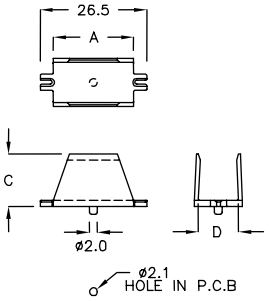

电容器座 CAPACITOR HOUSING 8-16-4

- MATERIAL: NYLON 66(UL)
- FLAME CLASS:94V-0/94V-2
- COLOR: NATURAL

PART NO	A	B	C	D	E	PACKAGE
CWR-2C	17.5	9.2	12.5	7.6	10.0	200
CWR-26SK	26.3	11.7	10.0	10.2	21.7	

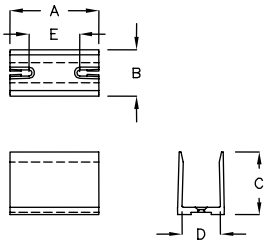

热敏电阻座 NTC HOLDER 8-16-5

- MATERIAL: NYLON 66(UL)
- FLAME CLASS: 94V-0/94V-2
- COLOR: NATURAL

PART NO	A	B	C	PACKAGE
CWA-4F	12.0	6.5	12.0	500

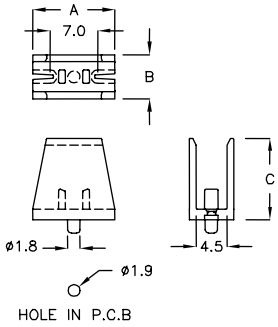

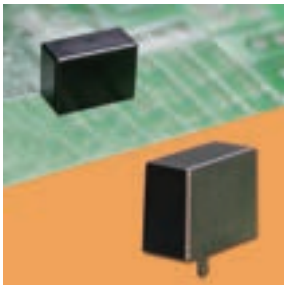

电容器座 E-CAP HOUSING 8-17-1

- MATERIAL: NYLON 66(UL)
- FLAME CLASS: 94V-0/94V-2
- COLOR: BLACK

PART NO	A	B	PACKAGE
CWW−19H	18.5	7.5	500

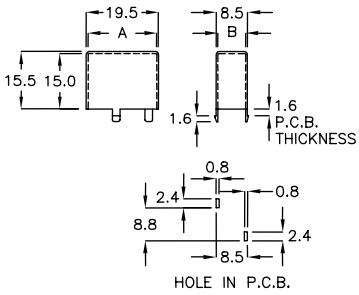

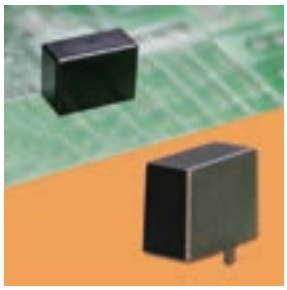

电容器座 E-CAP HOUSING 8-17-2

- MATERIAL: NYLON 66(UL)
- FLAME CLASS: 94V-0/94V-2
- COLOR: BLACK

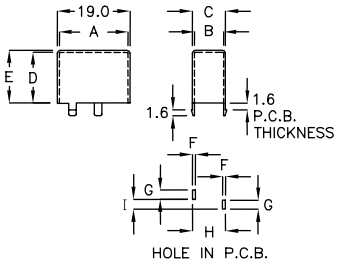

PART NO	A	B	C	D	E	F	G	H	I	PACKAGE
CWW−19PJ	18.0	7.7	8.7	13.3	13.8	0.8	2.4	8.7	2.2	500
CWW−19AN	18.0	16.0	17.0	16.0	16.5	1.15	1.9	17.0	9.0	

固定座 MOUNT 8-17-3

- MATERIAL: PPS(UL)
- FLAME CLASS: 94V-0
- COLOR: BLACK

PART NO	A	B	FORM	PACKAGE
MNS−26DT	26.0	13.1	1	500
MNS−26KH	26.0	10.0	2	

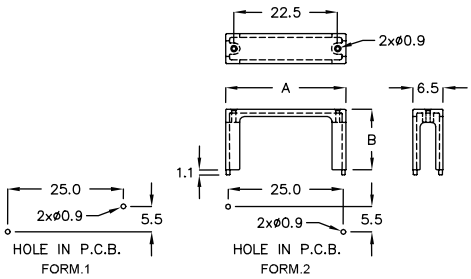

电容绝缘片 E-CAP INSULATING STRIP 8-17-4

- MATERIAL: PP
- FLAME CLASS: 94V-0
- COLOR: BLACK

PART NO	A	C	D	PACKAGE
CWU−36	30.0	36.0	27.5	675

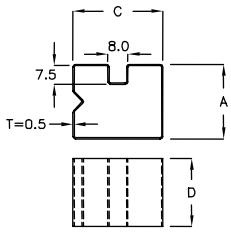

热敏电阻座 NTC HOLDER 8-17-5

- MATERIAL: PBT(UL)
- FLAME CLASS: 94V-0
- COLOR: NATURAL

PART NO	A	B	C	D	E	PACKAGE
HU−5	20.0	7.4	20.0	4.6	7.5	500
HU−008	19.9	9.4	15.9	6.5	7.9	

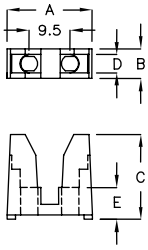

热敏电阻座 NTC HOLDER 8-18-1

- MATERIAL: NYLON 66(UL)
- FLAME CLASS: 94V-0/94V-2
- COLOR: NATURAL

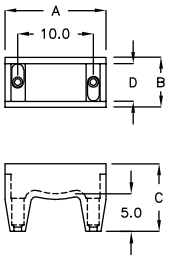

PART NO	A	B	C	D	PACKAGE
HU-05A	13.4	6.6	9.0	5.0	500

Y 电容座 Y CAPACITOR HOLDER 8-18-2

- MATERIAL: NYLON 66(UL)
- FLAME CLASS: 94V-0/94V-2
- COLOR: NATURAL

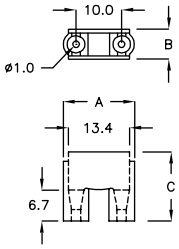

PART NO	A	B	C	PACKAGE
HU-05D	15.6	6.6	15.0	500

热敏电阻座 NTC HOLDER 8-18-3

- MATERIAL: PBT(UL)
- FLAME CLASS: 94V-0
- COLOR: NATURAL

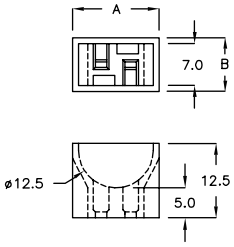

PART NO	A	B	PACKAGE
HU-15	14.5	9.0	500

热敏电阻座 NTC HOLDER 8-18-4

- MATERIAL: PBT(UL)
- FLAME CLASS: 94V-0
- COLOR: NATURAL

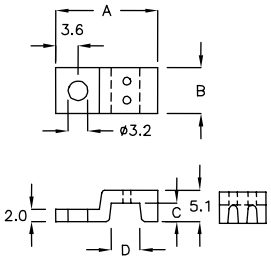

PART NO	A	B	C	D	PACKAGE
HU-7	16.6	7.5	3.0	4.6	1000
HU-7FG	16.6	7.5	3.0	6.1	
HU-07H	16.6	7.5	2.6	6.1	
HU-07L	16.6	7.5	3.5	5.9	

热敏电阻座 NTC HOLDER 8-18-5

- MATERIAL: PBT(UL)
- FLAME CLASS: 94V-0
- COLOR: NATURAL

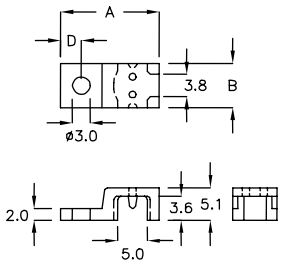

PART NO	A	B	D	PACKAGE
HU-07A	16.7	7.5	3.5	1000
HU-07K	19.5	7.5	3.3	
HU-07P	19.5	7.5	3.5	

热敏电阻座 NTC HOLDER 8-19-1

- MATERIAL: PBT(UL)
- FLAME CLASS: 94V-0
- COLOR: NATURAL

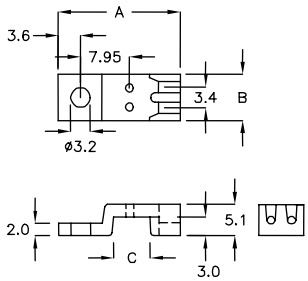

PART NO	A	B	C	PACKAGE
HU-07C	19.8	7.5	5.9	1000
HU-07J	20.8	7.5	6.9	
HU-07Q	19.8	7.5	7.4	

热敏电阻座 NTC HOLDER 8-19-2

- MATERIAL: PBT(UL)
- FLAME CLASS: 94V-0
- COLOR: NATURAL

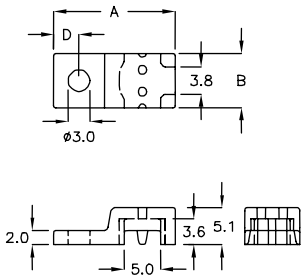

PART NO	A	B	D	PACKAGE
HU-7AC	16.7	7.5	3.5	1000

热敏电阻座 NTC HOLDER 8-19-3

- MATERIAL: PBT(UL)
- FLAME CLASS: 94V-0
- COLOR: NATURAL

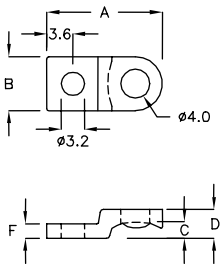

PART NO	A	B	C	D	F	PACKAGE
HU-07F	16.0	7.5	2.2	4.1	2.0	1000
HU-7PK	16.0	7.5	2.2	4.15	2.15	

热敏电阻座 NTC HOLDER 8-19-4

- MATERIAL: PBT(UL)
- FLAME CLASS: 94V-0
- COLOR: NATURAL

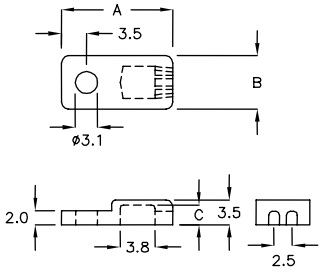

PART NO	A	B	C	PACKAGE
HU-07M	15.5	7.5	2.8	1000

热敏电阻座 NTC HOLDER 8-19-5

- MATERIAL: PBT(UL)
- FLAME CLASS: 94V-0
- COLOR: NATURAL

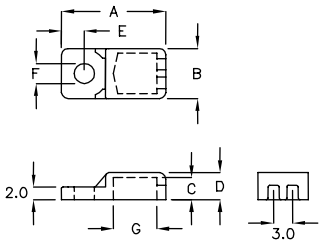

PART NO	A	B	C	D	E	F	G	PACKAGE
HU-7WF	16.55	8.0	3.5	4.3	3.6	3.2	6.9	1000
HU-8DM	16.7	7.5	3.0	4.0	3.5	3.0	5.7	

热敏电阻座 NTC HOLDER 8-20-1

- MATERIAL: PBT(UL)
- FLAME CLASS: 94V-0
- COLOR: NATURAL

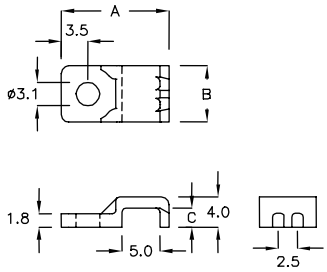

PART NO	A	B	C	PACKAGE
HU-7LA	14.2	7.5	2.5	1000

热敏电阻座 NTC HOLDER 8-20-2

- MATERIAL: PBT(UL)
- FLAME CLASS: 94V-0
- COLOR: NATURAL

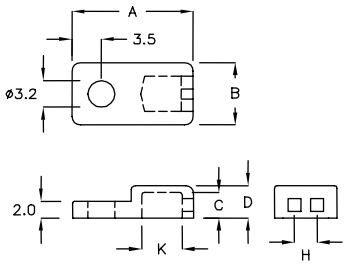

PART NO	A	B	C	D	K	H	PACKAGE
HU-07W	14.5	7.5	3.1	3.9	4.85	2.7	1000
HU-7AW	14.5	7.5	2.7	3.5	4.85	2.7	
HU-7WC	16.5	8.0	3.5	4.3	6.9	2.7	
HU-7WD	15.5	7.5	3.1	3.9	4.85	2.7	
HU-7QN	16.5	8.0	3.5	4.3	6.9	3.5	

热敏电阻座 NTC HOLDER 8-20-3

- MATERIAL: PBT(UL)
- FLAME CLASS: 94V-0
- COLOR: NATURAL

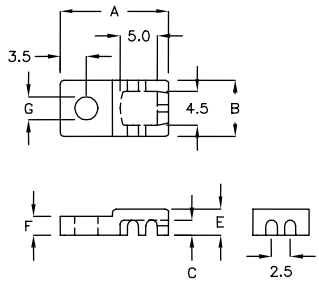

PART NO	A	B	C	E	F	G	PACKAGE
HU-7MA	14.5	7.5	2.0	3.5	2.5	ø3.2	1000
HU-7MK	14.5	7.5	2.8	3.5	2.5	ø3.1	
HU-7RH	14.5	7.5	1.8	3.3	2.3	ø3.2	

热敏电阻座 NTC HOLDER 8-20-4

- MATERIAL: NYLON 66(UL)
- FLAME CLASS: 94V-0/94V-2
- COLOR: NATURAL

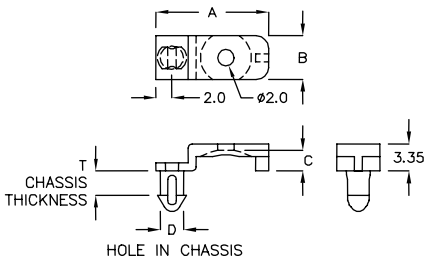

PART NO	A	B	C	D HOLE IN CHASSIS	T CHASSIS THICKNESS	PACKAGE
HU-07U	14.0	5.4	2.55	ø3.0	2.8	1000

热敏电阻座 NTC HOLDER 8-20-5

- MATERIAL: NYLON 66(UL)
- FLAME CLASS: 94V-0/94V-2
- COLOR: NATURAL

NEW

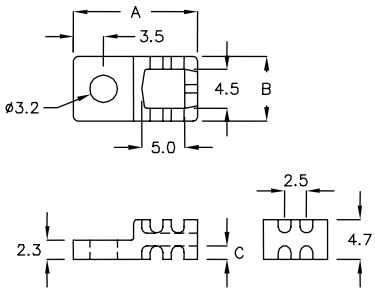

	PART NO	A	B	C	PACKAGE
★	HUDK-7AH	14.5	7.5	1.6	1000

热敏电阻座 NTC HOLDER 8-21-1

- MATERIAL: NYLON 66(UL)
- FLAME CLASS: 94V-0/94V-2
- COLOR: NATURAL

PART NO	A	B	C	PACKAGE
HUH-19	19.0	7.0	2.5	500

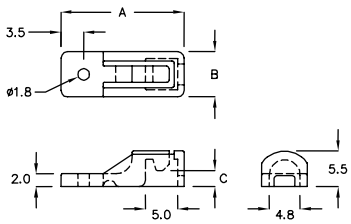

热敏电阻座 NTC HOLDER 8-21-2

- MATERIAL: PBT(UL)
- FLAME CLASS: 94V-0
- COLOR: NATURAL

PART NO	A	B	C	PACKAGE
HU-09	15.5	9.0	3.4	1000

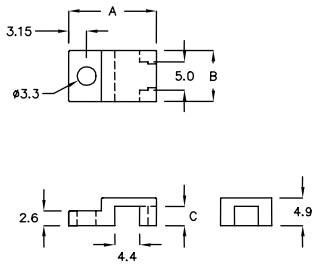

热敏电阻座 NTC HOLDER 8-21-3

- MATERIAL: PBT(UL)
- FLAME CLASS: 94V-0
- COLOR: NATURAL

PART NO	A	B	C	PACKAGE
HU-09A	15.5	9.0	3.4	1000

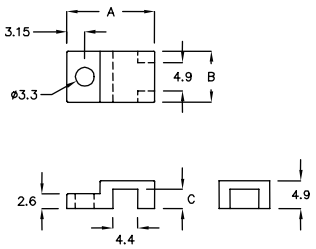

热敏电阻座 NTC HOLDER 8-21-4

- MATERIAL: NYLON 66(UL)
- FLAME CLASS: 94V-0/94V-2
- COLOR: NATURAL

PART NO	A	B	C	PACKAGE
HU-09D	18.0	18.6	3.6	1000

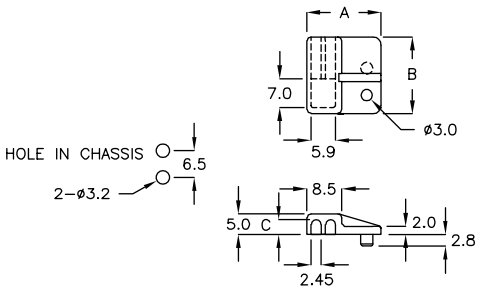

热敏电阻座 NTC HOLDER 8-21-5

- MATERIAL: NYLON 66(UL)
- FLAME CLASS: 94V-0/94V-2
- COLOR: NATURAL

PART NO	A	B	C	PACKAGE
HUD-01	16.55	8.0	2.3	1000

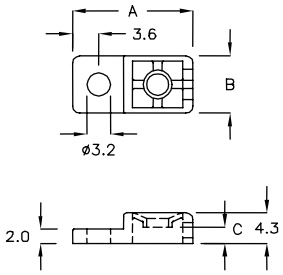

热敏电阻座 NTC HOLDER 8-22-1

- MATERIAL: NYLON 66(UL)
- FLAME CLASS: 94V-0/94V-2
- COLOR: NATURAL

PART NO	A	B	C	PACKAGE
HUA-04	14.0	7.2	6.2	1000

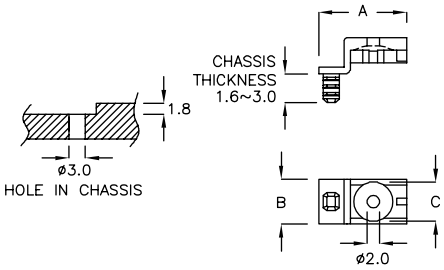

热敏电阻座 NTC HOLDER 8-22-2

- MATERIAL: NYLON 66(UL)
- FLAME CLASS: 94V-0/94V-2
- COLOR: NATURAL

PART NO	A	B	C	D	PACKAGE
HU-7FT	14.0	5.4	6.35	7.0	1000

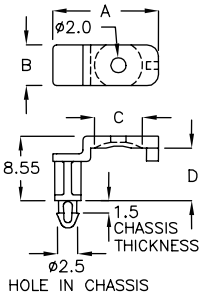

热敏电阻座 NTC HOLDER 8-22-3

- MATERIAL: NYLON 66(UL)
- FLAME CLASS: 94V-0/94V-2
- COLOR: NATURAL

PART NO	A	PACKAGE
HUL-12CP	12.0	1000

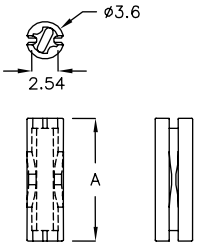

热敏电阻座 NTC HOLDER 8-22-4

- MATERIAL: NYLON 66(UL)
- FLAME CLASS: 94V-0/94V-2
- COLOR: BLACK

PART NO	A	B	C	PACKAGE
HUC-01	7.5	4.5	6.4	2000

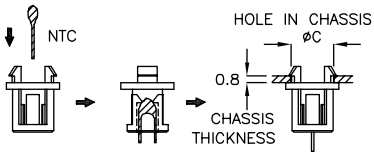

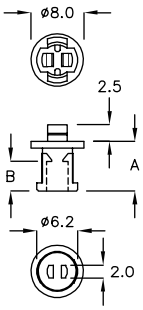

热敏电阻座 NTC HOLDER 8-22-5

- MATERIAL: TPR(UL)
- COLOR: BLACK

PART NO	A	C	PACKAGE
HUC-02	5.2	6.4	2000

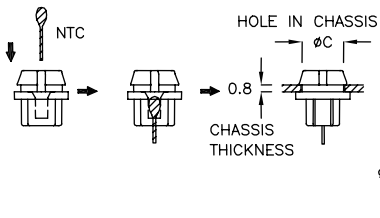

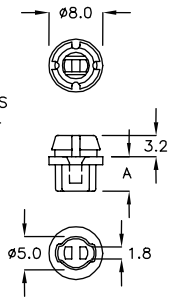

热敏电阻座 NTC HOLDER 8-23-1

- MATERIAL: NYLON 66(UL)
- FLAME CLASS: 94V-0/94V-2
- COLOR: BLACK

PART NO	A	PACKAGE
HUP-05	5.5	500

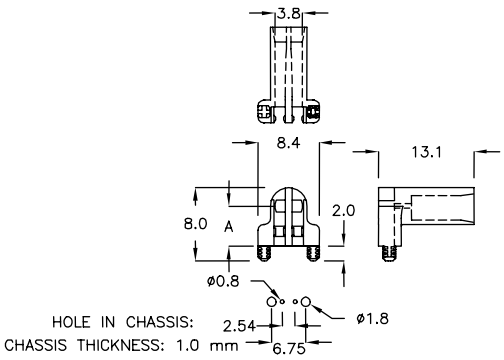

热敏电阻座 NTC HOLDER 8-23-2

- MATERIAL: NYLON 66(UL)
- FLAME CLASS: 94V-0/94V-2
- COLOR: NATURAL

PART NO	A	B	C	PACKAGE
DXW-8A	10.5	8.4	7.5	1000

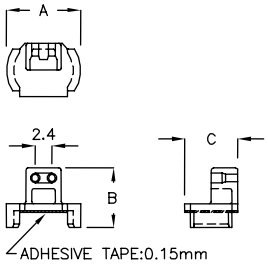

热敏电阻座 NTC HOLDER 8-23-3

- MATERIAL: PPS(UL)
- FLAME CLASS: 94V-0
- COLOR: BLACK

PART NO	A	PACKAGE
HUM-20K	10.6	500

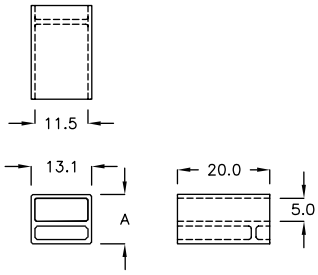

光感应器座 LIGHT SENSOR HOLDER 8-23-4

- MATERIAL: NYLON 66(UL)
- FLAME CLASS: 94V-0/94V-2
- COLOR: NATURAL

PART NO	A	PACKAGE
MTU-09	9.0	1000

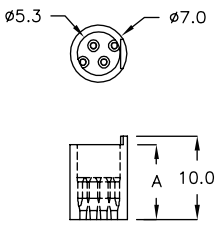

光感应器座 LIGHT SENSOR HOLDER 8-23-5

- MATERIAL: NYLON 66(UL)
- FLAME CLASS: 94V-0/94V-2
- COLOR: NATURAL

PART NO	A	PACKAGE
MTU-16D	16.0	500

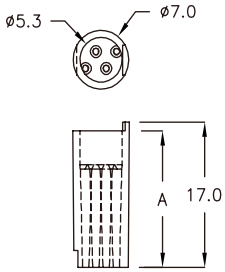

华司 WASHER 8-24-1

- MATERIAL: NYLON 66(UL)
- FLAME CLASS: 94V-0/94V-2
- COLOR: NATURAL

PART NO	A	B	C	D	PACKAGE
U-6A	6.5	ø9.0	ø2.6	ø6.4	2000

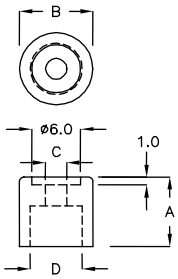

华司 WASHER 8-24-2

- MATERIAL: NYLON 66(UL)
- FLAME CLASS: 94V-0/94V-2
- COLOR: NATURAL

PART NO	A	B	C	D	PACKAGE
U-10A	10.0	ø9.0	ø3.4	ø6.0	1000

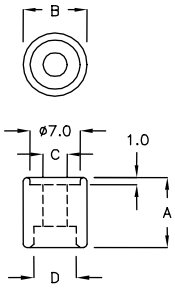

华司 WASHER 8-24-3

- MATERIAL: NYLON 66(UL)
- FLAME CLASS: 94V-0/94V-2
- COLOR: NATURAL

PART NO	A	B	C	D	E	PACKAGE
UWA-01	9.9	ø9.2	ø3.3	ø5.6	3.1	1000

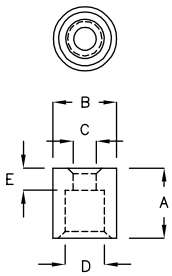

圆体间隔柱 SPACER SUPPORT 8-24-4

- MATERIAL: NYLON 66(UL)
- FLAME CLASS: 94V-0/94V-2
- COLOR: NATURAL

PART NO	A	B	C	D	PACKAGE
UWB-07	7.0	ø9.4	ø6.5	ø5.9	1000

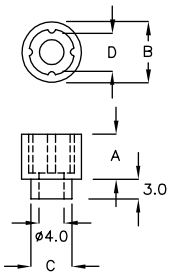

华司 WASHER 8-25-1

- MATERIAL: NYLON 66(UL)
- FLAME CLASS: 94V-0/94V-2
- COLOR: NATURAL

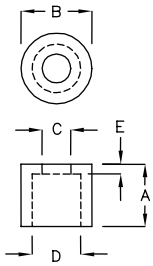

PART NO	A	øB	øC	øD	E	PACKAGE
U-2DK	2.5	7.0	3.8	5.0	1.0	2000
U-3	3.2	6.0	3.1	4.4	0.7	
U-3A	3.2	6.0	3.0	5.0	1.2	
U-3C	3.0	5.0	2.2	4.0	0.5	
U-3S	3.3	5.0	2.2	4.1	1.3	
U-4	4.2	6.0	2.2	4.3	1.3	
U-04D	4.8	10.5	6.2	9.4	0.5	
U-4FR	4.5	8.5	4.5	7.0	1.0	
U-4HK	4.5	9.1	5.5	6.8	2.7	
U-4S	4.3	5.0	2.2	4.2	1.2	
U-4WP	4.25	8.0	5.2	7.1	2.25	
U-5	4.6	8.0	4.0	6.5	1.6	
U-5C	5.6	8.0	4.0	6.5	1.6	
U-5H	5.0	9.0	5.3	8.0	0.5	

PART NO	A	øB	øC	øD	E	PACKAGE
U-5T	5.0	9.5	6.0	8.5	0.5	2000
U-05D	5.7	8.0	3.5	6.1	0.5	
U-6	6.5	8.0	3.5	6.1	0.85	
U-06C	6.0	10.5	6.5	9.5	0.5	
U-06D	6.5	10.4	6.9	9.4	0.5	1000
U-7	7.7	11.0	3.2	6.7	2.1	
U-7A	3.5	8.0	3.5	5.7	1.2	2000
U-07C	7.0	10.0	3.5	7.5	2.0	1000
U-8	7.7	11.0	4.0	7.1	1.6	
U-8A	7.5	12.4	8.2	11.4	0.5	
U-8S	7.7	11.0	4.0	7.1	2.0	
U-10	3.6	12.0	4.0	10.1	1.5	
U-12	12.0	10.0	3.2	6.3	1.5	
U-12A	12.0	8.5	4.5	7.0	6.0	

华司 WASHER 8-25-2

- MATERIAL: NYLON 66(UL)
- FLAME CLASS: 94V-0/94V-2
- COLOR: NATURAL

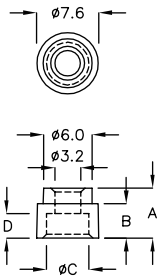

PART NO	A	B	C	D	PACKAGE
UWC-01	6.1	4.2	5.2	3.0	1000

华司 WASHER 8-25-3

- FLAME CLASS: 94V-0
- COLOR: NATURAL

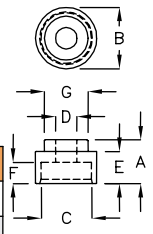

PART NO	MATERIAL	A	B	C	D	E	F	G	PACKAGE
UWT-5AC	N66	6.6	ø8.1	ø7.2	ø3.1	5.0	4.2	ø4.0	1000
UWT-6QR	PBT	8.2	ø11.5	ø9.5	ø4.1	6.0	4.0	ø8.2	2000

华司 WASHER 8-25-4

- MATERIAL: NYLON 66(UL)
- FLAME CLASS: 94V-0/94V-2
- COLOR: NATURAL

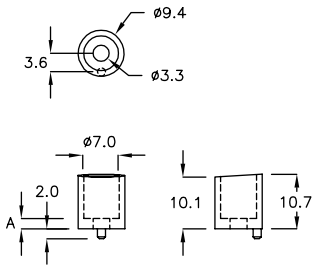

PART NO	A	PACKAGE
WRA-02	1.0	1000

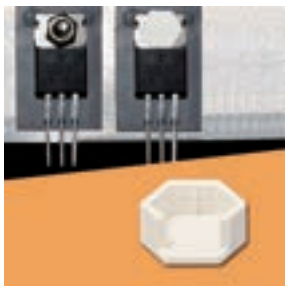

华司 WASHER 8-26-1

- MATERIAL: NYLON 46(UL)
- FLAME CLASS: 94V-0/94V-2
- COLOR: NATURAL
- SUITABLE NUT: M3 NUT

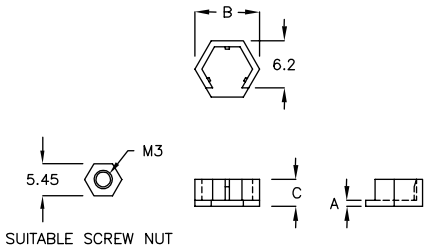

PART NO	A	B	C	PACKAGE
U-05M	0.8	8.6	3.6	2000

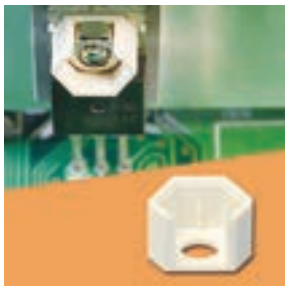

华司 WASHER 8-26-2

- MATERIAL: NYLON 46(UL)
- FLAME CLASS: 94V-0/94V-2
- COLOR: NATURAL
- SUITABLE NUT: M3 NUT

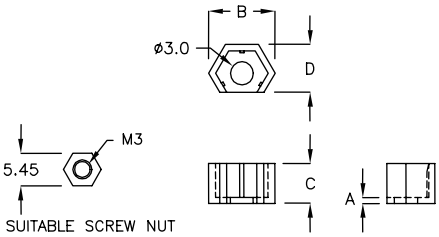

PART NO	A	B	C	D	PACKAGE
U-05J	0.8	8.6	5.2	6.25	2000
U-05Y	0.8	7.8	4.0	5.8	
U-5QF	0.8	8.6	4.0	6.25	

华司 WASHER 8-26-3

- FLAME CLASS: 94V-0
- COLOR: NATURAL,BLACK

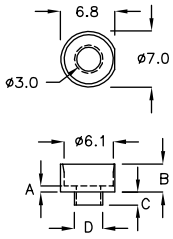

PART NO	MATERIAL	A	B	C	D	PACKAGE
U-03D	N46	0.8	3.5	1.6	ø3.5	2000
U-03F	N46	0.8	3.8	2.2	ø3.5	
U-03L	N46	0.8	5.0	1.6	ø3.5	
U-03R	N46	0.8	2.5	2.2	ø3.5	
U-4RY	N66	0.8	4.0	3.5	ø3.8	
U-4XQ	PPS	0.8	3.9	2.0	ø3.5	
U-5AB	N46	1.9	4.9	2.4	ø3.5	
U-5AF	N46	1.9	3.9	2.4	ø3.5	
U-5KW	N46	1.9	4.9	3.6	ø5.0	

华司 WASHER 8-26-4

- MATERIAL: NYLON 46(UL)
- FLAME CLASS: 94V-0/94V-2
- COLOR: NATURAL
- SUITABLE NUT: M3 NUT

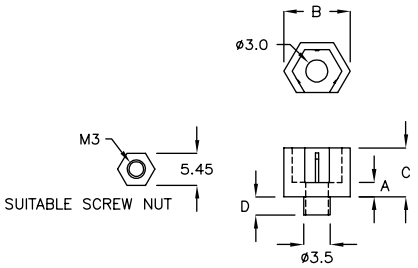

PART NO	A	B	C	D	PACKAGE
U-5CG	1.9	8.6	6.4	2.4	2000

华司 WASHER 8-26-5

- MATERIAL: NYLON 46(UL)
- FLAME CLASS: 94V-0/94V-2
- COLOR: NATURAL
- SUITABLE NUT: M3 NUT

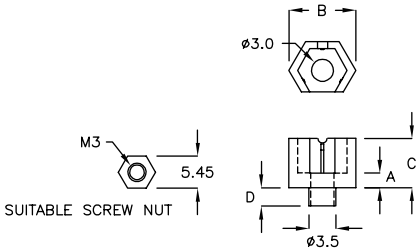

PART NO	A	B	C	D	PACKAGE
U-5NR	1.9	8.6	6.0	2.2	2000

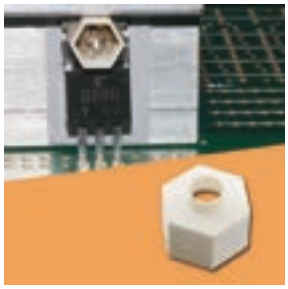

华司 WASHER 8-27-1

- MATERIAL: NYLON 46(UL)
- FLAME CLASS: 94V-0/94V-2
- COLOR: NATURAL
- SUITABLE NUT: M3 NUT

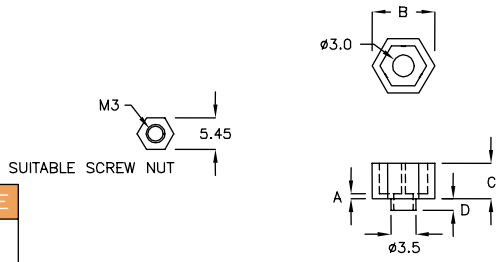

PART NO	A	B	C	D	PACKAGE
U-05L	0.8	8.6	5.0	1.6	2000
U-05K	0.8	8.6	5.2	2.2	
U-05W	0.8	8.6	4.0	1.6	
U-5CF	1.9	8.6	6.3	2.4	
U-5CH	0.8	8.6	5.2	1.6	

华司 WASHER 8-27-2

- MATERIAL: NYLON 66(UL)
- FLAME CLASS: 94V-0/94V-2
- COLOR: NATURAL
- SUITABLE NUT: M3 NUT

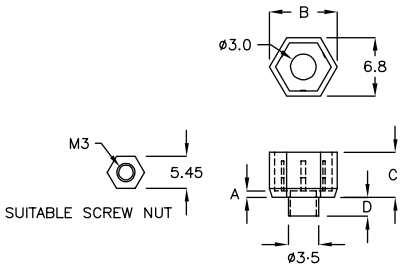

PART NO	A	B	C	D	PACKAGE
U-05P	0.8	7.85	5.2	2.2	2000

华司 WASHER 8-27-3

- MATERIAL: NYLON 66(UL)
- FLAME CLASS: 94V-0/94V-2
- COLOR: BLACK
- WITH COUNTERSUNK SCREW

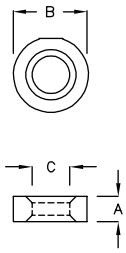

PART NO	A	B	C	PACKAGE
WS-3KP	2.0	ø6.0	ø3.0	2000
WS-3MD	2.0	ø6.0	ø3.7	
WS-3QR	1.8	ø5.8	ø3.5	

华司 WASHER 8-27-4

- MATERIAL: NYLON 66(UL)
- FLAME CLASS: 94V-0/94V-2
- COLOR: BLACK

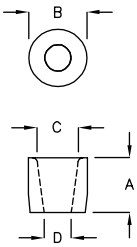

PART NO	A	B	C	D	PACKAGE
SHC-06	6.0	ø6.5	ø4.6	ø3.0	2000

O 型环 ORING 8-27-5

- MATERIAL: SILICONE
- COLOR: BLACK

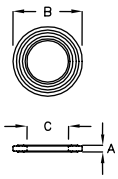

PART NO	A	B	C	PACKAGE
OPW-7A	1.5	ø13.5	ø7.2	1000
OPW-9CD	1.5	ø15.5	ø9.3	
OPW-15D	1.8	ø21.4	ø15.65	
OPW-19M	1.8	ø26.7	ø19.5	
OPW-20	1.8	ø28.2	ø20.0	
OPW-24A	2.0	ø31.5	ø24.3	

O 型环 ORING 8-28-1

- MATERIAL: SILICONE
- COLOR: BLACK,ORANGE

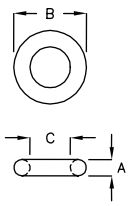

PART NO	A	B	C	PACKAGE
OIL-02C	1.0	ø4.5	ø2.5	5000
OIL-10	1.5	ø13.0	ø10.0	2000

华司 WASHER 8-28-2

- MATERIAL: SILICONE
- COLOR: BLACK

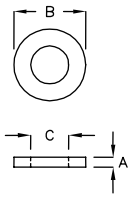

PART NO	A	B	C	PACKAGE
UWX-11	1.5	ø11.0	ø5.8	1000
WSR-11RM	1.5	ø18.0	ø11.9	2500

华司 WASHER 8-28-3

- MATERIAL: SILICONE
- COLOR: BLACK
- ADHESIVE TAPE: 3M or EQUIVALENT

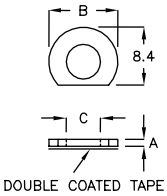

PART NO	A	B	C	PACKAGE
WSU-10	1.0	ø10.0	ø5.0	2000

华司 WASHER 8-28-4

- MATERIAL: NYLON 66(UL)
- FLAME CLASS: 94V-0/94V-2
- COLOR: NATURAL

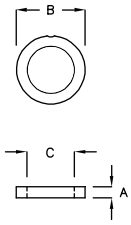

PART NO	A	B	C	PACKAGE
MYC-18Y	0.5	ø18.7	ø14.5	1000

螺丝盖 SCREW COVER 8-29-1

- MATERIAL: NYLON 66(UL)
- FLAME CLASS: 94V-0/94V-2
- COLOR: BLACK

美观保护螺丝
Better appearance and with Protection .
如有其他颜色需求，欢迎来电询问
If you have other color request, kindly feel free to contact with us.

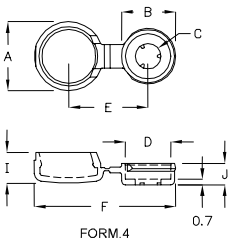

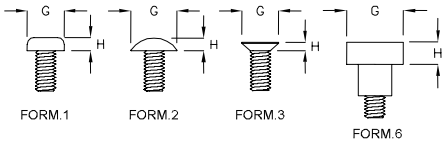

PART NO	A	B	C	D	E	F	I	J	SUITABLE SCREW				配合件 FORM	PACKAGE
									SCREW	FORM	G	H		
M3P−8A	ø8.7	ø6.7	ø3.2	ø5.7	10.0	17.9	3.9	2.7	M3	1	5.5	2.0	4	1000
M3T−10K	ø10.1	ø8.1	ø3.2	ø7.1	11.4	20.7	3.9	2.7	M3	2	6.9	1.9	4	
M3F−9W	ø9.2	ø7.2	ø3.2	ø6.2	10.5	18.9	4.1	3.0	M3	3	6.0	1.8	5	
★ M3Q−14K	ø13.1	ø11.5	ø6.3	ø10.2	14.5	28.1	4.1	6.0	M3	6	10.0	5.0	4	
M4P−10A	ø10.2	ø8.2	ø4.2	ø7.2	11.5	20.9	4.4	3.3	M4	1	7.0	2.6	4	
M4T−12K	ø12.6	ø10.6	ø4.2	ø9.6	13.9	25.7	4.4	3.3	M4	2	9.4	2.5	4	
M4F−11W	ø11.2	ø9.2	ø4.2	ø8.2	12.5	22.9	4.1	3.0	M4	3	8.0	2.3	5	
UN6K−10K	ø10.1	ø8.1	ø3.7	ø7.1	11.4	20.6	3.9	2.8	#6−32	1	6.9	2.1	4	
UN6K−9D	ø9.8	ø7.8	ø3.7	ø6.8	11.1	20.1	4.4	3.3	#6−32	2	6.6	2.6	4	
UN6K−10FQ	ø10.3	ø8.3	ø3.7	ø7.3	11.6	21.1	4.1	3.0	#6−32	3	7.1	2.1	5	

螺丝盖 SCREW COVER 8-29-2

- MATERIAL: NYLON 66(UL)
- FLAME CLASS: 94V-0/94V-2
- COLOR: BLACK

NEW

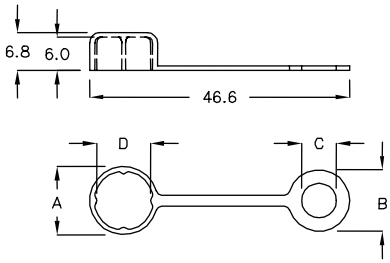

	PART NO	A	B	C	D	PACKAGE
★	M3G−46A	ø12.2	ø11.0	ø6.2	9.6	500

C 型环 C RING 8-29-3

- MATERIAL: NYLON 66(UL)
- FLAME CLASS: 94V-0/94V-2
- COLOR: NATURAL,BLACK

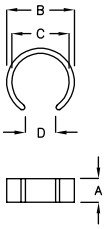

PART NO	A	B	C	D	PACKAGE
WCC−05	2.3	ø6.55	ø5.55	2.9	2000
WCC−5A	2.46	ø6.2	ø5.05	1.8	

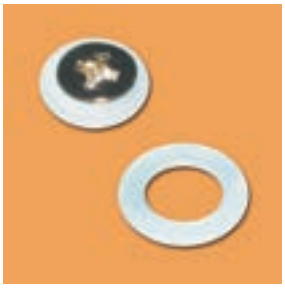

华司 WASHER

- MATERIAL: NYLON 66(UL)
- FLAME CLASS: 94V-0/94V-2
- COLOR: NATURAL

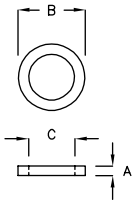

返回图片索引

PART NO	A	B	C	PACKAGE
WS-1BD	1.0	ø3.2	ø1.6	2000
WS-01N	0.45	ø3.9	ø1.85	
WS-2RK	1.0	ø4.0	ø2.0	
WS-2HR	1.0	ø4.1	ø2.2	
WS-0	0.4	ø4.2	ø2.5	
WS-04C	0.5	ø4.5	ø2.5	
WS-4KT	1.5	ø4.9	ø3.7	
WS-1D	1.0	ø5.0	ø2.7	
WS-1F	1.5	ø5.0	ø2.5	
WS-2DC	1.8	ø5.0	ø3.1	
WS-1B	0.5	ø5.5	ø2.5	
WS-1C	0.5	ø5.5	ø3.0	
WS-2FA	1.8	ø5.5	ø3.1	
WS-3GK	1.0	ø5.6	ø3.0	
WS-3A	1.4	ø5.6	ø2.9	
WS-6NZ	0.5	ø6.0	ø4.3	
WS-01L	0.8	ø6.0	ø3.1	
WS-2K	1.0	ø6.0	ø2.7	
WS-5HY	1.0	ø6.2	ø3.2	
WS-06K	1.5	ø6.35	ø3.3	
WS-06A	1.0	ø6.5	ø3.8	
WS-06C	1.35	ø6.8	ø4.9	
WS-07H	0.5	ø7.0	ø2.2	
WS-1R	0.6	ø7.0	ø4.6	
WS-1M	0.8	ø7.0	ø3.1	
WS-02M	1.0	ø7.0	ø3.2	
WS-3SB	1.0	ø7.0	ø3.5	
WS-07F	0.65	ø7.5	ø4.3	
WS-07C	1.55	ø7.5	ø5.1	
WS-08F	0.9	ø7.8	ø4.1	
WS-4	0.8	ø7.9	ø4.0	
WS-9	0.5	ø8.0	ø5.1	
WS-23	0.6	ø8.0	ø1.6	
WS-1S	0.7	ø8.0	ø3.0	
WS-8RM	0.8	ø8.0	ø3.2	
WS-6FP	0.8	ø8.0	ø5.8	
WS-1	1.0	ø8.0	ø3.2	
WS-57	1.6	ø8.0	ø3.0	
WS-9A	2.0	ø8.0	ø5.1	
WS-2	1.7	ø8.1	ø3.2	
WS-8MK	1.0	ø8.2	ø5.65	
WS-24	0.8	ø9.0	ø4.0	

PART NO	A	B	C	PACKAGE
WS-9RC	0.75	ø9.0	ø5.85	2000
WS-9DK	0.75	ø9.0	ø6.25	
WS-9KR	0.8	ø9.0	ø4.4	
WS-4PS	1.0	ø9.0	ø4.5	
WS-06M	1.5	ø9.0	ø5.5	
WS-22	1.8	ø9.0	ø4.2	
WS-5KL	1.0	ø9.5	ø5.0	
WS-7DM	3.7	ø9.6	ø4.2	
WS-5	3.0	ø9.9	ø4.0	
WS-06D	0.8	ø10.0	ø6.7	
WS-10C	1.0	ø10.0	ø3.1	
WS-6	1.1	ø10.0	ø5.5	
WS-3	1.2	ø10.0	ø4.2	
WS-10F	2.65	ø10.0	ø6.6	
WS-10AC	3.0	ø10.0	ø6.6	
WS-7	3.5	ø10.0	ø6.0	
WS-10	4.0	ø10.0	ø3.6	1000
WS-10AH	0.4	ø10.2	ø6.5	2000
WS-11F	1.0	ø11.0	ø4.1	
WS-11MC	1.5	ø11.1	ø5.2	
WS-11KY	2.0	ø11.5	ø4.5	
WS-8	0.5	ø12.0	ø8.2	
WS-12S	1.0	ø12.0	ø3.1	
WS-12FG	1.0	ø12.0	ø7.4	
WS-12A	1.5	ø12.0	ø4.5	
WS-12	1.2	ø12.1	ø6.4	
WS-13	3.8	ø12.6	ø6.4	1000
WS-13A	4.2	ø13.0	ø3.6	
WS-13C	1.0	ø13.0	ø10.0	2000
WS-14	1.0	ø14.0	ø6.5	
WS-14F	1.0	ø14.0	ø10.4	
WS-56	1.6	ø14.1	ø8.2	
WS-15	4.8	ø14.7	ø12.6	1000
WS-16D	0.8	ø16.0	ø9.7	2000
WS-16A	1.6	ø16.0	ø9.7	
WS-16F	1.6	ø16.0	ø8.4	
WS-17	1.5	ø17.0	ø13.5	
WS-18	0.8	ø18.0	ø4.2	
WS-18QT	1.4	ø18.0	ø8.1	
WS-20	1.0	ø20.0	ø14.5	1000
WS-20A	2.0	ø20.0	ø10.5	
WS-21	1.0	ø21.0	ø14.1	
WS-22PM	1.5	ø22.0	ø16.5	
WS-26	1.5	ø26.0	ø20.5	
WS-60	2.0	ø60.0	ø9.0	500

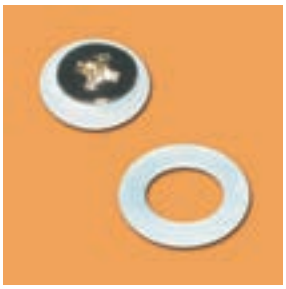

华司 WASHER 8-31-1

- MATERIAL: NYLON 6
- COLOR: NATURAL
- OTHER MATERIAL&THICKNESS AVAILABLE FOR OPTIONAL REQUEST
  (我司备有其他尺寸，欢迎来电洽询)

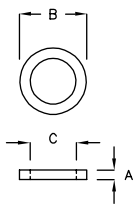

PART NO	A	B	C	PACKAGE
NWT-01	0.5	ø4.5	ø2.1	5000
NWT-02	0.5	ø4.5	ø2.6	
NWT-03	0.5	ø4.6	ø2.5	
NWT-04	0.5	ø4.7	ø2.6	
NWT-05	0.5	ø5.0	ø2.2	
NWT-06	0.5	ø5.0	ø2.5	
NWT-07	0.5	ø5.0	ø2.6	
NWT-08	0.5	ø5.0	ø3.0	
NWT-09	0.5	ø5.0	ø3.1	
NWT-10	0.5	ø5.0	ø3.2	
NWT-11	0.5	ø5.0	ø3.5	
NWT-12	0.5	ø5.6	ø3.1	
NWT-13	0.5	ø5.6	ø4.8	
NWT-14	0.5	ø6.0	ø2.1	
NWT-15	0.5	ø6.0	ø3.1	
NWT-16	0.5	ø6.0	ø3.2	
NWT-17	0.5	ø6.0	ø3.6	
NWT-18	0.5	ø6.0	ø4.1	
NWT-19	0.5	ø6.0	ø4.3	
NWT-21	0.5	ø6.5	ø2.98	
NWT-22	0.5	ø6.5	ø3.5	
NWT-23	0.5	ø6.5	ø4.1	
NWT-24	0.5	ø7.0	ø2.5	
NWT-25	0.5	ø7.0	ø4.2	
NWT-26	0.5	ø7.0	ø5.1	
NWT-27	0.5	ø7.0	ø3.1	
NWT-28	0.5	ø7.5	ø4.8	
NWT-29	0.5	ø7.8	ø3.2	
NWT-30	0.5	ø8.0	ø3.1	

PART NO	A	B	C	PACKAGE
NWT-31	0.5	ø8.0	ø4.1	5000
NWT-32	0.5	ø8.0	ø5.0	
NWT-33	0.5	ø8.0	ø5.1	
NWT-34	0.5	ø8.0	ø6.0	
NWT-36	0.5	ø8.8	ø4.0	
NWT-37	0.5	ø8.8	ø5.2	
NWT-38	0.5	ø9.0	ø4.5	
NWT-39	0.5	ø9.0	ø6.1	
NWT-40	0.5	ø10.0	ø3.1	
NWT-41	0.5	ø10.0	ø4.1	
NWT-42	0.5	ø10.0	ø5.1	
NWT-43	0.5	ø10.0	ø5.2	
NWT-44	0.5	ø10.0	ø5.5	
NWT-45	0.5	ø10.0	ø6.1	
NWT-46	0.5	ø10.0	ø6.4	
NWT-47	0.5	ø10.4	ø7.2	
NWT-48	0.5	ø10.5	ø6.6	
NWT-49	0.5	ø10.8	ø7.2	
NWT-50	0.5	ø11.0	ø5.0	
NWT-51	0.5	ø11.6	ø7.6	
NWT-52	0.5	ø12.0	ø3.6	
NWT-53	0.5	ø12.0	ø5.2	
NWT-54	0.5	ø12.0	ø6.0	
NWT-55	0.5	ø12.0	ø7.3	
NWT-56	0.5	ø12.0	ø8.0	
NWT-58	0.5	ø13.0	ø6.5	
NWT-59	0.5	ø13.0	ø7.95	
NWT-60	0.5	ø13.0	ø8.0	
NWT-99	0.5	ø9.1	ø4.0	

华司 WASHER 8-31-2

- MATERIAL: NYLON 46(UL)
- FLAME CLASS: 94V-0/94V-2
- COLOR: NATURAL

PART NO	A	B	C	PACKAGE
U-02A	0.3	ø7.0	2.3	2000

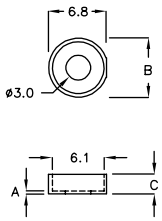

华司 WASHER 8-31-3

- MATERIAL: NYLON 46(UL)
- FLAME CLASS: 94V-0/94V-2
- COLOR: NATURAL

PART NO	A	B	C	PACKAGE
U-02F	0.3	ø7.0	1.9	2000
U-03K	0.8	ø7.0	3.8	

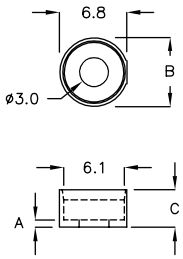

华司 WASHER 8-32-1

- MATERIAL: NYLON 66(UL)
- FLAME CLASS: 94V-0/94V-2
- COLOR: BLACK

PART NO	A	B	C	PACKAGE
UWD-6K	1.1	ø14.3	3.65	1000

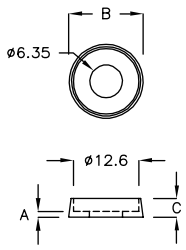

华司 WASHER 8-32-2

- MATERIAL: PPO(UL)
- FLAME CLASS: 94V-1
- COLOR: GRAY

PART NO	A	B	C	PACKAGE
UWJ-14Q	2.0	ø14.6	4.0	1000

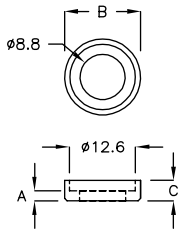

华司 WASHER 8-32-3

- MATERIAL: NYLON 66(UL)
- FLAME CLASS: 94V-0/94V-2
- COLOR: BLACK
- WITH M3 SCREW

PART NO	A	B	C	PACKAGE
UWD-3F	0.6	ø6.7	2.3	1000

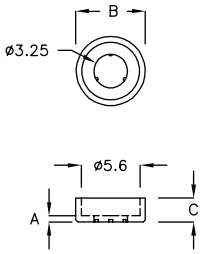

华司 WASHER 8-32-4

- MATERIAL: NYLON 66(UL)
- FLAME CLASS: 94V-0/94V-2
- COLOR: NATURAL
- WITH M3 SCREW

PART NO	A	B	C	PACKAGE
UWK-9	2.0	10.0	9.0	1000

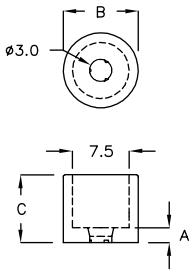

华司 WASHER 8-32-5

- MATERIAL: NYLON 66(UL)
- FLAME CLASS: 94V-0/94V-2
- COLOR: NATURAL

PART NO	A	B	C	SCREW	PACKAGE
WSF-02	0.6	ø4.5	ø1.6	M2x0.4	2000
WSF-3	0.8	ø8.3	ø3.2	#6-32	
WSF-3A	0.75	ø6.7	ø2.5	M3x0.5	
WSF-3D	0.6	ø5.0	ø2.5	M3x0.5	
WSF-3GK	0.6	ø5.0	ø2.4		
WSF-3M	1.0	ø8.0	ø2.5	M3x0.5	
WSF-3S	0.6	ø8.3	ø3.2	#6-32	
WSF-04	1.0	ø12.5	ø3.6	M4x0.7	
WSF-06	2.0	ø12.0	ø5.25		
WSF-6KT	1.0	ø6.3	ø2.3		
WSF-10	0.7	ø10.0	ø5.2		

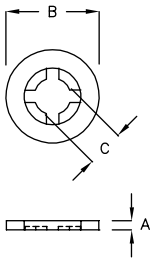

华司 WASHER 8-33-1

- MATERIAL: NYLON 66(UL)
- FLAME CLASS: 94V-0/94V-2
- COLOR: NATURAL

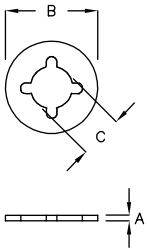

PART NO	A	B	C	SCREW	PACKAGE
WSF-09	0.6	ø9.0	ø4.2	M5x0.8	2000

华司 WASHER 8-33-2

- MATERIAL: NYLON 6
- COLOR: NATURAL

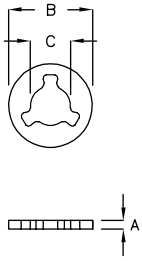

PART NO	A	B	C	PACKAGE
WRD-2A	0.5	ø4.8	ø2.3	10000

华司 WASHER 8-33-3

- MATERIAL: NYLON 66(UL)
- FLAME CLASS: 94V-0/94V-2
- COLOR: NATURAL

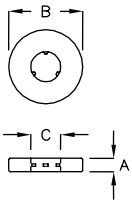

PART NO	A	B	C	USE SCREW	PACKAGE
WS-5RM	1.0	ø5.5	ø3.2	M3	2000
WS-5WK	1.2	ø5.5	ø3.2		
WS-5YT	1.8	ø5.5	ø3.2		
WS-6AT	1.5	ø6.35	ø3.2		
WS-2T	0.9	ø6.5	ø3.25		
WS-7RT	0.8	ø7.0	ø3.2		
WS-7YM	1.2	ø7.0	ø4.2	M4	
WS-7TH	1.0	ø7.0	ø4.2		
WS-7AY	1.5	ø7.5	ø4.2		
WS-7FT	0.65	ø7.5	ø4.2		
WS-8WT	0.8	ø7.9	ø4.2		

PART NO	A	B	C	USE SCREW	PACKAGE
WS-8HT	0.5	ø8.0	ø5.3	M5	2000
WS-8ST	1.0	ø8.0	ø3.2	M3	
WS-8TQ	2.0	ø8.0	ø3.2		
WS-3T	1.2	ø10.0	ø4.2	M4	
WS-11KT	1.0	ø11.0	ø4.2		
WS-11DF	2.0	ø11.0	ø4.2		
WS-11QT	2.0	ø11.5	ø4.2		
WS-12T	1.0	ø12.0	ø3.2	M3	
WS-12CK	2.0	ø12.0	ø3.2		
WS-4T	3.0	ø14.0	ø4.2	M4	
WS-15T	1.0	ø15.0	ø3.2	M3	
WS-15KR	2.0	ø15.0	ø3.2		

华司 WASHER 8-33-4

- MATERIAL: NYLON 66(UL)
- FLAME CLASS: 94V-0/94V-2
- COLOR: NATURAL

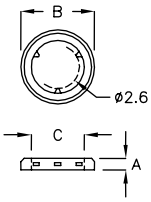

PART NO	A	B	C	USE SCREW	PACKAGE
WRK-3C	0.7	ø4.6	ø3.3	M3	2000

华司 WASHER 8-34-1

- MATERIAL: NYLON 66(UL)
- FLAME CLASS: 94V-0/94V-2
- COLOR: NATURAL

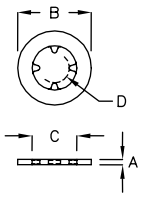

PART NO	A	B	C	D	USE SCREW	PACKAGE
WRC−5Q	0.8	ø11.0	ø6.6	ø4.4	—	2000
WRC−3BA	1.0	ø8.0	ø3.5	ø2.7	M3	
WRC−4GC	0.8	ø10.0	ø4.5	ø3.7	M4	
WRC−5DH	1.0	ø11.0	ø5.35	ø4.5	M5	
WRC−5MK	1.0	ø11.0	ø5.5	ø4.7	M5	

华司 WASHER 8-34-2

- MATERIAL: PE
- COLOR: NATURAL

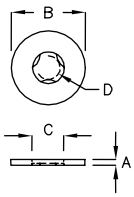

PART NO	A	B	C	D	USE SCREW	PACKAGE
WRD−3K	0.8	ø10.0	ø4.4	ø3.2	M4	2000
WRD−5C	1.2	ø12.0	ø6.4	ø5.2	M6	

华司 WASHER 8-34-3

- MATERIAL: NYLON 66(UL)
- FLAME CLASS: 94V-0/94V-2
- COLOR: NATURAL

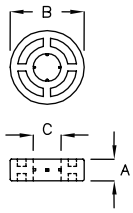

PART NO	A	B	C	USE SCREW	PACKAGE
WS−20T	2.4	ø8.0	ø3.0	M3	2000

华司 WASHER 8-34-4

- MATERIAL: NYLON 66(UL)
- FLAME CLASS: 94V-0/94V-2
- COLOR: NATURAL

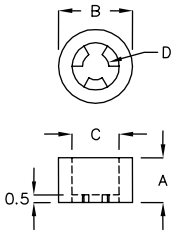

PART NO	A	B	C	D	USE SCREW	PACKAGE
WSX−1A	3.0	ø5.0	ø3.2	ø1.8	M1.6	2000

华司 WASHER 8-34-5

- MATERIAL: NYLON 66(UL)
- FLAME CLASS: 94V-0/94V-2
- COLOR: NATURAL

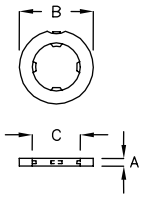

PART NO	A	B	C	USE SCREW	PACKAGE
WS−4FT	1.0	ø7.0	ø4.2	M4	2000
WS−4XT	1.5	ø7.0	ø4.2		
WS−4BT	2.0	ø7.0	ø4.2		
WS−5T	0.8	ø8.0	ø5.2	M5	
WS−5WT	1.0	ø8.0	ø5.2		
WS−5LT	1.5	ø8.0	ø5.2		
WS−5BT	2.0	ø8.0	ø5.2		
WS−6GT	1.0	ø9.0	ø6.2	M6	
WS−6HT	1.5	ø9.0	ø6.2		
WS−6PT	2.0	ø9.0	ø6.2		

华司 WASHER 8-35-1

- MATERIAL: NYLON 66(UL)
- FLAME CLASS: 94V-0/94V-2
- COLOR: NATURAL

PART NO	A	B	C	PACKAGE
WRP-5LA	5.5	ø8.7	ø5.8	1000

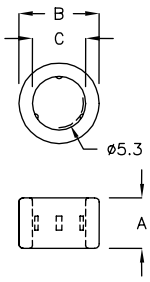

华司 WASHER 8-35-2

- MATERIAL: NYLON 66(UL)
- FLAME CLASS: 94V-0/94V-2
- COLOR: NATURAL

PART NO	A	B	C	USE SCREW	PACKAGE
WSH-08	0.5	ø8.0	3.4	#6-32	2000

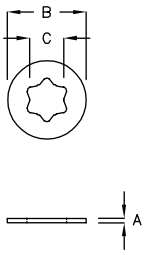

华司 WASHER 8-35-3

- MATERIAL: NYLON 66(UL)
- FLAME CLASS: 94V-0/94V-2
- COLOR: NATURAL

PART NO	A	B	C	PACKAGE
UWD-3D	2.0	ø12.0	ø3.2	1000

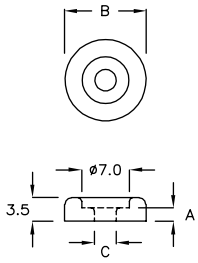

华司 WASHER 8-35-4

- MATERIAL: NYLON 66(UL)
- FLAME CLASS: 94V-0/94V-2
- COLOR: NATURAL

PART NO	A	B	C	PACKAGE
WWK-11A	2.25	ø11.0	ø2.2	2000

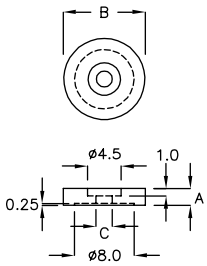

华司 WASHER 8-35-5

- MATERIAL: NYLON 66(UL)
- FLAME CLASS: 94V-0/94V-2
- COLOR: BLACK

PART NO	A	B	C	PACKAGE
UWQ-2M	2.5	ø5.5	ø4.1	1000

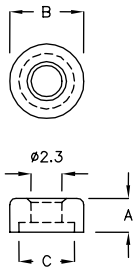

华司 WASHER 8-36-1

- MATERIAL: NYLON 66(UL)
- FLAME CLASS: 94V-0/94V-2
- COLOR: NATURAL
- WITH COUNTERSUNK SCREW

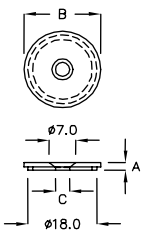

PART NO	A	B	C	PACKAGE
WSA-02	2.1	ø20.0	ø3.7	1000

华司 WASHER 8-36-2

- MATERIAL: NYLON 66(UL)
- FLAME CLASS: 94V-0/94V-2
- COLOR: BLACK
- WITH COUNTERSUNK SCREW

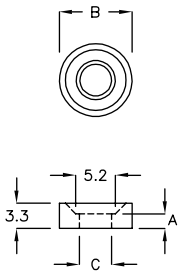

PART NO	A	B	C	PACKAGE
WRB-3A	1.9	ø9.6	ø4.2	2000
WRB-3C	1.9	ø11.5	ø4.2	

华司 WASHER 8-36-3

- MATERIAL: POM
- FLAME CLASS: 94HB
- COLOR: NATURAL

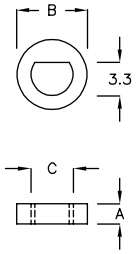

PART NO	A	B	C	PACKAGE
WRF-02	2.0	ø7.0	ø4.2	1000

华司 WASHER 8-36-4

- MATERIAL: NYLON 66(UL)
- FLAME CLASS: 94V-0/94V-2
- COLOR: NATURAL
- WITH COUNTERSUNK SCREW

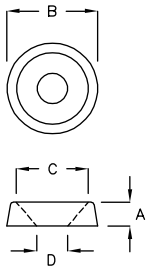

PART NO	A	B	C	D	USE SCREW	PACKAGE
UWM-03	2.5	ø9.6	ø6.3	ø3.1	M3	2000
UWM-04	2.7	ø11.6	ø8.4	ø4.1	M4	
UWM-05	3.2	ø13.6	ø10.4	ø5.1	M5	
UWS-11	2.55	ø11.0	ø8.0	ø3.9	NO. 6-32UNC	
UWS-13	2.9	ø13.0	ø9.4	ø4.4	NO. 8-32UNC	
UWS-14	3.85	ø14.7	ø11.6	ø5.0	NO. 10-24UNC	1000
UWS-15	4.0	ø15.4	ø12.7	ø5.8	NO. 12-24UNC	
UWS-17	4.65	ø17.3	ø14.5	ø6.5	1/4-20UNC	

华司 WASHER 8-36-5

- MATERIAL: NYLON 66(UL)
- FLAME CLASS: 94V-0/94V-2
- COLOR: BLACK

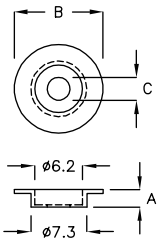

PART NO	A	B	C	PACKAGE
WSA-01	2.4	ø11.5	ø3.0	2000

固定座 MOUNT 8-37-1

- MATERIAL: NYLON 66(UL)
- FLAME CLASS: 94V-0/94V-2
- COLOR: NATURAL

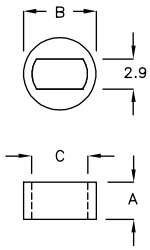

PART NO	A	B	C	PACKAGE
UWF-3PQ	3.6	ø7.0	ø5.4	2000
UWF-05	5.0	ø7.0	ø5.3	

华司 WASHER 8-37-2

- MATERIAL: NYLON 66(UL)
- FLAME CLASS: 94V-0/94V-2
- COLOR: NATURAL

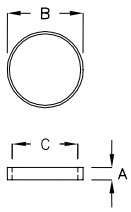

PART NO	A	B	C	PACKAGE
UWXC-12A	2.2	ø13.5	ø12.7	1000

华司 WASHER 8-37-3

- MATERIAL: NYLON 66(UL)
- FLAME CLASS: 94V-0/94V-2
- COLOR: BLACK

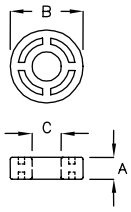

PART NO	A	B	C	PACKAGE
WSC-01	4.5	ø15.0	ø6.0	1000
WSC-1A	5.7	ø15.0	ø6.0	

华司 WASHER 8-37-4

- MATERIAL: NYLON 66(UL)
- FLAME CLASS: 94V-0/94V-2
- COLOR: BLACK

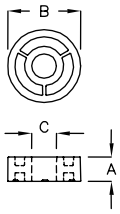

PART NO	A	B	C	PACKAGE
WSC-30KP	10.0	ø30.0	ø10.0	200

华司 WASHER 8-37-5

- MATERIAL: NYLON 66(UL)
- FLAME CLASS: 94V-0/94V-2
- COLOR: NATURAL

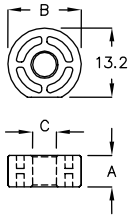

PART NO	A	B	C	PACKAGE
WSC-06	6.0	ø14.0	ø4.6	1000

华司 WASHER 8-38-1

- MATERIAL: NYLON 66(UL)
- FLAME CLASS: 94V-0/94V-2
- COLOR: NATURAL

PART NO	A	B	C	PACKAGE
WWF-4K	3.1	ø12.0	ø4.35	2000

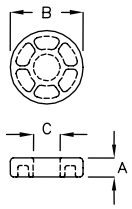

华司 WASHER 8-38-2

- MATERIAL: NYLON 66(UL)
- FLAME CLASS: 94V-0/94V-2
- COLOR: NATURAL,BLACK

PART NO	A	B	C	D	E	PACKAGE
WSL-01	2.5	ø10.0	ø4.1	ø8.1	ø8.7	2000
WSL-02	1.5	ø7.0	ø3.1	ø5.1	ø5.7	

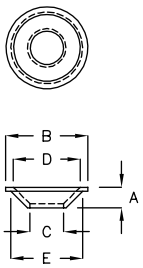

华司 WASHER 8-38-3

- MATERIAL: NYLON 66(UL)
- FLAME CLASS: 94V-0/94V-2
- COLOR: BLACK

PART NO	A	B	C	PACKAGE
WSB-01	5.0	ø10.0	ø5.4	1000

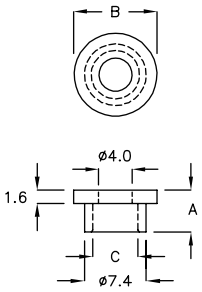

华司 WASHER 8-38-4

- MATERIAL: NYLON 66(UL)
- FLAME CLASS: 94V-0/94V-2
- COLOR: BLACK

PART NO	A	B	C	PACKAGE
WSJ-01	3.4	ø13.0	ø6.3	2000

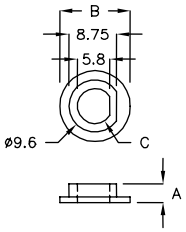

华司 WASHER 8-38-5

- MATERIAL: NYLON 66(UL)
- FLAME CLASS: 94V-0/94V-2
- COLOR: BLACK

PART NO	A	B	C	D	PACKAGE
MIA-03	9.0	ø17.9	ø8.1	3.0	500
MIA-04	10.0	ø17.9	ø8.0	4.0	

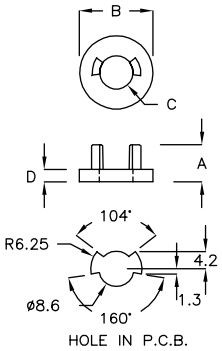

华司 WASHER 8-39-1

- MATERIAL: NYLON 66(UL)
- FLAME CLASS:94V-0/94V-2
- COLOR: NATURAL

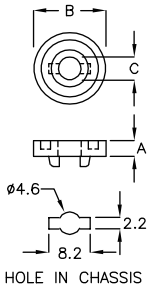

PART NO	A	B	C	PACKAGE
WST-14	3.0	ø14.0	ø4.5	500

华司 WASHER 8-39-2

- MATERIAL: NYLON 66(UL)
- FLAME CLASS: 94V-0/94V-2
- COLOR: NATURAL

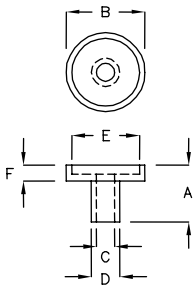

PART NO	A	B	C	D	E	F	PACKAGE
WSQ-01	10.0	ø14.0	ø3.2	ø5.0	ø12.0	2.8	1000
WSQ-03	7.3	ø7.0	ø3.0	ø3.5	ø6.1	3.8	

华司 WASHER 8-39-3

- MATERIAL: POM
- FLAME CLASS: 94HB
- COLOR: NATURAL

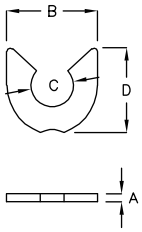

PART NO	A	B	C	D	PACKAGE
WU-1	0.8	12.6	ø5.9	11.5	2000
WU-002	0.6	9.5	ø4.1	8.9	

华司 WASHER 8-39-4

- MATERIAL: NYLON 66(UL)
- FLAME CLASS: 94V-0/94V-2
- COLOR: NATURAL

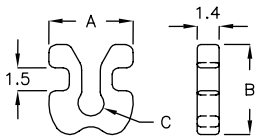

PART NO	A	B	C	PACKAGE
WUS-1A	5.5	5.84	ø1.7	2000

华司 WASHER 8-39-5

- MATERIAL: NYLON 66(UL)
- FLAME CLASS: 94V-0/94V-2
- COLOR: NATURAL

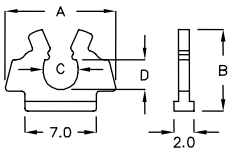

PART NO	A	B	C	D	PACKAGE
WSM-01	10.8	8.0	3.3	2.9	2000

华司 WASHER 8-40-1

- MATERIAL: NYLON 66(UL)
- FLAME CLASS: 94V-0/94V-2
- COLOR: NATURAL

PART NO	A	B	C	D	PACKAGE
WSU-01	8.0	3.6	ø3.3	1.6	2000

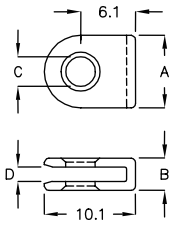

防震华司 SHOCK-ABSORB WASHER 8-40-2

- MATERIAL: TPE
- COLOR: GRAY
- WITH M2.6 SCREW

PART NO	A	B	C	PACKAGE
GSG-01	ø9.6	1.75	ø2.5	2000

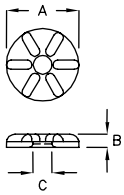

防震华司 SHOCK-ABSORB WASHER 8-40-3

- MATERIAL: SILICONE
- COLOR: BLACK

PART NO	A	B	C	PACKAGE
GSG-03	ø8.6	3.0	ø3.74	2000

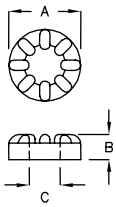

华司 WASHER 8-40-4

- MATERIAL: NYLON 66(UL)
- FLAME CLASS: 94V-0/94V-2
- COLOR: NATURAL

PART NO	A	B	C	D	PACKAGE
WSN-2A	ø6.3	2.6	ø2.3	ø4.3	2000

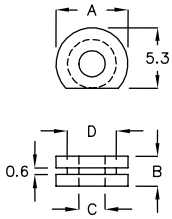

防震华司 SHOCK-ABSORB WASHER 8-40-5

- MATERIAL: TPE
- COLOR: BLACK

PART NO	A	B	C	D HOLE IN CHASSIS	E	PACKAGE
GLH-2A	ø10.3	4.7	ø5.5	ø8.0	1.4	2000
GLH-12MP	ø12.0	4.9	ø6.2	ø8.2	1.8	

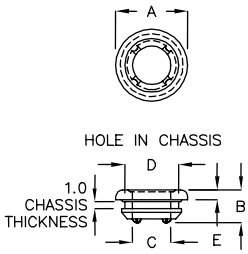

防震华司 SHOCK-ABSORB WASHER 8-41-1

- MATERIAL: TPE
- COLOR: BLACK

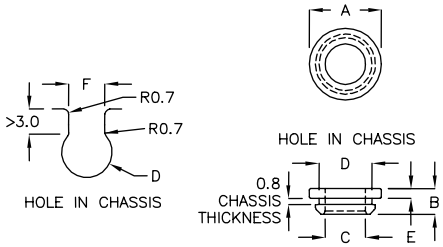

PART NO	A	B	C	D HOLE IN CHASSIS	E	F	PACKAGE
GLH-10CT	ø10.0	4.1	ø4.55	ø7.0	1.6	5.0	2000
GLH-3WD	ø11.0	3.9	ø6.4	ø8.1	1.5	6.0	

防震华司 SHOCK-ABSORB WASHER 8-41-2

- MATERIAL: TPE
- COLOR: BLACK

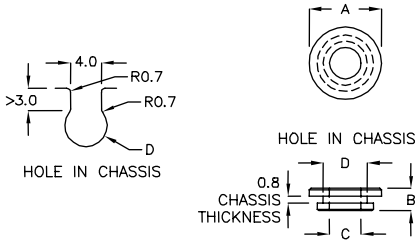

PART NO	A	B	C	D HOLE IN CHASSIS	PACKAGE
GQH-9AT	ø9.0	2.8	ø3.9	ø5.5	2000

防震华司 SHOCK-ABSORB WASHER 8-41-3

- MATERIAL: TPE
- COLOR: BLACK

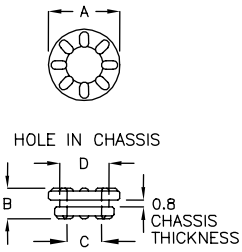

PART NO	A	B	C	D HOLE IN CHASSIS	PACKAGE
GSQ-8AC	ø8.0	3.4	ø3.9	ø5.5	2000

防震华司 SHOCK-ABSORB WASHER 8-41-4

- MATERIAL: TPE
- COLOR: BLACK

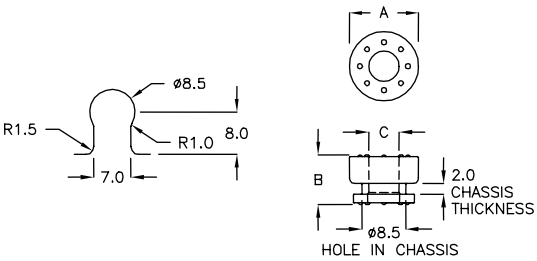

PART NO	A	B	C	PACKAGE
GSK-13A	ø13.0	9.35	ø5.6	1000

返回图片索引

防震华司 SHOCK-ABSORB WASHER 8-42-1

- MATERIAL: TPR,TPE,SILICONE
- COLOR: BLACK

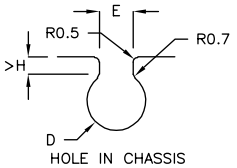

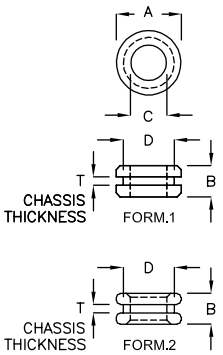

PART NO	MATERIAL	A	B	C	D	E	H	T CHASSIS THICKNESS	FORM	PACKAGE
WSS-02C	TPR	ø7.0	2.8	ø3.9	ø5.5	4.0	1.6	0.8	1	2000
WSS-03A	SILICONE	ø7.0	3.4	ø3.9	ø5.5	4.0	1.6	0.8	2	
WSS-3RK	SILICONE	ø8.2	3.8	ø4.0	ø6.0	4.0	2.0	0.8	3	
WSS-07	TPE	ø7.0	5.0	ø3.9	ø5.5	4.0	1.6	0.8	1	
WSS-5GD	TPE	ø5.0	4.0	ø2.5	ø4.0	3.0	1.5	1.0	2	
WSS-10CQ	SILICONE	ø10.0	5.35	ø4.0	ø6.0	4.0	3.0	1.2	3	1000

防震华司 SHOCK-ABSORB WASHER 8-42-2

- MATERIAL: TPE
- COLOR: BLACK

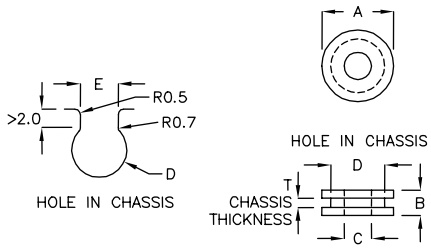

PART NO	A	B	C	D HOLE IN CHASSIS	E	T CHASSIS THICKNESS	PACKAGE
GSH-12RT	ø12.0	6.0	ø3.9	ø7.5	6.5	1.0	1000
GSH-12AP	ø12.0	9.0	ø6.0	ø9.0	8.0	1.0	
GSH-12	ø12.7	4.4	ø4.8	ø9.5	8.5	1.6	

防震华司 SHOCK-ABSORB WASHER 8-42-3

- MATERIAL: TPE
- COLOR: BLACK

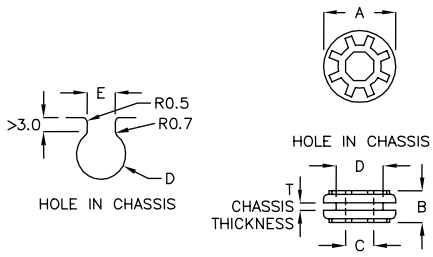

PART NO	A	B	C	D HOLE IN CHASSIS	E	T CHASSIS THICKNESS	PACKAGE
GSA-2C	ø16.0	7.0	6.3	ø10.5	9.0	1.6	500
GSA-2D	ø20.0	14.0	6.3	ø14.7	13.2	1.6	200

防震华司 SHOCK-ABSORB WASHER 8-43-1

- MATERIAL: TPE
- COLOR: BLACK

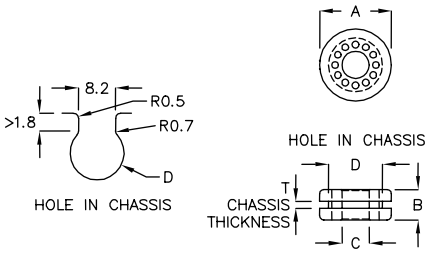

PART NO	A	B	C	D HOLE IN CHASSIS	T CHASSIS THICKNESS	PACKAGE
GSA-2H	ø12.7	5.4	ø4.8	ø9.2	1.0	1000

防震华司 SHOCK-ABSORB WASHER 8-43-2

- MATERIAL: TPE
- COLOR: BLACK

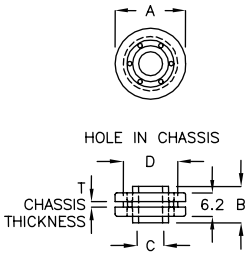

PART NO	A	B	C	D HOLE IN CHASSIS	T CHASSIS THICKNESS	PACKAGE
GSD-01	ø18.8	9.7	ø6.3	ø14.4	1.4	200

防震华司 SHOCK-ABSORB WASHER 8-43-3

- MATERIAL: TPE
- COLOR: BLACK

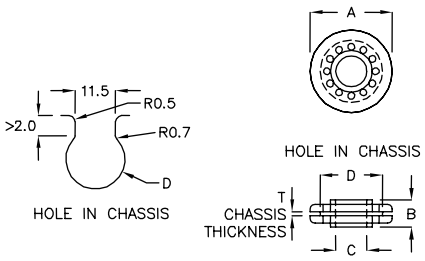

PART NO	A	B	C	D HOLE IN CHASSIS	T CHASSIS THICKNESS	PACKAGE
GSA-1A	ø16.5	5.45	ø6.2	ø12.5	0.85	500
GSA-2A	ø16.5	6.5	ø6.6	ø12.5	1.6	

防震华司 SHOCK-ABSORB WASHER 8-43-4

- MATERIAL: TPE
- COLOR: BLACK

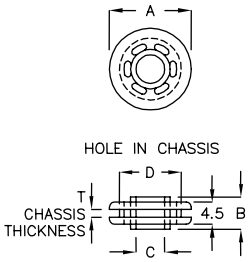

PART NO	A	B	C	D HOLE IN CHASSIS	T CHASSIS THICKNESS	PACKAGE
GSE-16A	ø16.5	6.5	ø5.8	ø12.5	1.6	500

返回图片索引

防震华司 SHOCK-ABSORB WASHER 8-44-1

- MATERIAL: TPE
- COLOR: BLACK

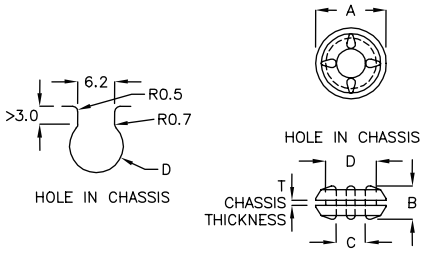

PART NO	A	B	C	D HOLE IN CHASSIS	T CHASSIS THICKNESS	PACKAGE
GSA–03	ø11.2	5.3	ø4.6	ø8.0	0.8	2000

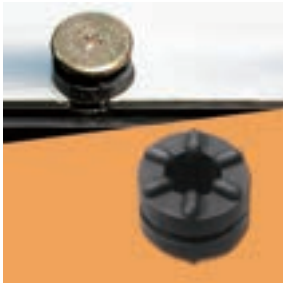

防震华司 SHOCK-ABSORB WASHER 8-44-2

- MATERIAL: SILICONE
- COLOR: BLACK

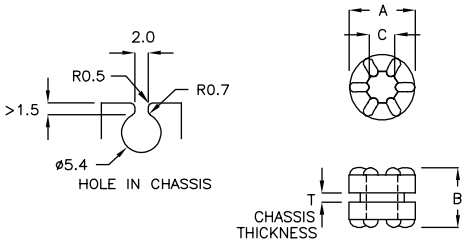

PART NO	A	B	C	T CHASSIS THICKNESS	PACKAGE
GSA–08	ø8.6	7.8	ø3.3	0.6~1.0	2000

防震华司 SHOCK-ABSORB WASHER 8-44-3

- MATERIAL: TPE,SILICONE
- COLOR: BLACK

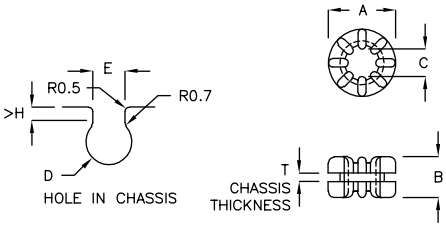

PART NO	MATERIAL	A	B	C	D	E	H	T CHASSIS THICKNESS	PACKAGE
GSA–7A	TPE	ø7.2	5.1	ø4.2	ø6.0	5.0	1.5	0.8	1000
GSA–8LM	TPE	ø7.8	4.5	ø4.0	ø5.8	4.2	1.5	1.0	2000
GSA–8QT	TPE	ø8.6	7.8	ø3.3	ø5.4	3.5	1.5	0.6~1.0	
GSA–010	TPE	ø9.6	5.8	ø3.9	ø6.3	5.0	1.8	1.2	1000
GSA–09	TPE	ø9.6	7.6	ø4.0	ø6.4	5.0	1.8	3.2	
GSA–9KP	TPE	ø9.6	4.6	ø4.3	ø6.5	5.0	1.9	1.0	
GSA–9SQ	TPE	ø9.6	5.8	ø3.9	ø6.3	5.0	4.5	0.8	
GSA–10A	TPE	ø9.6	5.8	ø3.9	ø6.3	5.0	4.5	1.0	
GSA–04	SILICONE	ø14.3	7.95	ø5.0	ø9.5	7.5	3.0	1.0	
GSA–14	TPE	ø14.3	8.2	ø4.7	ø9.5	7.5	3.0	1.6	
GSA–14A	TPE	ø14.3	9.5	ø5.6	ø9.5	7.5	3.0	3.2	

防震华司 SHOCK-ABSORB WASHER 8-45-1

- MATERIAL: TPE
- COLOR: BLACK

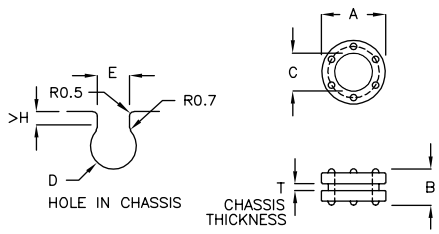

PART NO	A	B	C	D	E	H	T CHASSIS THICKNESS	PACKAGE
GSM-9F	ø9.5	5.4	ø5.6	ø7.5	6.1	1.8	1.0	1000

防震华司 SHOCK-ABSORB WASHER 8-45-2

- MATERIAL: TPE
- COLOR: BLACK

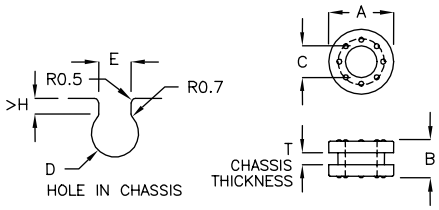

PART NO	A	B	C	D	E	H	T CHASSIS THICKNESS	PACKAGE
GSM-11K	ø11.5	6.8	ø5.6	ø8.4	7.0	2.8	2.0	500

防震华司 SHOCK-ABSORB WASHER 8-45-3

- MATERIAL: TPE
- COLOR: BLACK

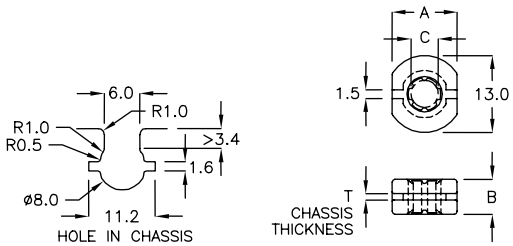

PART NO	A	B	C	T CHASSIS THICKNESS	PACKAGE
GSB-13K	11.0	5.9	ø4.6	1.0	1000

防震华司用螺丝 SCREW 8-45-4

- MATERIAL: STEEL PLATING NI
- COLOR: SILVER
- D: SCREW

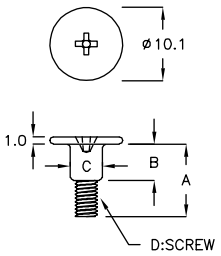

PART NO	A	B	C	D	PACKAGE
SWA-05	9.8	5.0	ø4.4	M3	2000
SWA-5DA	9.8	5.0	ø4.4	#6-32	
SWA-5F	11.0	5.0	ø4.4	M3	

ASSEMBLE WITH P.G PART GSA-010 (Page 8-44-3)

防震华司用螺丝 SCREW 8-46-1

- MATERIAL: STEEL PLATING NI
- COLOR: SILVER
- D: SCREW

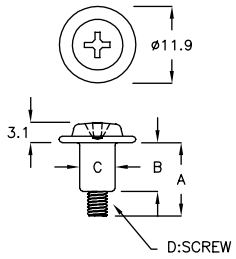

PART NO	A	B	C	D	PACKAGE
SWA-7A	11.3	7.5	ø5.4	M3	1000

A SSEMBLE WITH P.G PART GSA-04(Page 8-44-3)

晶体管垫片 TRANSISTOR WASHER 8-46-2

- MATERIAL: NYLON 66(UL)
- FLAME CLASS: 94V-0/94V-2
- COLOR: NATURAL

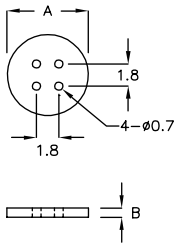

PART NO	A	B	PACKAGE
TRC-201	ø6.5	0.75	2000

晶体管垫片 TRANSISTOR WASHER 8-46-3

- MATERIAL: NYLON 66(UL)
- FLAME CLASS: 94V-0/94V-2
- COLOR: NATURAL

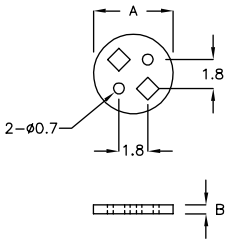

PART NO	A	B	PACKAGE
TRC-202	ø5.0	0.75	2000

晶体管垫片 TRANSISTOR WASHER 8-46-4

- MATERIAL: NYLON 66(UL)
- FLAME CLASS: 94V-0/94V-2
- COLOR: NATURAL

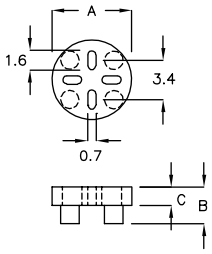

PART NO	A	B	C	PACKAGE
TRC-301	ø6.5	3.0	1.5	2000
TRC-301M	ø6.5	1.6	1.0	

晶体管垫片 TRANSISTOR WASHER 8-46-5

- MATERIAL: NYLON 66(UL)
- FLAME CLASS: 94V-0/94V-2
- COLOR: NATURAL

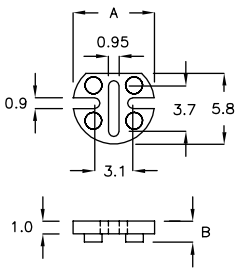

PART NO	A	B	PACKAGE
TRC-301S	ø6.5	1.7	2000

晶体管垫片 TRANSISTOR WASHER 8-47-1

- MATERIAL: NYLON 66(UL)
- FLAME CLASS: 94V-0/94V-2
- COLOR: BLACK

PART NO	A	B	PACKAGE
TRC-302	ø6.0	5.0	2000

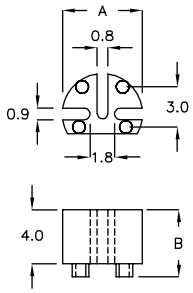

晶体管垫片 TRANSISTOR WASHER 8-47-2

- MATERIAL: NYLON 66(UL)
- FLAME CLASS: 94V-0/94V-2
- COLOR: NATURAL

PART NO	A	B	PACKAGE
TRC-501	ø8.9	3.0	2000
TRC-501A	ø8.9	4.5	

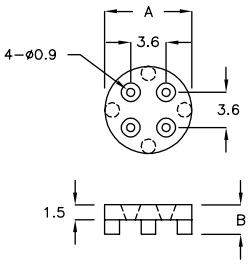

晶体管垫片 TRANSISTOR WASHER 8-47-3

- MATERIAL: NYLON 66(UL)
- FLAME CLASS: 94V-0/94V-2
- COLOR: NATURAL

PART NO	A	B	PACKAGE
TRC-601	ø12.0	1.2	2000

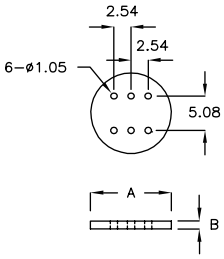

晶体管垫片 TRANSISTOR WASHER 8-47-4

- MATERIAL: PBT(UL)
- FLAME CLASS: 94V-0
- COLOR: BLACK

PART NO	A	B	PACKAGE
TRA-3A	ø6.4	3.4	2000

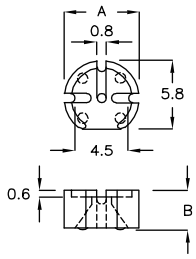

热释电红外线传感器座 PIR HOLDER 8-47-5

- MATERIAL: NYLON 66(UL)
- FLAME CLASS: 94V-0/94V-2
- COLOR: BLACK

PART NO	A	PACKAGE
TQJ-04	ø11.0	500

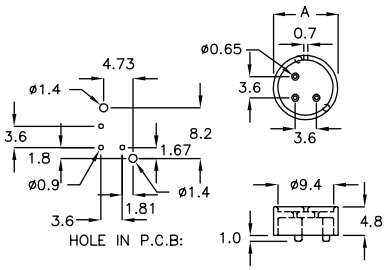

返回图片索引

热释电红外线传感器座 PIR HOLDER 8-48-1

- MATERIAL: PPS(UL)
- FLAME CLASS: 94V-0
- COLOR: BLACK

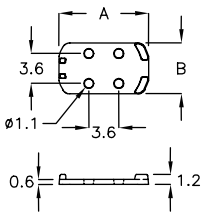

PART NO	A	B	PACKAGE
TQP-10C	10.7	6.15	2000

华司 WASHER 8-48-2

- MATERIAL: NYLON 66(UL)
- FLAME CLASS: 94V-0/94V-2
- COLOR: NATURAL

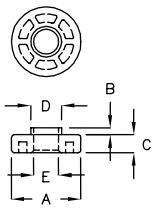

PART NO	A	B	C	D	E	PACKAGE
WSG-6C	ø12.0	1.2	3.1	ø5.3	ø4.3	2000

华司 WASHER 8-48-3

- MATERIAL: NYLON 66(UL)
- FLAME CLASS: 94V-0/94V-2
- MATERIAL: POM(UL),TPE
- COLOR: NATURAL,BLACK

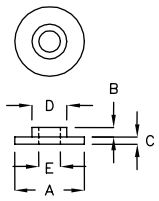

PART NO	MATERIAL	COLOR	A	B	C	D	E	PACKAGE
WSG-04	N66	NATURAL	ø5.6	0.6	0.8	ø3.85	ø2.9	2000
WSG-9Q	N66	NATURAL	ø7.2	0.7	1.0	ø5.2	ø3.2	
WSG-9C	POM	NATURAL	ø9.0	1.5	1.0	ø6.3	ø4.5	
WSG-01	N66	NATURAL	ø10.0	1.8	1.0	ø5.0	ø3.1	
WSG-02	TPE	BLACK	ø10.0	1.8	1.0	ø5.5	ø4.0	
WSG-10BD	N66	BLACK	ø10.0	2.0	1.2	ø7.0	ø4.3	1000
WSG-11B	N66	NATURAL	ø10.9	2.3	1.3	ø6.8	ø2.95	2000
WSG-06	N66	NATURAL	ø12.0	3.0	3.2	ø6.2	ø3.0	
WSG-6A	N66	NATURAL	ø12.0	3.0	1.4	ø8.0	ø3.0	
WSG-12CR	N66	NATURAL	ø12.7	0.8	0.8	ø6.2	ø4.4	
WSG-05	N66	NATURAL	ø12.85	0.8	1.6	ø9.5	ø6.4	
WSG-07	N66	NATURAL	ø13.0	5.0	1.5	ø8.2	ø3.0	
WSG-10M	N66	NATURAL	ø13.0	2.4	1.7	ø7.9	ø6.6	

华司 WASHER 8-48-4

- MATERIAL: PPO(UL)
- FLAME CLASS: 94V-1
- COLOR: GRAY
- ADHESIVE TAPE: 3M

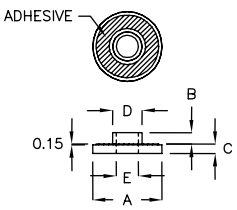

PART NO	A	B	C	D	E	PACKAGE
WSI-20P	ø20.0	3.35	2.65	ø8.4	ø6.4	1000

华司 WASHER 8-49-1

- MATERIAL: NYLON 66(UL)
- FLAME CLASS: 94V-0/94V-2
- COLOR: BLACK

PART NO	A	B	C	D	E	PACKAGE
WSGT-10F	ø10.0	1.3	0.8	4.05	ø3.45	1000

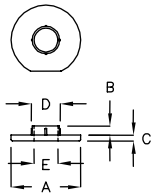

华司 WASHER 8-49-2

- MATERIAL: NYLON 66(UL)
- FLAME CLASS: 94V-0/94V-2
- COLOR: BLACK

PART NO	A	B	C	D	E	PACKAGE
WSGB-20A	ø20.0	3.5	4.5	ø15.8	ø10.2	1000

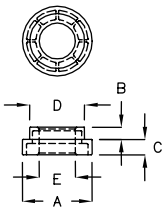

华司 WASHER 8-49-3

- MATERIAL: NYLON 66(UL)
- FLAME CLASS: 94V-0/94V-2
- COLOR: NATURAL

PART NO	A	B	C	D	E	PACKAGE
WSG-03	ø16.0	1.0	0.85	ø11.0	ø9.7	2000

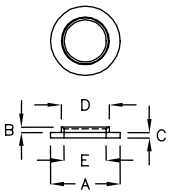

华司 WASHER 8-49-4

- MATERIAL: POM(UL)
- FLAME CLASS: 94HB
- COLOR: NATURAL

PART NO	A	D	E1	E2	PACKAGE
WSG-6F	ø12.55	ø11.5	ø9.3	ø8.1	2000
WSG-8A	ø12.35	ø11.4	ø9.35	ø8.15	

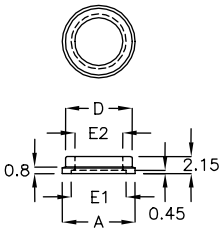

晶体管垫片 TRANSISTOR WASHER 8-49-5

- MATERIAL: NYLON 66(UL)
- FLAME CLASS: 94V-0/94V-2
- COLOR: NATURAL

PART NO	A	B	C	PACKAGE
821	ø21.0	4.6	1.6	500

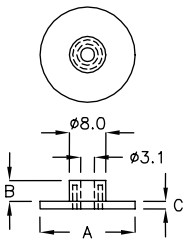

华司 WASHER 8-50-1

- MATERIAL: NYLON 66(UL)
- FLAME CLASS: 94V-0/94V-2
- COLOR: NATURAL

PART NO	A	B	C	D	E	PACKAGE
WWA-01	ø10.0	7.1	0.9	ø6.6	ø5.2	1000

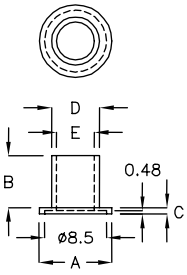

华司 WASHER 8-50-2

- MATERIAL: NYLON 66(UL)
- FLAME CLASS: 94V-0/94V-2
- COLOR: NATURAL,BLACK

PART NO	A	B	C	D	E	PACKAGE
WSE-01	ø10.0	4.0	1.0	ø5.0	ø4.0	2000
WSE-02	ø15.8	3.8	1.5	ø8.6	ø6.5	
WSE-03	ø15.9	4.3	1.0	ø8.6	ø6.5	

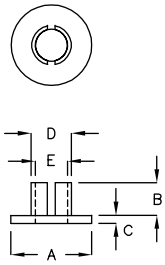

华司 WASHER 8-50-3

- MATERIAL: NYLON 66(UL)
- FLAME CLASS: 94V-0/94V-2
- COLOR: BLACK
- WITH COUNTERSUNK SCREW

PART NO	A	B	C	PACKAGE
WSNA-25K	ø25.3	3.95	2.5	500

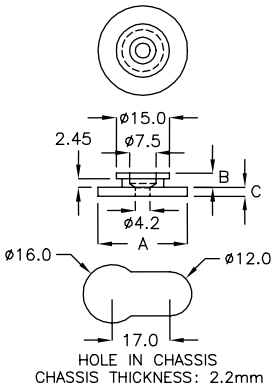

电感保护罩 INSULATED CAP 8-50-4

- MATERIAL: NYLON 66(UL)
- FLAME CLASS: 94V-0/94V-2
- COLOR: BLACK

PART NO	A	B	PACKAGE
CAP-01	13.0	ø13.0	500

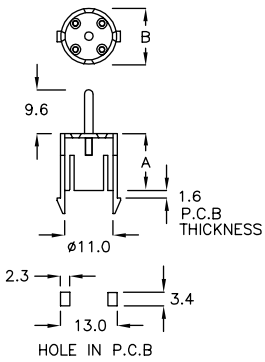

晶体管垫片 TRANSISTOR WASHER 8-50-5

- MATERIAL: PPS(UL)
- FLAME CLASS: 94V-0
- COLOR: BLACK

PART NO	A	B	C	D	E	PACKAGE
40M-2H	ø4.2	0.5	1.7	ø2.9	ø2.05	2000
★ 40M-2FC	ø4.2	1.0	1.6	ø2.9	ø2.05	

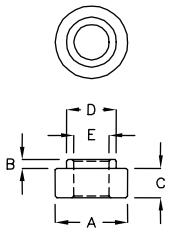

晶体管垫片 TRANSISTOR WASHER 8-51-1

- MATERIAL: NYLON 66(UL)
- FLAME CLASS: 94V-0/94V-2
- COLOR: NATURAL
- WITH COUNTERSUNK SCREW

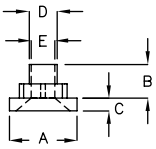

PART NO	A	B	C	D	E	PACKAGE
60M−16	ø8.5	4.35	1.6	ø3.5	ø3.0	2000

晶体管垫片 TRANSISTOR WASHER 8-51-2

- MATERIAL: NYLON 66(UL)
- FLAME CLASS: 94V-0/94V-2
- COLOR: NATURAL

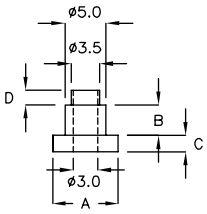

PART NO	A	B	C	D	PACKAGE
807	ø8.0	3.7	2.0	1.8	2000
807S	ø8.0	2.9	2.0	1.8	

晶体管垫片 TRANSISTOR WASHER 8-51-3

- MATERIAL: PPS(UL)
- FLAME CLASS: 94V-0
- COLOR: BLACK

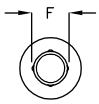

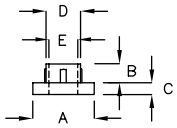

PART NO	A	B	C	D	E	F	PACKAGE
60T−12	ø6.4	2.0	1.2	3.7	3.0	3.76	2000
60T−20	ø6.4	2.0	1.2	3.6	3.0	3.86	

晶体管垫片 TRANSISTOR WASHER 8-51-4

- MATERIAL: NYLON 46(UL)
- FLAME CLASS: 94V-0/94V-2
- COLOR: BLACK

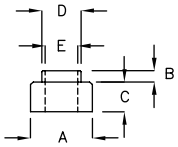

PART NO	A	B	C	D	E	PACKAGE
60K−29	ø6.0	1.1	2.9	ø3.8	ø3.2	2000
60K−28C	ø6.0	1.0	2.8	ø3.8	ø3.2	
602−46−1	ø6.1	1.6	1.4	ø3.5	ø3.0	

晶体管垫片 TRANSISTOR WASHER 8-51-5

- MATERIAL: NYLON 66(UL)
- FLAME CLASS: 94V-0/94V-2
- COLOR: NATURAL

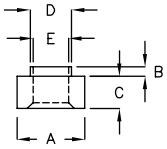

PART NO	A	B	C	D	E	PACKAGE
603FK	ø6.0	0.8	2.8	ø3.6	ø3.1	2000

返回图片索引

晶体管垫片 TRANSISTOR WASHER 8-52-1

- MATERIAL: PPS(UL)
- FLAME CLASS: 94V-0
- COLOR: BLACK

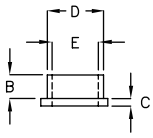

PART NO	A	B	C	D	E	PACKAGE
603QT	ø4.4	1.5	0.5	ø3.55	ø2.95	2000

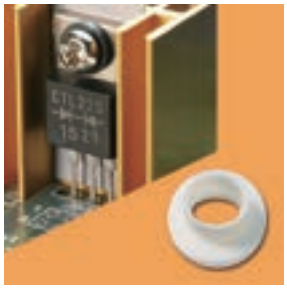

晶体管垫片 TRANSISTOR WASHER 8-52-2

- MATERIAL: NYLON 66(UL)
- FLAME CLASS: 94V-0/94V-2
- OPTIONAL MATERIAL:
  NYLON 46(UL), PPS(UL)
- FLAME CLASS: 94V-0
- COLOR: NATURAL, BLACK

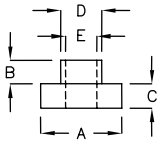

PART NO	A	B	C	D	E	PACKAGE
601A	ø3.6	2.8	1.0	ø3.0	ø1.8	2000
601C	ø3.6	2.8	1.0	ø3.0	ø2.0	
601	ø4.6	2.4	1.2	ø3.0	ø2.3	
603GK	ø4.7	3.25	0.7	ø3.55	ø3.0	
601W	ø5.0	1.0	0.8	ø3.0	ø2.0	
601M	ø5.0	1.7	1.0	ø3.0	ø2.2	
604PH	ø5.0	2.4	1.9	ø3.1	ø2.5	
602YH	ø5.0	1.6	1.3	ø3.5	ø3.0	
603NJ	ø5.0	2.0	1.9	ø3.5	ø3.0	
603QH	ø5.0	2.4	1.9	ø3.5	ø3.0	
601S	ø5.4	0.8	1.0	ø3.4	ø2.9	
601Q	ø5.5	2.16	1.04	ø3.64	ø2.56	
601R	ø5.7	1.75	0.95	ø3.55	ø2.95	
603	ø5.9	2.2	1.9	ø3.55	ø2.95	
601J	ø6.0	0.9	2.5	ø3.0	ø2.2	
601H	ø6.0	4.0	1.5	ø3.0	ø2.5	
601D	ø6.0	4.5	1.0	ø3.0	ø2.5	
602HC	ø6.0	1.6	1.3	ø3.5	ø2.95	
603D	ø6.0	2.5	1.2	ø3.5	ø2.7	
604P	ø6.0	2.54	2.0	ø3.5	ø2.88	
605A	ø6.0	5.7	1.2	ø3.5	ø2.95	
602S	ø6.0	1.2	1.3	ø3.55	ø2.95	
602	ø6.0	1.6	1.3	ø3.55	ø2.95	
602Y	ø6.0	1.6	1.3	ø3.55	ø3.0	
603L	ø6.0	2.0	2.0	ø3.55	ø2.95	
603M	ø6.0	2.3	1.8	ø3.55	ø2.95	
603P	ø6.0	2.3	1.8	ø3.55	ø3.0	
604S	ø6.0	3.1	1.5	ø3.55	ø2.95	
604	ø6.0	3.2	2.0	ø3.55	ø2.95	
608L	ø6.0	7.7	1.0	ø3.55	ø2.95	
605U	ø6.0	1.5	0.5	ø3.6	ø3.0	
602L	ø6.0	1.5	1.5	ø3.6	ø3.0	

PART NO	A	B	C	D	E	PACKAGE
603AG	ø6.1	0.8	2.0	ø3.55	ø2.95	2000
602K	ø6.1	1.4	1.5	ø3.55	ø2.95	
602M	ø6.1	1.5	1.2	ø3.55	ø2.95	
603S	ø6.1	1.5	2.0	ø3.55	ø2.95	
603W	ø6.1	1.5	2.0	ø3.55	ø2.95	
603K	ø6.1	2.0	1.4	ø3.55	ø2.95	
603Y	ø6.1	2.25	2.0	ø3.55	ø2.95	
602MS	ø6.15	1.4	1.2	ø3.55	ø2.95	
602TK	ø6.2	1.2	1.0	ø3.5	ø2.9	
603MK	ø6.2	2.4	1.9	ø3.5	ø3.0	
602W	ø6.2	2.4	1.9	ø3.5	ø3.0	
604HQ	ø6.2	3.1	1.5	ø3.5	ø2.95	
602KD	ø6.2	0.6	1.2	ø3.55	ø2.95	
603U	ø6.2	3.0	1.9	ø3.55	ø3.0	
604V	ø6.2	3.1	1.5	ø3.55	ø2.95	
604C	ø6.2	3.6	1.2	ø3.55	ø2.95	
603A	ø6.2	2.9	1.9	ø3.6	ø2.95	
604K	ø6.22	3.1	1.02	ø3.56	ø2.95	
604M	ø6.3	2.6	2.0	ø3.55	ø2.95	
605AF	ø6.3	1.5	2.5	ø3.9	ø3.2	
605W	ø6.35	2.05	1.0	ø4.1	ø3.15	
605MF	ø6.35	2.05	1.02	ø4.35	ø3.08	
605N	ø6.4	2.0	1.2	ø3.53	ø3.0	
605T	ø6.4	3.0	1.5	ø3.53	ø3.0	
604L	ø6.4	2.0	1.3	ø3.55	ø2.95	
606S	ø6.5	1.7	2.5	ø4.15	ø3.2	
606	ø6.5	1.7	3.0	ø4.25	ø3.2	
603T	ø7.0	2.4	1.3	ø3.55	ø3.0	
605S	ø7.9	1.5	1.0	ø3.6	ø3.0	
605	ø8.0	5.7	1.2	ø3.5	ø2.95	
606A	ø8.0	6.3	1.2	ø3.55	ø2.9	
601F	ø8.0	3.9	0.5	ø6.0	ø3.5	
605K	ø10.0	5.7	2.2	ø3.95	ø2.95	
605F	ø12.0	5.7	2.7	ø3.95	ø2.95	

返回图片索引

晶体管垫片 TRANSISTOR WASHER 8-53-1

- MATERIAL: NYLON 66(UL)
- FLAME CLASS: 94V-0/94V-2
- COLOR: NATURAL
- OPTIONAL MATERIAL:
  NYLON 46(UL), PPS(UL), PBT(UL)
- FLAME CLASS: 94V-0
- COLOR: NATURAL, BLACK

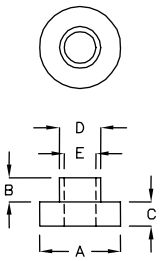

PART NO	A	B	C	D	E	PACKAGE
706A	ø7.0	2.5	1.0	ø3.5	ø3.1	2000
701	ø7.0	4.4	2.0	ø3.55	ø2.95	
706C	ø7.0	1.67	1.06	ø4.5	ø2.35	
706D	ø7.0	1.67	0.81	ø4.5	ø2.35	
703	ø7.0	2.5	2.0	ø5.0	ø2.95	
704A	ø7.0	3.0	1.0	ø5.0	ø4.0	
705	ø7.0	4.0	1.0	ø5.0	ø4.0	
704	ø7.0	5.8	2.0	ø5.0	ø3.0	
702A	ø7.11	0.8	1.2	ø3.68	ø3.0	
805	ø7.8	3.65	1.2	ø5.9	ø3.1	
805A	ø7.9	2.5	1.2	ø5.9	ø3.2	
806H	ø8.0	2.7	1.3	ø3.05	ø2.5	
805C	ø8.0	1.2	4.0	ø3.5	ø3.0	
803A	ø8.0	2.4	1.3	ø3.5	ø2.95	
806F	ø8.0	2.7	1.3	ø3.5	ø2.5	
802	ø8.0	2.5	2.0	ø3.7	ø2.95	
806	ø8.0	1.9	1.45	ø3.9	ø3.2	
801A	ø8.0	0.9	2.0	ø4.4	ø3.2	
801C	ø8.0	0.9	2.0	ø4.65	ø4.0	
804A	ø8.0	5.1	1.0	ø4.55	ø3.65	
804C	ø8.0	0.9	3.2	ø4.65	ø3.1	
804	ø8.0	3.0	3.2	ø4.65	ø3.1	
803	ø8.1	2.7	1.2	ø3.9	ø3.0	
801	ø8.1	0.8	1.0	ø4.9	ø3.1	

PART NO	A	B	C	D	E	PACKAGE
805B	ø8.1	6.65	1.25	ø6.0	ø3.1	2000
808F	ø8.8	2.0	0.8	ø5.0	ø4.1	
807B	ø9.0	3.75	2.0	ø6.0	ø3.0	
808D	ø9.5	1.55	0.8	ø4.95	ø4.35	
808A	ø9.5	1.2	2.0	ø6.2	ø3.8	
808	ø9.6	0.65	1.55	ø6.0	ø3.65	
809	ø10.0	4.0	1.0	ø5.0	ø4.0	
809A	ø10.0	3.0	1.0	ø5.0	ø4.0	
811	ø10.8	3.8	2.0	ø7.9	ø5.3	
811A	ø10.9	7.25	1.1	ø5.0	ø4.0	
813K	ø11.0	3.5	1.5	ø6.9	ø4.3	
812	ø11.8	2.0	2.0	ø5.9	ø3.0	
803K	ø11.8	1.9	0.5	ø6.0	ø4.0	
812C	ø11.8	2.0	1.2	ø5.9	ø3.0	1000
812L	ø11.9	3.0	2.6	ø7.9	ø4.0	
812A	ø12.3	9.0	1.1	ø5.3	ø4.5	
812D	ø12.7	1.6	1.6	ø7.96	ø3.58	
★ 713AN	ø13.0	2.9	3.0	ø7.8	ø4.1	2000
★ 713BK	ø13.0	3.9	3.0	ø7.8	ø4.1	
713	ø13.0	5.9	3.0	ø7.8	ø4.1	
814	ø14.0	18.9	1.3	ø6.6	ø5.1	500
817A	ø15.0	13.0	2.0	ø9.95	ø8.1	
815	ø15.9	1.65	2.0	ø5.9	ø3.1	
901	ø19.2	1.6	3.25	ø12.7	ø9.5	

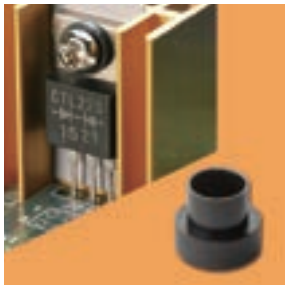

晶体管垫片 TRANSISTOR WASHER 8-53-2

- MATERIAL: PPS(UL)
- FLAME CLASS: 94V-0
- COLOR: BLACK

PART NO	A	B	C	PACKAGE
603RA	ø5.0	2.4	1.9	2000

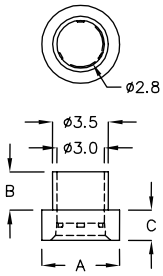

晶体管盖 TRANSISTOR COVER 8-53-3

- MATERIAL: PBT(UL)
- FLAME CLASS: 94V-0
- COLOR: NATURAL

PART NO	A	B	C	PACKAGE
HU-19	29.5	7.5	3.3	1000

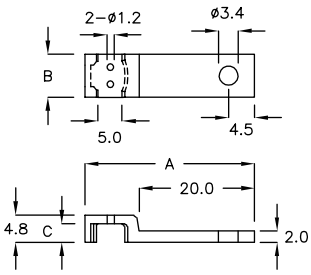

晶体管盖 TRANSISTOR COVER 8-54-1

- MATERIAL: PBT(UL)
- FLAME CLASS: 94V-0
- COLOR: NATURAL

PART NO	A	B	C	PACKAGE
HU-19A	29.5	7.5	3.3	1000

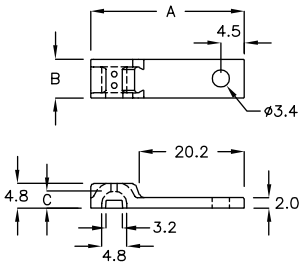

晶体管盖 TRANSISTOR COVER 8-54-2

- MATERIAL: PBT(UL)
- FLAME CLASS: 94V-0
- COLOR: NATURAL

PART NO	A	B	C	F	G	K	PACKAGE
HUK-01	19.0	7.0	3.4	2.0	ø2.4	5.0	1000
HUK-2A	15.0	7.0	3.6	2.0	ø3.2	5.5	

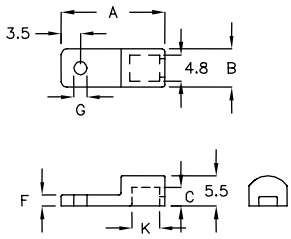

晶体管盖 TRANSISTOR COVER 8-54-3

- MATERIAL: PBT(UL)
- FLAME CLASS: 94V-0
- COLOR: NATURAL

PART NO	A	B	C	PACKAGE
HUK-7Y	15.0	10.0	3.3	1000

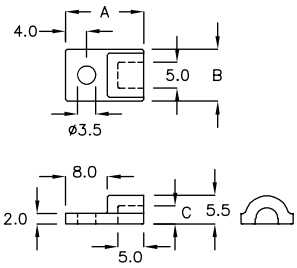

晶体管盖 TRANSISTOR COVER 8-54-4

- MATERIAL: PBT(UL)
- FLAME CLASS: 94V-0
- COLOR: NATURAL

PART NO	A	B	PACKAGE
HU-07T	12.9	12.0	1000

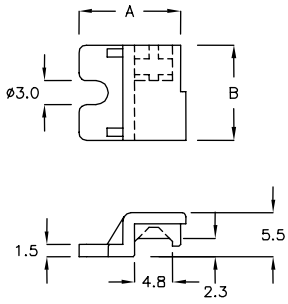

光电耦合器保护盖 OPTICAL COUPLER COVER 8-54-5

- MATERIAL: PC(UL)
- FLAME CLASS: 94V-2
- COLOR: BLACK

PART NO	A	B	C	PACKAGE
HUJ-01	2.5	8.6	5.0	2000
HUJ-1FD	3.0	8.6	5.0	
HUJ-2MK	2.5	11.6	8.0	

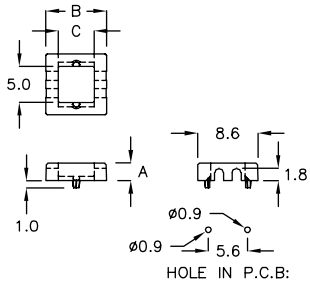

光电耦合器保护盖
OPTICAL COUPLER COVER 8-55-1

- MATERIAL: PC(UL)
- FLAME CLASS: 94V-2
- COLOR: BLACK

PART NO	A	B	PACKAGE
HUJ-3RS	2.5	10.6	1000

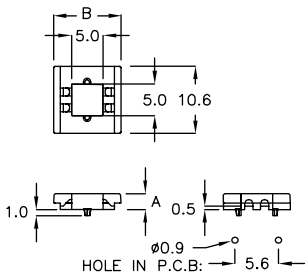

光电耦合器保护盖
OPTICAL COUPLER COVER 8-55-2

- MATERIAL: PC(UL)
- FLAME CLASS: 94V-2
- COLOR: BLACK

PART NO	A	B	PACKAGE
HUJ-2A	2.4	9.4	2000
HUJ-2XY	2.9	9.4	

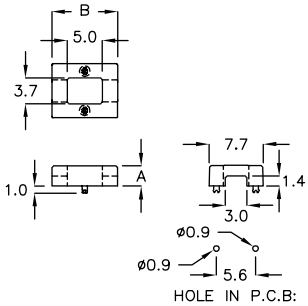

IC 保护盖 IC COVER 8-55-3

- MATERIAL: PC(UL)
- FLAME CLASS: 94V-2
- COLOR: BLACK

PART NO	A	B	C	PACKAGE
MPT-7PN	2.5	7.4	5.5	2000

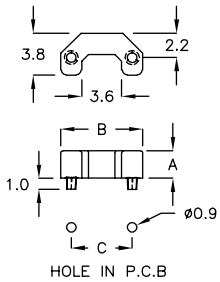

光电耦合器保护盖
OPTICAL COUPLER COVER 8-55-4

- MATERIAL: PC(UL)
- FLAME CLASS: 94V-2
- COLOR: BLACK

PART NO	A	B	PACKAGE
HJA-2D	2.5	8.6	2000

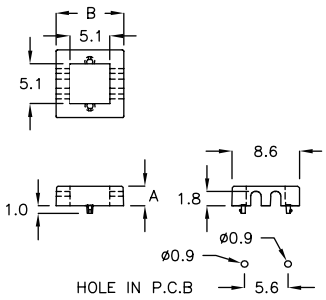

IC 保护盖 IC COVER 8-55-5

- MATERIAL: PC(UL)
- FLAME CLASS: 94V-2
- COLOR: BLACK

PART NO	A	B	PACKAGE
HUJ-4HN	2.2	13.9	1000

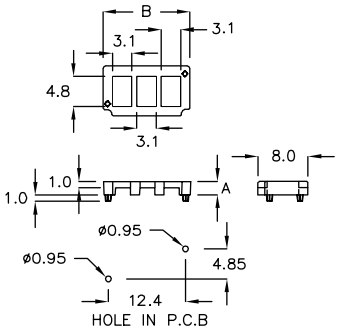

IC 保护盖 IC COVER 8-56-1

- MATERIAL: PC(UL)
- FLAME CLASS: 94V-2
- COLOR: BLACK

PART NO	A	B	PACKAGE
HUJ-4QM	2.2	8.0	1000

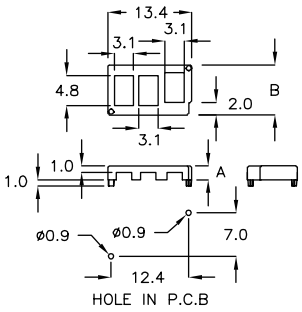

IC 保护盖 IC COVER 8-56-2

- MATERIAL: PC(UL)
- FLAME CLASS: 94V-2
- COLOR: BLACK

PART NO	A	B	PACKAGE
HUJ-4CR	2.2	9.5	1000

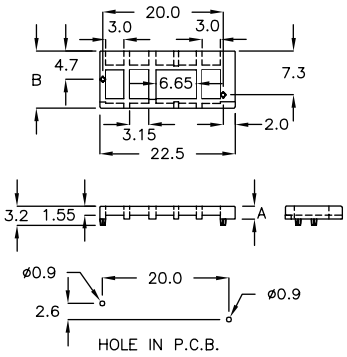

IC 保护盖 IC COVER 8-56-3

- MATERIAL: NYLON 66(UL)
- FLAME CLASS: 94V-0/94V-2
- COLOR: BLACK

PART NO	A	B	PACKAGE
HUT-2CD	2.2	8.2	1000

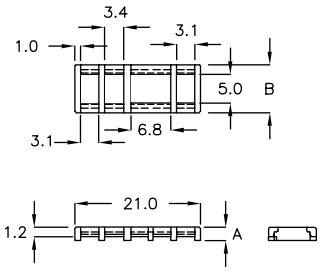

IC 保护盖 IC COVER 8-56-4

- MATERIAL: NYLON 66(UL)
- FLAME CLASS: 94V-0/94V-2
- COLOR: NATURAL

PART NO	A	B	PACKAGE
ICC-16	16.0	12.2	1000

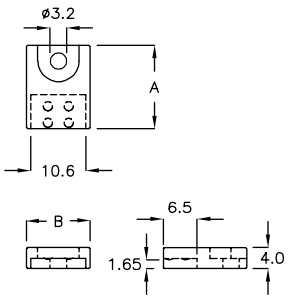

IC 保护盖 IC COVER 8-56-5

- MATERIAL: NYLON 66(UL)
- FLAME CLASS: 94V-0/94V-2
- COLOR: NATURAL

PART NO	A	B	PACKAGE
ICA-20A	20.4	9.3	500

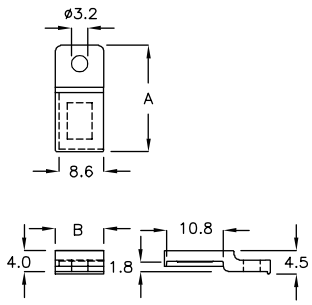

IC 保护盖 IC COVER 8-57-1

- MATERIAL: NYLON 66(UL)
- FLAME CLASS: 94V-0/94V-2
- COLOR: BLACK

PART NO	A	B	PACKAGE
HUQ-16	16.0	8.0	500

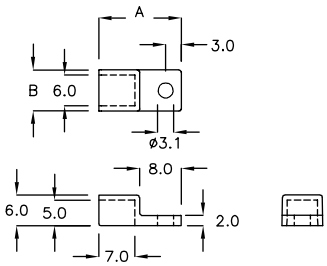

保护盖 HOLE PROTECTOR 8-57-2

- MATERIAL: NYLON 66(UL)
- FLAME CLASS: 94V-0/94V-2
- COLOR: NATURAL

PART NO	A	B	C	PACKAGE
MPR-05	15.1	8.0	6.8	1000

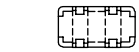

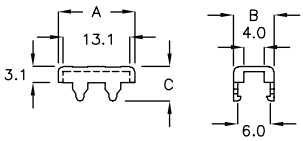

晶体管座 TRANSISTOR HOUSING 8-57-3

- MATERIAL: NYLON 66(UL)
- FLAME CLASS: 94V-0/94V-2
- COLOR: BLACK
- FOR TO-220 TRANSISTOR

PART NO	A	B	C	PACKAGE
TRR-4A	4.1	19.2	10.3	1000

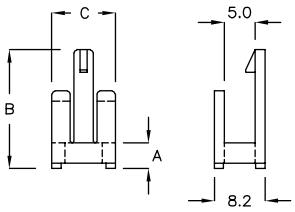

晶体管座 TRANSISTOR HOUSING 8-57-4

- MATERIAL: NYLON 66(UL)
- FLAME CLASS: 94V-0/94V-2
- COLOR: BLACK

PART NO	A	B	C	PACKAGE
TR-01A	3.0	5.0	7.0	2000

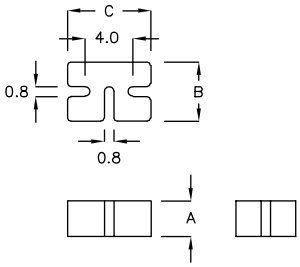

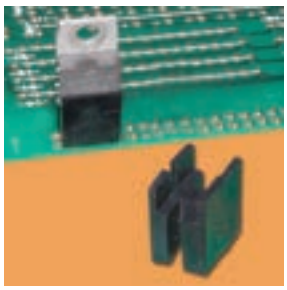

晶体管座 TRANSISTOR HOUSING 8-57-5

- MATERIAL: NYLON 66(UL)
- FLAME CLASS: 94V-0/94V-2
- COLOR: BLACK
- FOR TO-220 TRANSISTOR

PART NO	A	B	C	PACKAGE
TR-01	7.6	10.5	10.0	1000

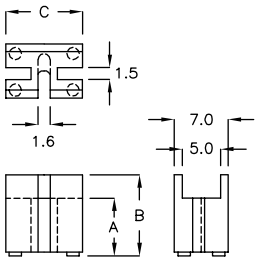

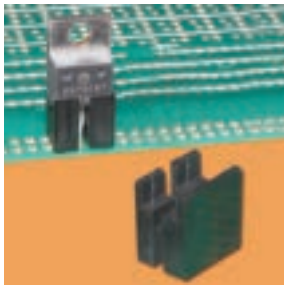

晶体管座 TRANSISTOR HOUSING 8-58-1

- MATERIAL: NYLON 66(UL)
- FLAME CLASS: 94V-0/94V-2
- COLOR: BLACK
- FOR TO-220 TRANSISTOR

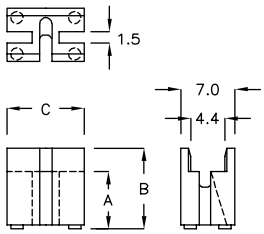

PART NO	A	B	C	PACKAGE
TR-01C	7.5	10.5	10.0	1000

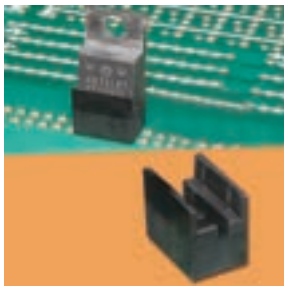

晶体管座 TRANSISTOR HOUSING 8-58-2

- MATERIAL: NYLON 66(UL)
- FLAME CLASS: 94V-0/94V-2
- COLOR: BLACK

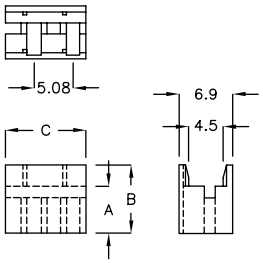

PART NO	A	B	C	PACKAGE
TR-01D	6.1	9.0	10.5	1000

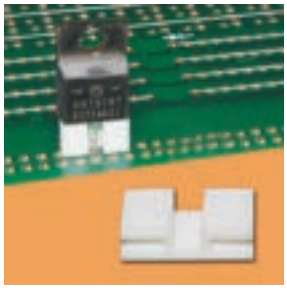

晶体管座 TRANSISTOR HOUSING 8-58-3

- MATERIAL: PBT,NYLON 66(UL)
- COLOR: NATURAL
- FOR TO-220 TRANSISTOR
  ＊ FOR TO-247 TRANSISTOR

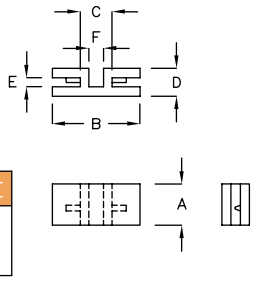

PART NO	MATERIAL	A	B	C	D	E	F	PACKAGE
TR-01H	PBT VO	4.5	9.5	3.4	3.0	1.0	1.6	2000
*TR-1MK	N66 V2	8.0	14.7	7.0	4.0	1.2	3.6	

晶体管座 TRANSISTOR HOUSING 8-58-4

- MATERIAL: PBT(UL)
- FLAME CLASS: 94V-0
- COLOR: NATURAL

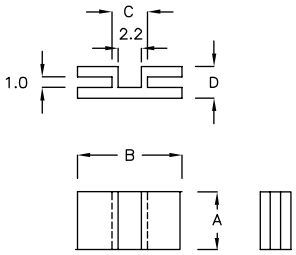

PART NO	A	B	C	D	PACKAGE
TR-01F	5.5	10.0	3.4	3.0	2000

晶体管座 TRANSISTOR HOUSING 8-58-5

- MATERIAL: PBT(UL)
- FLAME CLASS: 94V-0
- COLOR: NATURAL

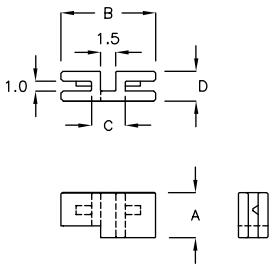

PART NO	A	B	C	D	PACKAGE
TR-1YQ	4.5	9.45	3.4	3.0	2000

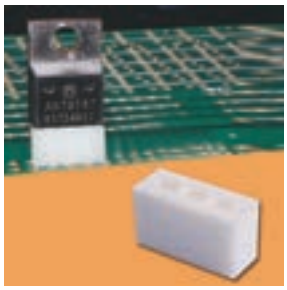

晶体管座 TRANSISTOR HOUSING 8-59-1

- MATERIAL: NYLON 66(UL)
- FLAME CLASS: 94V-0/94V-2
- COLOR: NATURAL
- FOR TO-220 TRANSISTOR
  ＊ FOR TO-3P TRANSISTOR

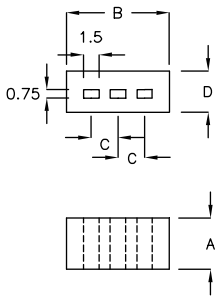

PART NO	A	B	C	D	PACKAGE
TR−02	5.0	10.0	2.6	4.0	2000
*TR−02A	5.0	15.0	5.75	4.0	
TR−02C	3.7	10.0	2.7	3.7	

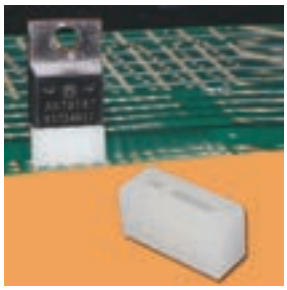

晶体管座 TRANSISTOR HOUSING 8-59-2

- MATERIAL: NYLON 66(UL)
- FLAME CLASS: 94V-0/94V-2
- COLOR: NATURAL
- FOR TO-220 TRANSISTOR

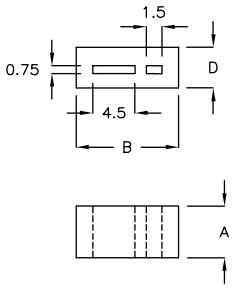

PART NO	A	B	D	PACKAGE
TR−02D	5.0	10.0	4.0	2000

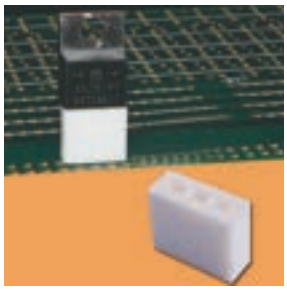

晶体管座 TRANSISTOR HOUSING 8-59-3

- MATERIAL: NYLON 66(UL)
- FLAME CLASS: 94V-0/94V-2
- COLOR: NATURAL
- FOR TO-220 TRANSISTOR

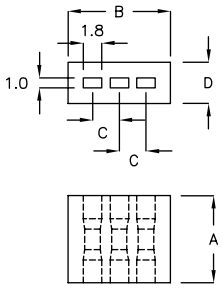

PART NO	A	B	C	D	PACKAGE
TR−02F	8.5	10.0	2.6	4.0	1000
TR−02H	9.5	10.0	2.6	4.0	

晶体管座 TRANSISTOR HOUSING 8-59-4

- MATERIAL: NYLON 66(UL)
- FLAME CLASS: 94V-0/94V-2
- COLOR: BLACK
- FOR TO-220 TRANSISTOR

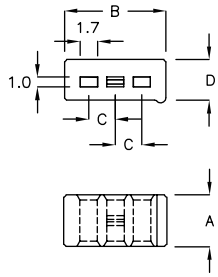

PART NO	A	B	C	D	PACKAGE
TR−2QM	5.0	10.0	2.6	4.0	2000

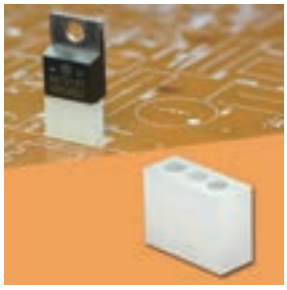

晶体管座 TRANSISTOR HOUSING 8-59-5

- MATERIAL: NYLON 66(UL)
- FLAME CLASS: 94V-0/94V-2
- COLOR: NATURAL
- FOR TO-220 TRANSISTOR

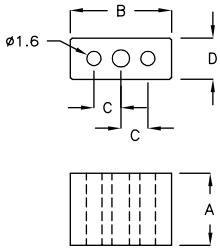

PART NO	A	B	C	D	PACKAGE
TRZ−07	7.0	9.8	2.6	4.0	1000

晶体管座 TRANSISTOR HOUSING 8-60-1

- MATERIAL: NYLON 66(UL)
- FLAME CLASS: 94V-0/94V-2
- COLOR: NATURAL
- FOR TO-220 TRANSISTOR

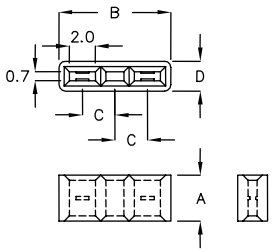

PART NO	A	B	C	D	PACKAGE
TR-2DC	3.5	8.6	2.5	2.3	2000

晶体管座 TRANSISTOR HOUSING 8-60-2

- MATERIAL: NYLON 66(UL)
- FLAME CLASS: 94V-0/94V-2
- COLOR: NATURAL,BLACK
- FOR TO-247 TRANSISTOR

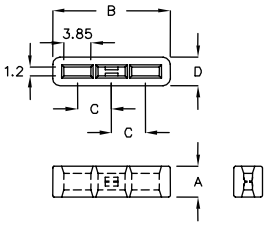

PART NO	A	B	C	D	PACKAGE
TR-2HK	4.3	15.0	4.8	2.8	2000
TR-2WS	4.3	16.5	4.8	4.0	
★ TR-11AM	11.0	16.5	4.77	4.77	1000

晶体管座 TRANSISTOR HOUSING 8-60-3

- MATERIAL: NYLON 66(UL)
- FLAME CLASS: 94V-0/94V-2
- COLOR: BLACK

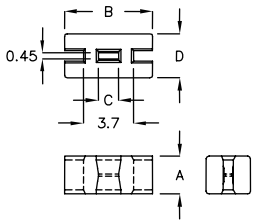

PART NO	A	B	C	D	PACKAGE
TRK-2A	2.8	6.5	1.5	3.0	2000

晶体管座 TRANSISTOR HOUSING 8-60-4

- MATERIAL: NYLON 66(UL)
- FLAME CLASS: 94V-0/94V-2
- COLOR: NATURAL

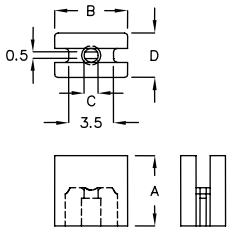

PART NO	A	B	C	D	PACKAGE
TRT-5CS	5.5	5.7	ø1.1	3.5	2000

晶体管座 TRANSISTOR HOUSING 8-60-5

- MATERIAL: NYLON 66(UL)
- FLAME CLASS: 94V-0/94V-2
- COLOR: NATURAL
- FOR TO-220FP TRANSISTOR

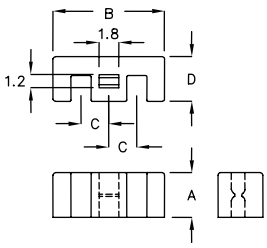

PART NO	A	B	C	D	PACKAGE
TRW-4YL	4.0	10.0	2.5	4.0	1000

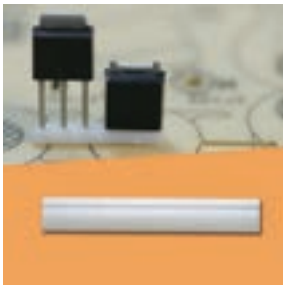

晶体管座 TRANSISTOR HOUSING 8-61-1

- MATERIAL: NYLON 66(UL)
- FLAME CLASS: 94V-0/94V-2
- COLOR: NATURAL
- FOR TO-251 TRANSISTOR

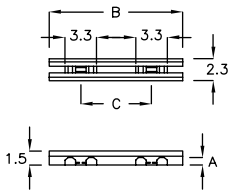

PART NO	A	B	C	PACKAGE
TRY-1A	0.8	14.0	7.4	1000

晶体管座 TRANSISTOR HOUSING 8-61-2

- MATERIAL: NYLON 66(UL)
- FLAME CLASS: 94V-0/94V-2
- COLOR: NATURAL

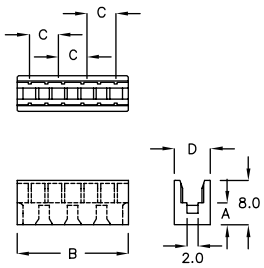

PART NO	A	B	C	D	PACKAGE
TR-20D	4.0	20.0	5.2	6.5	1000

晶体管座 TRANSISTOR HOUSING 8-61-3

- MATERIAL: PBT(UL)
- FLAME CLASS: 94V-0
- COLOR: BLACK

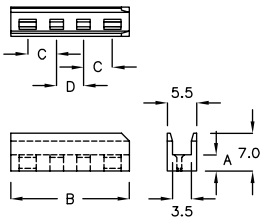

PART NO	A	B	C	D	PACKAGE
TR-22D	3.0	22.0	5.35	5.0	1000

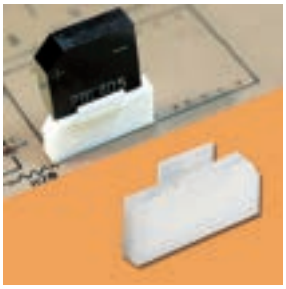

晶体管座 TRANSISTOR HOUSING 8-61-4

- MATERIAL: NYLON 66(UL)
- FLAME CLASS: 94V-0/94V-2
- COLOR: NATURAL

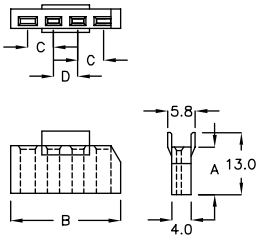

PART NO	A	B	C	D	PACKAGE
TRL-10	10.0	23.0	5.4	5.1	1000

晶体管座 TRANSISTOR HOUSING 8-61-5

- MATERIAL: NYLON 66(UL)
- FLAME CLASS: 94V-0/94V-2
- COLOR: NATURAL

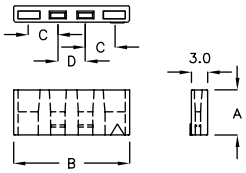

PART NO	A	B	C	D	PACKAGE
TRN-9H	8.5	21.3	5.44	5.08	1000

晶体管座 TRANSISTOR HOUSING 8-62-1

- MATERIAL: NYLON 66(UL)
- FLAME CLASS: 94V-0/94V-2
- COLOR: NATURAL
- FOR TO-247-4L-M TRANSISTOR

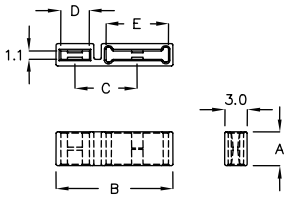

PART NO	A	B	C	D	E	PACKAGE
TRNC−4A	4.5	15.5	8.25	3.8	8.3	1000

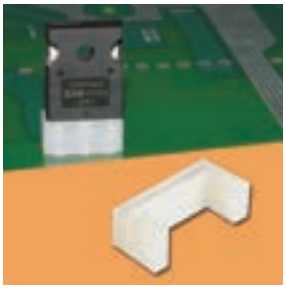

晶体管座 TRANSISTOR HOUSING 8-62-2

- MATERIAL: NYLON 66(UL)
- FLAME CLASS: 94V-0/94V-2
- COLOR: NATURAL
- FOR TO-3P TRANSISTOR

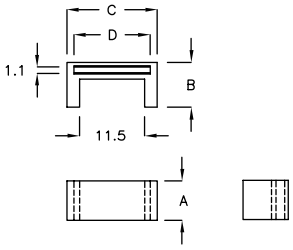

PART NO	A	B	C	D	PACKAGE
QLL−16	7.0	8.0	16.0	13.5	2000

晶体管盖 TRANSISTOR COVER 8-62-3

- MATERIAL: NYLON 66+GF30%
- FLAME CLASS: 94V-0
- COLOR: NATURAL

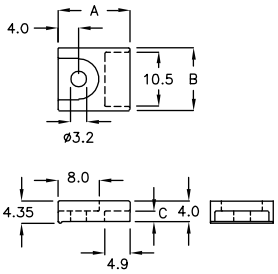

PART NO	A	B	C	PACKAGE
HUF−14	14.0	12.2	2.0	1000

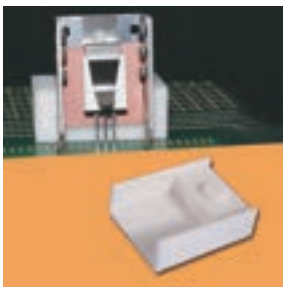

晶体管盖 TRANSISTOR COVER 8-62-4

- MATERIAL: PBT(UL)
- FLAME CLASS: 94V-0
- COLOR: NATURAL
- FOR TO-220 TRANSISTOR

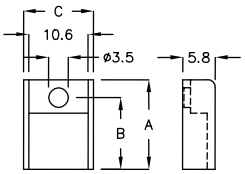

PART NO	A	B	C	PACKAGE
TR−03	16.0	12.8	12.5	500

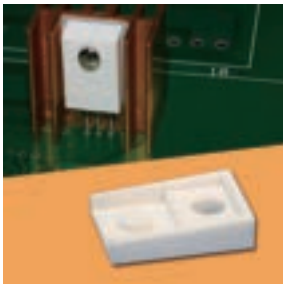

晶体管盖 TRANSISTOR COVER 8-62-5

- MATERIAL: PBT(UL)
- FLAME CLASS: 94V-0
- COLOR: NATURAL

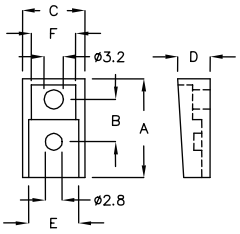

PART NO	A	B	C	D	E	F	PACKAGE
TR−03A	16.6	7.1	10.4	5.4	8.5	7.4	500
TR−03E	14.0	7.1	10.4	4.2	8.4	7.8	

晶体管盖 TRANSISTOR COVER 8-63-1

- MATERIAL: PBT(UL)
- FLAME CLASS: 94V-0
- COLOR: NATURAL

PART NO	A	B	C	PACKAGE
TR-03P	14.0	7.35	13.0	1000

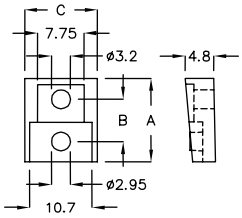

晶体管盖 TRANSISTOR COVER 8-63-2

- MATERIAL: PBT(UL)
- FLAME CLASS: 94V-0
- COLOR: NATURAL

PART NO	A	B	C	E	F	G	PACKAGE
TR-03C	14.0	7.1	10.4	8.4	7.8	ø2.8	500
TR-03D	14.0	7.1	12.0	10.2	7.7	ø3.4	
TR-03L	14.8	8.15	12.15	10.35	7.8	ø3.1	

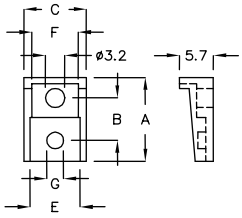

晶体管盖 TRANSISTOR COVER 8-63-3

- MATERIAL: PBT(UL)
- FLAME CLASS: 94V-0
- COLOR: NATURAL
- FOR TO-220 TRANSISTOR

PART NO	A	B	C	PACKAGE
TR-03N	14.2	8.15	12.15	500

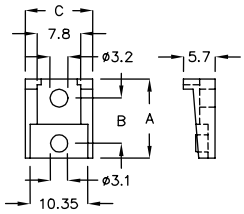

晶体管盖 TRANSISTOR COVER 8-63-4

- MATERIAL: PBT(UL)
- FLAME CLASS: 94V-0
- COLOR: NATURAL

PART NO	A	B	C	PACKAGE
TR-03F	16.0	12.8	10.3	500

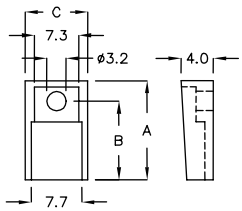

晶体管盖 TRANSISTOR COVER 8-63-5

- MATERIAL: PBT(UL)
- FLAME CLASS: 94V-0
- COLOR: NATURAL

PART NO	A	B	C	PACKAGE
TR-03K	21.55	14.1	10.8	500

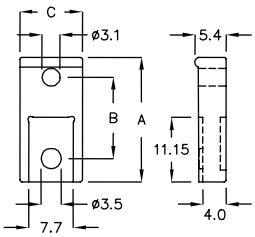

返回图片索引

晶体管盖 TRANSISTOR COVER 8-64-1

- MATERIAL: PBT(UL)
- FLAME CLASS: 94V-0
- COLOR: BLACK
- FOR TO-220 TRANSISTOR

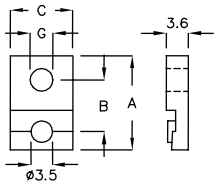

PART NO	A	B	C	G	PACKAGE
TR-04A	15.3	8.35	10.1	ø3.7	1000
TR-04H	13.0	6.0	10.1	ø3.2	

晶体管盖 TRANSISTOR COVER 8-64-2

- MATERIAL: PBT(UL)
- FLAME CLASS: 94V-0
- COLOR: NATURAL
- FOR TO-220 TRANSISTOR

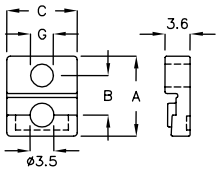

PART NO	A	B	C	G	PACKAGE
TR-4ND	11.45	5.65	10.1	ø3.2	1000

晶体管盖 TRANSISTOR COVER 8-64-3

- METAL MATERIAL: PHOSPHOR BRONZE
- PLASTIC MATERIAL: NYLON 66(UL)
- FLAME CLASS: 94V-0
- COLOR: BLACK
- FOR TO-220 TRANSISTOR

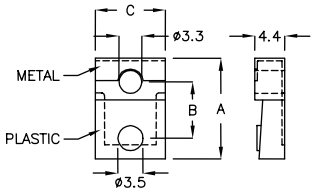

PART NO	A	B	C	PACKAGE
TR-04	14.6	8.2	10.2	1000

晶体管盖 TRANSISTOR COVER 8-64-4

- MATERIAL: PBT(UL)
- FLAME CLASS: 94V-0
- COLOR: NATURAL
- FOR TO-220 TRANSISTOR

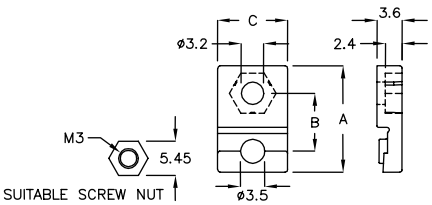

PART NO	A	B	C	PACKAGE
TR-4GS	15.3	8.35	10.1	1000
TR-4YK	14.3	7.4	10.1	

晶体管盖 TRANSISTOR COVER 8-64-5

- MATERIAL: PBT(UL)
- FLAME CLASS: 94V-0
- COLOR: NATURAL
- FOR TO-220 TRANSISTOR

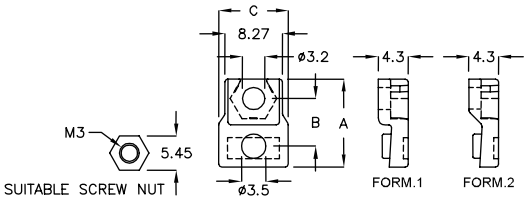

PART NO	A	B	C	FORM	PACKAGE
TR-4LF	12.65	6.85	10.0	1	1000
TR-4JW	12.65	6.85	10.0	2	

晶体管盖 TRANSISTOR COVER 8-65-1

- MATERIAL: PBT(UL)
- FLAME CLASS: 94V-0
- COLOR: NATURAL
- FOR TO-220 TRANSISTOR

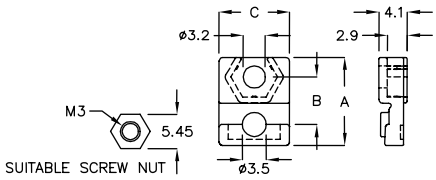

PART NO	A	B	C	PACKAGE
TR−4RL	12.65	6.85	10.1	1000

晶体管盖 TRANSISTOR COVER 8-65-2

- MATERIAL: PBT(UL)
- FLAME CLASS: 94V-0
- COLOR: NATURAL
- FOR TO-220 TRANSISTOR

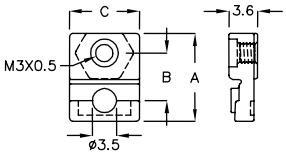

PART NO	A	B	C	PACKAGE
TRE−4BJ	12.65	6.85	10.1	200

晶体管盖 TRANSISTOR COVER 8-65-3

- MATERIAL: PBT(UL)
- FLAME CLASS: 94V-0
- COLOR: NATURAL
- FOR TO-220 TRANSISTOR

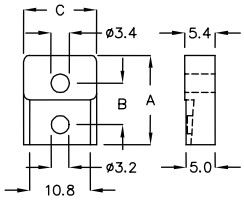

PART NO	A	B	C	PACKAGE
TR−05	16.2	7.4	13.0	200

晶体管盖 TRANSISTOR COVER 8-65-4

- MATERIAL: PBT(UL)
- FLAME CLASS: 94V-0
- COLOR: NATURAL
- FOR TO-220 TRANSISTOR

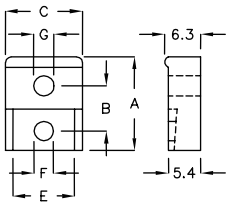

PART NO	A	B	C	E	F	G	PACKAGE
TR−06	16.2	7.65	13.1	10.3	ø3.1	ø3.4	200
TR−06A	16.1	7.75	13.2	10.6	ø3.3	ø3.5	
TR−08	17.6	9.15	13.0	10.5	ø3.1	ø3.4	
TR−08D	19.2	10.75	13.0	10.5	ø3.0	ø3.4	

晶体管盖 TRANSISTOR COVER 8-65-5

- MATERIAL: PBT(UL)
- FLAME CLASS: 94V-0
- COLOR: NATURAL
- FOR TO-220 TRANSISTOR

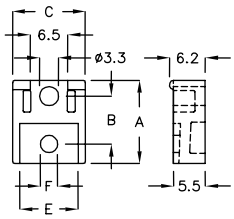

PART NO	A	B	C	E	F	PACKAGE
TR−06H	14.3	8.3	12.6	10.3	ø3.0	200
TR−06J	14.3	8.3	13.2	10.5	ø3.2	

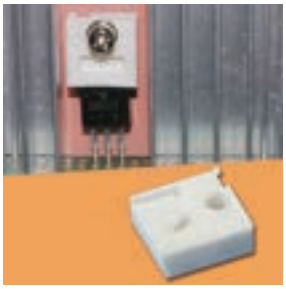

晶体管盖 TRANSISTOR COVER 8-66-1

- MATERIAL: PBT(UL)
- FLAME CLASS: 94V-0
- COLOR: NATURAL
- FOR TO-220 TRANSISTOR

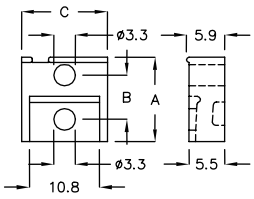

PART NO	A	B	C	PACKAGE
TR-06K	13.0	6.8	13.2	200

晶体管盖 TRANSISTOR COVER 8-66-2

- MATERIAL: PBT(UL)
- FLAME CLASS: 94V-0
- COLOR: NATURAL
- FOR TO-220 TRANSISTOR

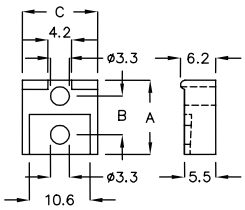

PART NO	A	B	C	PACKAGE
TR-06D	13.0	6.8	13.2	200

晶体管盖 TRANSISTOR COVER 8-66-3

- MATERIAL: PBT(UL)
- FLAME CLASS: 94V-0
- COLOR: NATURAL
- FOR TO-220 TRANSISTOR

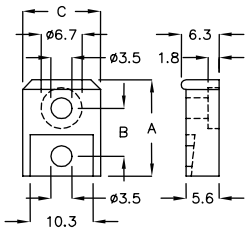

PART NO	A	B	C	PACKAGE
TR-08C	16.0	8.0	13.0	200

晶体管盖 TRANSISTOR COVER 8-66-4

- MATERIAL: PBT(UL)
- FLAME CLASS: 94V-0
- COLOR: NATURAL
- FOR TO-220 TRANSISTOR

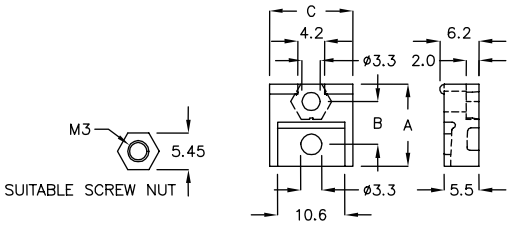

PART NO	A	B	C	PACKAGE
TR-6AF	13.0	6.8	13.2	200

晶体管盖 TRANSISTOR COVER 8-66-5

- MATERIAL: PBT(UL)
- FLAME CLASS: 94V-0
- COLOR: NATURAL
- FOR TO-220 TRANSISTOR

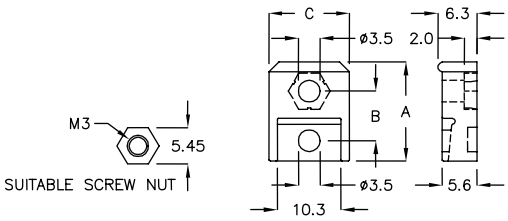

PART NO	A	B	C	PACKAGE
TR-8CF	16.0	8.0	13.0	200

晶体管盖 TRANSISTOR COVER 8-67-1

- MATERIAL: PBT(UL)
- FLAME CLASS: 94V-0
- COLOR: NATURAL
- FOR TO-220 TRANSISTOR
  ＊ FOR TO-3P TRANSISTOR

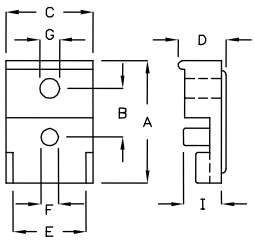

PART NO	A	B	C	D	E	F	G	H	I	PACKAGE
TR−09	22.9	9.3	12.9	9.4	10.4	ø2.9	ø3.5	8.5	7.8	200
＊TR−26	26.3	10.6	18.6	10.2	15.3	ø3.6	ø4.1	9.6	7.2	

晶体管盖 TRANSISTOR COVER 8-67-2

- MATERIAL: PBT(UL)
- FLAME CLASS: 94V-0
- COLOR: NATURAL
- FOR TO-3P TRANSISTOR

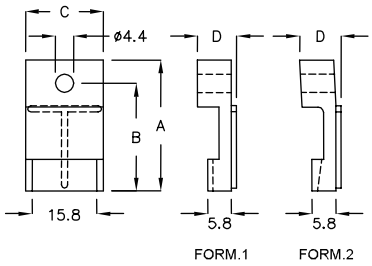

PART NO	A	B	C	D	FORM	PACKAGE
TR−10	32.0	26.3	19.1	9.75	1	200
TR−10KD	32.0	26.3	19.1	10.0	2	

晶体管盖 TRANSISTOR COVER 8-67-3

- MATERIAL: PBT(UL)
- FLAME CLASS: 94V-0
- COLOR: NATURAL
- FOR TO-3P TRANSISTOR

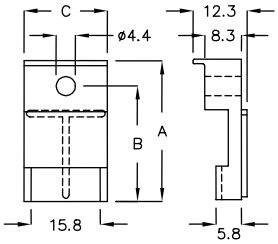

PART NO	A	B	C	PACKAGE
TR−11	32.0	26.3	19.0	200

晶体管盖 TRANSISTOR COVER 8-67-4

- MATERIAL: PBT(UL)
- FLAME CLASS: 94V-0
- COLOR: NATURAL
- FOR TO-247 TRANSISTOR

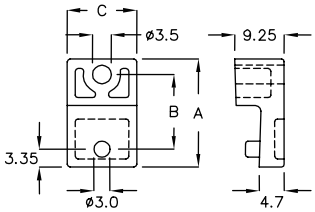

PART NO	A	B	C	PACKAGE
TR−20MK	20.25	14.0	13.0	500

晶体管盖 TRANSISTOR COVER 8-68-1

- MATERIAL: PBT(UL)
- FLAME CLASS: 94V-0
- COLOR: NATURAL
- FOR TO-220 TRANSISTOR

PART NO	A	B	PACKAGE
TR-21KP	21.5	9.3	200

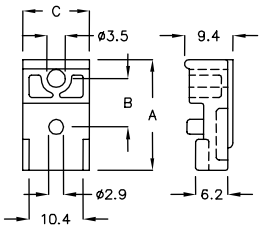

晶体管盖 TRANSISTOR COVER 8-68-2

- MATERIAL: PBT(UL)
- FLAME CLASS: 94V-0
- COLOR: NATURAL
- FOR TO-3P TRANSISTOR

PART NO	A	B	C	D	E	PACKAGE
TR-25	27.0	12.3	18.5	8.4	15.5	200
TR-30	32.3	9.7	21.3	9.5	18.3	
TR-30A	33.2	12.3	21.3	9.5	18.3	

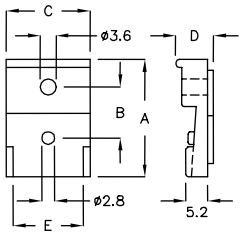

晶体管盖 TRANSISTOR COVER 8-68-3

- MATERIAL: PBT(UL)
- FLAME CLASS: 94V-0
- COLOR: NATURAL

PART NO	A	B	C	PACKAGE
TR-31	25.0	14.65	25.1	200

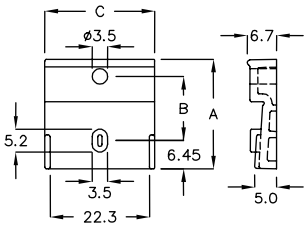

晶体管盖 TRANSISTOR COVER 8-68-4

- MATERIAL: PBT(UL)
- FLAME CLASS: 94V-0
- COLOR: NATURAL

PART NO	A	B	C	PACKAGE
TR-31A	20.0	13.55	25.4	200

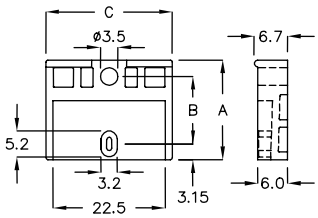

晶体管盖 TRANSISTOR COVER 8-68-5

- MATERIAL: PBT(UL)
- FLAME CLASS: 94V-0
- COLOR: NATURAL

PART NO	A	B	C	PACKAGE
TR-33MQ	22.0	14.1	33.3	200

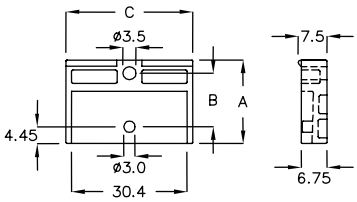

晶体管盖 TRANSISTOR COVER 8-69-1

- MATERIAL: PBT(UL)
- FLAME CLASS: 94V-0
- COLOR: NATURAL

PART NO	A	B	C	G	PACKAGE
TR-35	37.7	11.4	18.8	ø3.6	200
TR-35A	37.7	11.4	18.8	ø4.1	

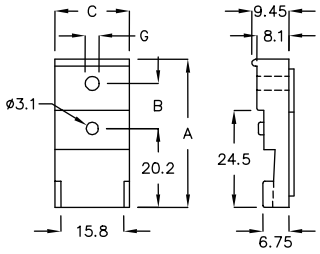

晶体管盖 TRANSISTOR COVER 8-69-2

- MATERIAL: PBT(UL)
- FLAME CLASS: 94V-0
- COLOR: NATURAL

PART NO	A	B	C	PACKAGE
TR-35C	37.7	11.4	18.8	200

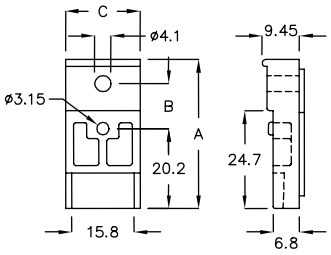

晶体管盖 TRANSISTOR COVER 8-69-3

- MATERIAL: PBT(UL)
- FLAME CLASS: 94V-0
- COLOR: NATURAL

PART NO	A	B	C	PACKAGE
TRX-28K	28.5	12.4	19.1	100

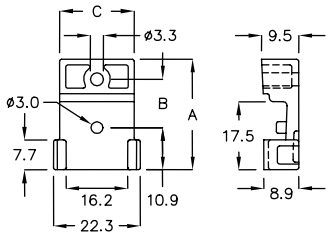

晶体管盖 TRANSISTOR COVER 8-69-4

- MATERIAL: PBT(UL)
- FLAME CLASS: 94V-0
- COLOR: NATURAL

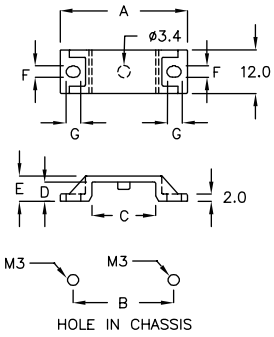

PART NO	A	B	C	D	E	F	G	PACKAGE
TRM-01	32.0	25.5	16.0	4.7	6.2	3.2	3.2	500
TRM-2A	35.0	27.65	17.5	5.3	7.0	3.2	4.0	

晶体管盖 TRANSISTOR HOUSING 8-69-5

- MATERIAL: PBT(UL)
- FLAME CLASS: 94V-0
- COLOR: NATURAL
- FOR TO-220 TRANSISTOR

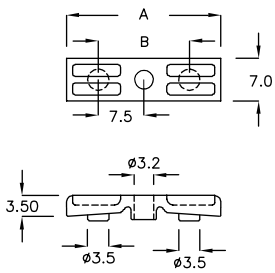

PART NO	A	B	PACKAGE
TRJ-25F	25.4	15.0	500

晶体管盖 TRANSISTOR HOUSING 8-70-1

- MATERIAL: PBT(UL)
- FLAME CLASS: 94V-0
- COLOR: NATURAL
- FOR TO-247 TRANSISTOR

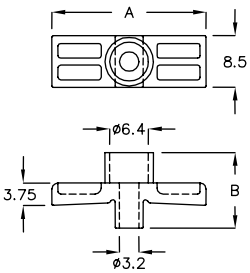

PART NO	A	B	PACKAGE
TRJP-25BC	25.4	12.5	500
TRJP-36AK	36.3	15.15	

晶体管盖 TRANSISTOR HOUSING 8-70-2

- MATERIAL: PBT(UL)
- FLAME CLASS: 94V-0
- COLOR: NATURAL
- FOR TO-247-3 TRANSISTOR

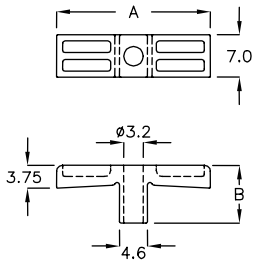

PART NO	A	B	PACKAGE
TRJQ-25A	25.4	9.5	500

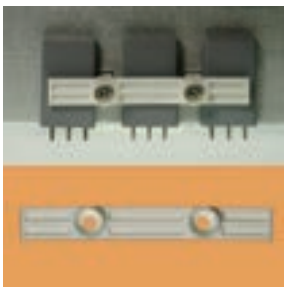

晶体管盖 TRANSISTOR HOUSING 8-70-3

- MATERIAL: PBT(UL)
- FLAME CLASS: 94V-0
- COLOR: NATURAL
- FOR TO-247 TRANSISTOR

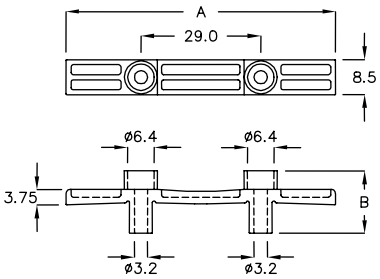

PART NO	A	B	PACKAGE
TRJW-65C	65.3	15.15	200

晶体管盖 TRANSISTOR HOUSING 8-70-4

- MATERIAL: NYLON 66(UL)
- FLAME CLASS: 94V-0/94V-2
- COLOR: NATURAL

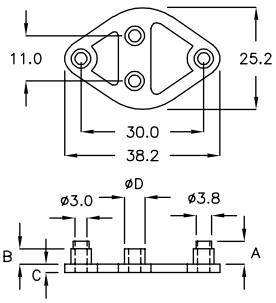

PART NO	A	B	C	D	PACKAGE
TR-20	5.6	3.8	2.1	5.0	200
TR-20A	8.2	5.9	2.0	6.0	

晶体管座 TRANSISTOR HOUSING 8-70-5

- MATERIAL: NYLON 66(UL)
- FLAME CLASS:94V-0/94V-2
- COLOR: NATURAL

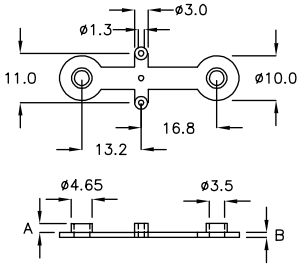

PART NO	A	B	PACKAGE
TR-20B	2.0	1.1	500

返回图片索引

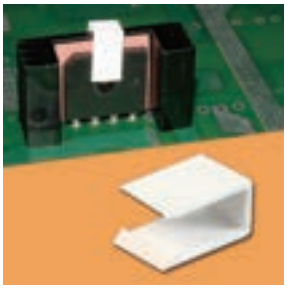

晶体管固定扣 TRANSISTOR CLAMP 8-71-1

- MATERIAL: PBT(UL)
- FLAME CLASS: 94V-0
- COLOR: NATURAL

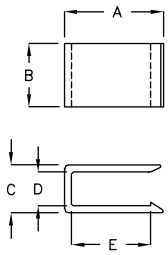

PART NO	A	B	C	D	E	PACKAGE
TRQ-4H	13.75	6.0	6.3	4.5	11.5	1000
TRQ-5CN	12.6	8.0	7.5	5.7	10.0	
TRQ-5ZL	17.25	8.0	6.8	5.0	14.7	
TRQ-10	12.5	8.0	7.0	5.2	10.0	
TRQ-10A	12.5	8.0	8.0	6.2	10.0	
TRQ-10F	12.5	8.0	7.3	5.5	10.0	
TRQ-10W	12.5	8.0	6.1	4.3	10.0	

晶体管固定扣 TRANSISTOR CLAMP 8-71-2

- MATERIAL: PBT(UL)
- FLAME CLASS: 94V-0
- COLOR: NATURAL

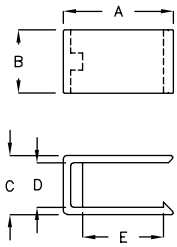

PART NO	A	B	C	D	E	PACKAGE
TRQ-5K	13.6	7.8	7.3	5.5	10.0	1000
TRQ-5P	12.6	7.8	7.3	5.5	9.0	
TRQ-7A	13.6	8.0	8.8	7.0	10.0	

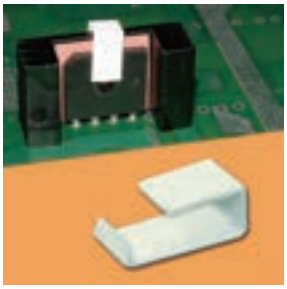

晶体管固定扣 TRANSISTOR CLAMP 8-71-3

- MATERIAL: PBT(UL)
- FLAME CLASS: 94V-0
- COLOR: NATURAL

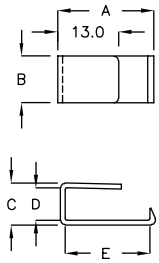

PART NO	A	B	C	D	E	PACKAGE
TRQ-7DM	20.4	10.0	9.0	7.0	18.1	1000

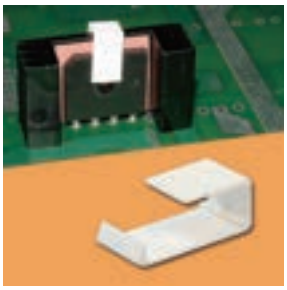

晶体管固定扣 TRANSISTOR CLAMP 8-71-4

- MATERIAL: PBT(UL)
- FLAME CLASS: 94V-0
- COLOR: NATURAL

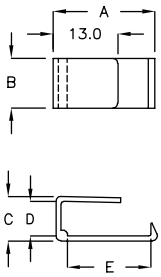

PART NO	A	B	C	D	E	PACKAGE
TRQ-7F	21.9	10.0	9.0	7.0	18.2	1000

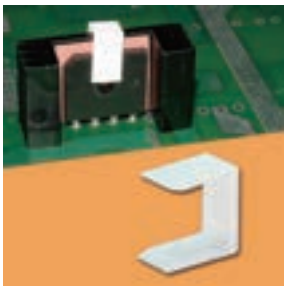

晶体管固定扣 TRANSISTOR CLAMP 8-71-5

- MATERIAL: PBT(UL)
- FLAME CLASS: 94V-0
- COLOR: NATURAL

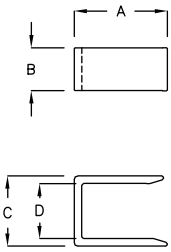

PART NO	A	B	C	D	PACKAGE
TRQ-5JX	6.8	4.5	6.6	5.0	1000
TRQ-6MQ	6.8	4.5	7.9	6.3	
TRQ-7HL	6.8	4.5	8.6	7.0	
TRQ-7SK	8.2	4.5	8.6	7.0	

热收缩套管 HEAT SHRINKING TUBE 8-72-1

- SIZE: Φ1.2~Φ50.8
- COLOR: BLACK
- LENGTH IS ACCORDING TO CUSTOMER'S DEMAND

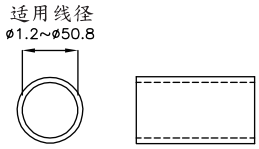

硅胶片 SILICONE RUBBER 8-72-2

- MATERIAL: SILICONE (UL)
- COLOR: GRAY
- FLAME CLASS: 94V-0
- THICKNESS: 0.3~0.8mm
- LENGTH IS ACCORDING TO CUSTOMER'S DEMAND

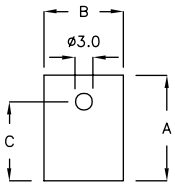

PART NO	A	B	C	PACKAGE
TO-3P3A	25.0	20.0	16.5	1000
TO-2203A	18.0	13.0	13.5	

硅胶帽套 SILICONE RUBBER TUBE 8-72-3

- MATERIAL: SILICONE(UL)
- FLAME CLASS: 94V-0
- COLOR: GRAY

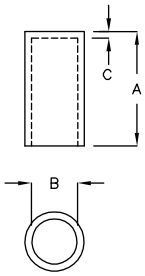

PART NO	A	B	C	PACKAGE
CST-1315	15.0	ø13.2	0.45	1000
CST-1925	25.0	ø18.7	0.45	500

硅胶帽套 SILICONE RUBBER TUBE 8-72-4

- MATERIAL: SILICONE(UL)
- COLOR: GRAY
- FLAME CLASS: 94V-0
- ACCORDING TO CUSTOMER'S DEMAND

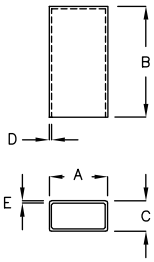

PART NO	A	B	C	D	E	PACKAGE
TO-220ST	11.4	21.5	5.8	0.45	0.45	1000
TO-220ST-B	11.4	16.0	5.8	0.45	0.45	
TO-3PST	17.5	28.5	5.9	0.45	0.45	
TO-4PST	23.5	22.0	5.0	0.4	0.4	

陶瓷片 CERAMICS 8-72-5

- MATERIAL: CERAMICS
- COLOR: NATURAL

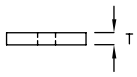

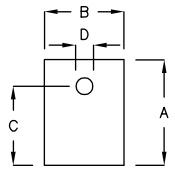

PART NO	A	B	C	D	T	PACKAGE
TQA-01	19.2	13.8	14.6	ø3.7	2.0	1000
TQA-02	30.0	19.0	22.0	ø4.0	2.5	500
TQA-05	21.7	14.9	15.6	ø3.6	1.5	1000
TQA-07	14.2	10.3	9.4	ø3.8	3.0	

脚垫,烫金脚垫,垫座
PLASTIC RUBBER FOOT

返回图片索引

脚垫 PLASTIC FOOT 9-2-1

- MALE MATERIA L: PP
- FEMALE MATERIAL: EVA
- COLOR: BLACK
- INCLUDE PIN

* 附 PIN

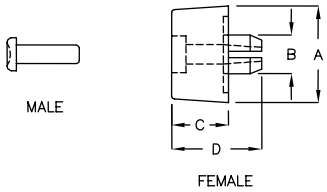

PART NO	A	B HOLE IN CHASSIS	C	D	CHASSIS THICKNESS	PACKAGE
GL−13	ø13.1	ø5.0	4.6	9.0	1.0~2.0	500
GL−16	ø15.8	ø5.0	4.5	8.8	1.0~2.0	
GL−18	ø19.9	ø8.0	18.0	23.5	0.8~1.0	
GL−18S	ø20.0	ø8.0	18.0	21.9	0.8~1.0	
GL−19S	ø19.4	ø8.0	4.0	7.0	1.0~2.0	
GL−19	ø19.5	ø8.0	5.0	10.4	1.0~2.5	
GL−19M	ø19.8	ø8.0	7.0	11.0	1.0~2.0	
GL−19H	ø20.3	ø8.0	10.2	15.7	1.0~2.5	
GL−20H	ø20.0	ø8.0	20.3	25.9	1.0~3.5	200
GL−24	ø24.0	ø8.0	5.0	10.4	1.0~2.5	500
GL−24L	ø24.0	ø8.0	5.0	10.8	1.0~2.7	
GL−24H	ø24.0	ø8.0	10.5	15.8	1.0~2.5	
GL−27C	ø27.0	ø10.0	7.0	12.0	0.8~1.2	200
GL−29	ø28.6	ø10.0	8.0	13.8	1.0~3.5	500
GL−30	ø29.5	ø10.0	15.0	23.3	0.8~2.5	200
GL−30PR	ø30.0	ø8.0	3.5	7.5	0.8~1.0	500
GL−32	ø31.5	ø10.0	7.8	13.6	1.0~3.5	
GL−32S	ø32.0	ø10.0	7.8	11.3	0.8~1.2	200

脚垫 PLASTIC FOOT 9-2-2

- MALE MATERIAL: PP
- FEMALE MATERIAL: EVA
- COLOR: BLACK
- INCLUDE PIN

* 附 PIN

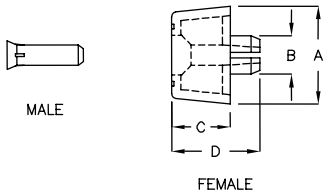

PART NO	A	B HOLE IN CHASSIS	C	D	CHASSIS THICKNESS	PACKAGE
GL−20K	ø26.7	ø7.8	16.0	21.0	0.8~1.4	200
GL−20L	ø20.0	ø8.0	12.0	18.0	0.8~1.8	
GL−20P	ø19.5	ø8.0	8.0	12.5	0.8~1.2	500
GL−27	ø27.0	ø8.0	13.0	18.0	0.8~1.8	200
GL−27F	ø26.7	ø7.8	5.0	10.0	0.8~1.2	
GL−27K	ø26.7	ø7.8	10.0	15.0	0.8~1.2	
GL−32D	ø33.0	ø8.4	16.0	21.7	0.8~1.6	

脚垫 PLASTIC FOOT 9-3-1

- MALE MATERIAL: NYLON 66(UL)
- FEMALE MATERIAL: TPR(UL)
- FLAME CLASS: 94V-0/94V-2
- COLOR: BLACK,GRAY
- INCLUDE PIN
  * 附 PIN

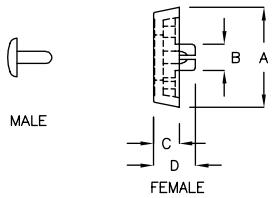

PART NO	CHASSIS THICKNESS	A	B HOLE IN CHASSIS	C	D	PACKAGE
GL-20M	0.8	ø20.0	ø5.3	5.2	8.4	500

脚垫 PLASTIC FOOT 9-3-2

- MALE MATERIAL: PP
- FEMALE MATERIAL: EVA
- COLOR: BLACK,GRAY
- INCLUDE PIN
  * 附 PIN

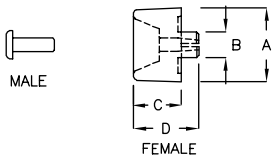

PART NO	CHASSIS THICKNESS	A	B HOLE IN CHASSIS	C	D	PACKAGE
GL-23D	0.8~1.6	ø23.0	ø8.2	15.0	20.5	200
GL-23F	0.8~1.6	ø23.0	ø8.0	23.0	28.5	

脚垫 PLASTIC FOOT 9-3-3

- MATERIAL: TPR(UL)
- FLAME CLASS: 94V-0
- COLOR: BLACK
- MUST BE FASTENED BY M3 SCREW

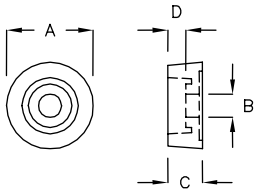

PART NO	A	B	C	D	PACKAGE
GL-03	ø15.0	ø4.2	6.0	3.2	500

脚垫 PLASTIC FOOT 9-3-4

- MATERIAL: TPE
- COLOR: BLACK
- MUST BE FASTENED BY M3 SCREW
- GL-7 CAN BE USED WITH SR-5 TO SNAP IN

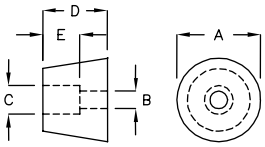

PART NO	A	B	C	D	E	PACKAGE
GL-2	ø13.8	ø3.2	ø5.9	10.0	6.0	1000
GL-2C	ø12.0	ø3.5	ø6.35	8.0	3.3	
GL-4	ø20.0	ø3.4	ø8.7	10.4	4.5	500
GL-4D	ø20.0	ø4.5	ø8.8	10.4	4.6	
GL-5	ø28.0	ø3.8	ø8.2	19.8	13.8	100
GL-6K	ø19.0	ø3.8	ø9.0	6.3	3.2	500
GL-6S	ø18.2	ø4.2	ø9.0	7.8	3.8	1000
GL-7	ø14.7	ø5.0	ø9.0	6.0	2.2	
GL-7S	ø14.7	ø5.0	ø9.0	5.0	2.2	

脚垫 PLASTIC FOOT 9-4-1

- MATERIAL: EVA
- COLOR: BLACK
- MUST BE FASTENED BY M3 SCREW

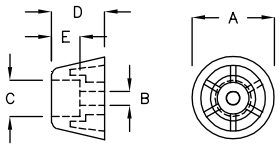

PART NO	A	B	C	D	E	PACKAGE
GL-4A	ø20.0	ø4.2	ø9.0	10.4	6.5	500
GL-4L	ø19.7	ø3.4	ø8.7	12.6	6.8	
GL-6	ø18.6	ø3.95	ø8.8	6.4	3.3	
GL-9	ø25.0	ø3.3	ø9.0	6.4	3.4	
GL-20	ø20.0	ø4.2	ø9.2	20.0	14.0	200

烫金脚垫 HOT STAMPING FOOT 9-4-2

- MATERIAL: ABS+SPONGE
- COLOR: BLACK(ABS), BLACK+GOLD,BLACK+SILVER
- MUST BE FASTENED BY M3 SCREW

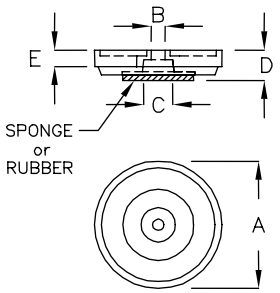

PART NO	A	B	C	D	E HOT STAMPING	COLOR	PACKAGE
GLA-30C	ø30.2	ø3.6	ø8.1	9.3	6.4	STAMPING GOLD	100
GLA-30F	ø30.0	ø4.3	ø11.5	6.0	4.0		
GLA-40F	ø40.0	ø4.3	ø11.5	8.0	4.5	STAMPING SILIVER	
GLA-45F	ø44.8	ø4.0	ø10.3	10.9	5.8		
GLA-50F	ø50.0	ø4.3	ø11.5	13.5	8.0	ABS BLACK	50

烫金脚垫 HOT STAMPING FOOT 9-4-3

- MATERIAL: ABS+SPONGE
- COLOR: BLACK(ABS) BLACK+GOLD,BLACK+SILVER
- MUST BE FASTENED BY M3 SCREW

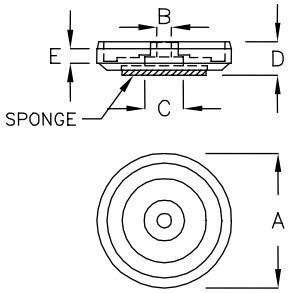

PART NO	A	B	C	D	E HOT STAMPING	PACKAGE
GLA-40H	ø40.0	ø4.3	ø11.5	10.0	4.5	100

烫金脚垫 HOT STAMPING FOOT 9-4-4

- MATERIAL: ABS+SPONGE
- COLOR: BLACK(ABS) BLACK+GOLD,BLACK+SILVER
- MUST BE FASTENED BY M3 SCREW

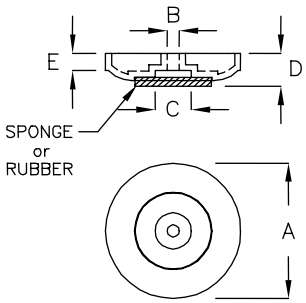

PART NO	A	B	C	D	E HOT STAMPING	COLOR	PACKAGE
GLA-45C	ø44.5	ø4.0	ø12.0	10.9	5.7	STAMPING GOLD STAMPING SILIVER ABS BLACK	50

脚垫 RUBBER FOOT 9-5-1

- PLASTIC MATERIAL: NYLON 66(UL)
- FLAME CLASS: 94V-0
- SOFT MATERIAL: SILICONE
- COLOR: BLACK

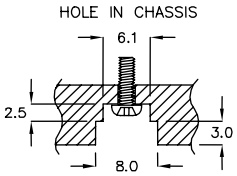

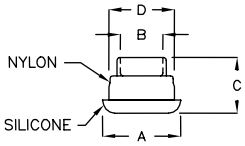

PART NO	A	B	C	D	PACKAGE
WHT-6C	ø9.6	ø5.3	6.8	ø8.0	2000

脚垫 RUBBER FOOT 9-5-2

- PLASTIC MATERIAL: NYLON 66, NYLON 46(UL)
- FLAME CLASS: 94V-0
- SOFT MATERIAL: SILICONE
- COLOR: BLACK, GRAY

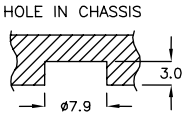

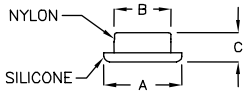

PART NO	PLASTIC MATERIAL	A	B	C	PACKAGE
WHT-6F	N66/BLACK	ø11.0	ø8.0	4.15	2000
	N66/GRAY	ø9.6	ø7.9	4.55	
	N46/BLACK	ø9.6	ø8.0	4.55	

脚垫 RUBBER FOOT 9-5-3

- MATERIAL: TPE
- COLOR: BLACK

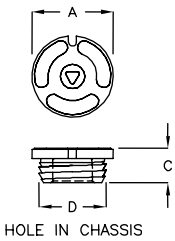

PART NO	A	C	D HOLE IN CHASSIS	PACKAGE
GLE-01	ø20.0	8.5	ø15.7	500
GLE-02	ø22.8	9.1	ø20.0	
GLE-03	ø20.0	7.3	ø15.7	

垫座 SILICONE RUBBER FOOT 9-5-4

- MATERIAL: SILICONE
- COLOR: BLACK

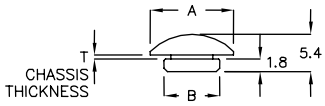

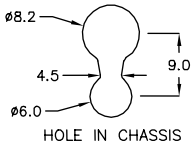

PART NO	A	B	T CHASSIS THICKNESS	PACKAGE
GMC-3CD	ø12.0	ø8.0	0.6	2000

垫座 SILICONE RUBBER FOOT 9-5-5

- MATERIAL: SILICONE
- COLOR: BLACK

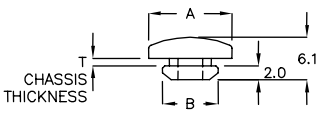

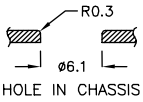

PART NO	A	B	T CHASSIS THICKNESS	PACKAGE
GMC-3RF	ø12.0	ø8.0	1.2	2000

返回图片索引

垫座 RUBBER FOOT 9-6-1

- MATERIAL: PU
- COLOR: BLACK

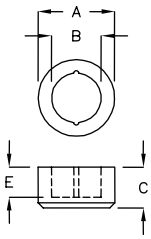

PART NO	A	B	C	E	PACKAGE
LGA-01	ø15.0	ø9.7	8.0	5.9	500
LGA-02	ø15.0	ø9.7	8.5	6.2	

垫座 SILICONE RUBBER FOOT 9-6-2

- MATERIAL: SILICONE
- COLOR: BLACK

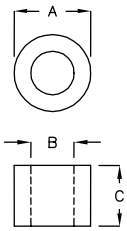

PART NO	A	B	C	PACKAGE
C120609A	ø12.0	ø6.8	9.5	2000

垫座 SILICONE RUBBER FOOT 9-6-3

- MATERIAL: SILICONE
- COLOR: BLACK
- ADHESIVE TAPE: 3M or EQUIVALENT

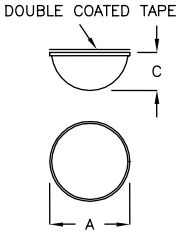

PART NO	A	C	PACKAGE
S0603	ø6.3	3.0	3200
S0702	ø7.0	2.0	3000
S0803D	ø8.0	3.5	
S0904	ø8.8	3.6	1000
S0904MF	ø8.8	4.3	
S1105	ø10.7	5.2	
S1106	ø11.0	6.0	
S1608	ø15.7	8.0	

垫座 SILICONE RUBBER FOOT 9-6-4

- MATERIAL: SILICONE
- COLOR: BLACK,GRAY
- ADHESIVE TAPE: 3M or EQUIVALENT

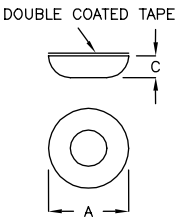

PART NO	A	C	PACKAGE
S1303K	ø13.0	3.35	500
S1303NH	ø13.0	3.55	

返回图片索引

垫座 SILICONE RUBBER FOOT 9-7-1

- MATERIAL: SILICONE
- COLOR: BLACK
- ADHESIVE TAPE: 3M or EQUIVALENT

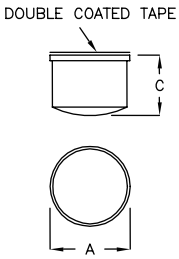

PART NO	A	C	PACKAGE
U0802F	ø8.0	2.6	2000
U0802KM	ø8.0	2.4	1000
U1815	ø18.0	14.5	500

垫座 SILICONE RUBBER FOOT 9-7-2

- MATERIAL: SILICONE
- COLOR: BLACK
- ADHESIVE TAPE: 3M or EQUIVALENT

*ACCEPTABLE FOR CUSTOMIZED REQUEST

◎我司可接受特别尺寸订购

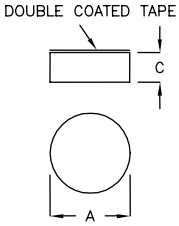

PART NO	A	C	PACKAGE
R0301A	ø3.8	0.5	2000
R0401	ø4.0	1.0	
R0402	ø4.0	1.8	
R0501	ø4.8	1.0	
R0501A	ø5.0	1.5	
R0502	ø5.0	1.8	
R0502J	ø5.0	2.4	
R0503A	ø5.0	3.5	
R0601	ø5.7	1.0	
R0602	ø6.0	1.5	
R0602A	ø6.0	2.0	
R0602C	ø6.0	2.5	
R0603	ø6.0	3.0	
R0603S	ø6.4	2.6	
R0702F	ø6.5	2.0	
R0703A	ø6.5	3.2	
R0701J	ø7.0	1.0	
R0702C	ø7.0	2.0	
R0702A	ø7.0	2.2	
R0703	ø7.0	3.0	
R0701K	ø7.5	0.65	
R0801C	ø8.0	0.7	
R0801	ø8.0	1.0	
R0802H	ø8.0	1.5	
R0802	ø8.0	1.8	

PART NO	A	C	PACKAGE
R0802C	ø8.0	2.0	2000
R0802P	ø8.0	2.2	
R0803S	ø8.0	2.6	
R0803C	ø8.0	3.0	
R0803	ø8.0	3.2	
R0803F	ø8.0	3.4	
R0803D	ø8.0	3.5	
R0802L	ø8.2	2.0	
R0802K	ø8.5	2.0	
R0902C	ø9.0	2.0	
R0901	ø9.5	1.5	
R0902A	ø9.5	2.0	
R1001K	ø10.0	0.65	
R1001	ø10.0	1.0	
R1002	ø10.0	2.0	
R1002C	ø10.0	2.5	
R1003C	ø10.0	3.0	
R1003A	ø10.0	3.3	
R1202A	ø12.0	2.0	
R1202D	ø12.0	2.5	
R1202	ø12.7	2.0	
R1202C	ø12.7	2.5	
R1501	ø15.0	1.0	
R1502C	ø15.0	2.0	500
R2103	ø21.0	3.0	
R2802M	ø28.0	2.5	

返回图片索引

垫座 SILICONE RUBBER FOOT 9-8-1

- MATERIAL: SILICONE
- COLOR: BLACK
- ADHESIVE TAPE: 3M or EQUIVALENT

*ACCEPTABLE FOR CUSTOMIZED REQUEST

◎我司可接受特别尺寸订购

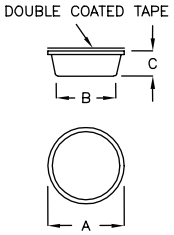

PART NO	A	B	C	PACKAGE
R0805	ø8.2	ø6.6	5.0	2000
R0806A	ø8.0	ø7.3	6.0	
R0808	ø8.0	ø7.04	8.0	
R0903	ø9.5	ø8.5	3.7	
R0906C	ø9.5	ø7.75	6.1	
R1003	ø10.9	ø10.0	3.0	
R1008	ø10.0	ø8.8	8.0	1000
R1105	ø10.9	ø9.7	5.0	2000
R1204A	ø11.7	ø7.0	4.0	
R1205	ø12.0	ø11.0	5.0	

PART NO	A	B	C	PACKAGE
R1302A	ø12.7	ø11.7	2.0	2000
R1303	ø12.6	ø10.0	3.5	
R1304	ø12.7	ø11.5	4.0	
R1305	ø12.7	ø10.6	4.7	
R1306	ø12.7	ø10.3	6.2	1000
R1307A	ø12.7	ø10.1	7.35	
R1511	ø15.0	ø13.5	11.0	500
R1904	ø19.0	ø15.5	4.2	
R1907	ø19.0	ø17.0	7.0	

垫座 SILICONE RUBBER FOOT 9-8-2

- MATERIAL: SILICONE
- COLOR: BLACK
- ADHESIVE TAPE: 3M or EQUIVALENT

*ACCEPTABLE FOR CUSTOMIZED REQUEST

◎ 我司可接受特别尺寸订购

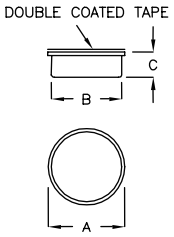

PART NO	A	B	C	PACKAGE
R0401D	ø4.5	ø4.0	1.7	2000
R0402ADK	ø4.5	ø4.0	2.5	
R0404	ø4.0	ø3.7	4.5	
R0502KM	ø5.0	ø4.7	2.0	
R0502LK	ø5.5	ø5.2	2.2	
R0504	ø5.8	ø5.4	4.0	
R0603H	ø6.0	ø5.5	3.0	
R0603C	ø6.8	ø6.6	3.1	
R0605	ø6.0	ø5.7	5.2	
R0703C	ø7.0	ø6.8	3.2	
R0704K	ø7.0	ø6.5	4.0	
R0705A	ø7.0	ø6.7	4.6	
R0801LM	ø8.0	ø7.4	1.8	
R0802PQ	ø8.0	ø7.5	2.0	
R0803HD	ø8.0	ø7.5	2.6	

PART NO	A	B	C	PACKAGE
R0803GQ	ø8.0	ø7.5	3.0	2000
R0803MK	ø8.0	ø7.7	3.5	
R0804	ø8.0	ø7.8	3.7	
R0804A	ø8.0	ø7.8	4.5	1000
R0804F	ø8.5	ø8.0	4.0	2000
R0903S	ø9.4	ø9.0	3.2	
R1004	ø9.7	ø9.4	4.2	
R0910A	ø9.0	ø8.8	10.2	500
R1004C	ø10.5	ø10.5	4.5	
R1005D	ø10.0	ø9.7	5.5	1000
R1009A	ø10.0	ø9.8	9.4	500
R1011	ø10.0	ø9.0	11.5	
R1505	ø15.4	ø14.9	5.1	
R1507	ø15.0	ø14.4	7.0	
R2210	ø22.0	ø21.7	10.4	

垫座 SILICONE RUBBER FOOT 9-9-1

- MATERIAL: SILICONE
- COLOR: BLACK
- ADHESIVE TAPE: 3M or EQUIVALENT

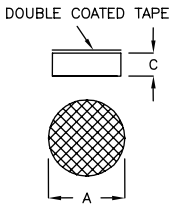

PART NO	A	C	PACKAGE
RX0902	ø9.0	2.0	2000
RX1003	ø10.0	3.0	
RX1203	ø12.0	3.0	
RX1202	ø12.5	2.0	1000
RX1502	ø15.0	2.0	
RX2503	ø25.0	3.0	

垫座 SILICONE RUBBER FOOT 9-9-2

- MATERIAL: SILICONE
- COLOR: BLACK
- ADHESIVE TAPE: 3M or EQUIVALENT

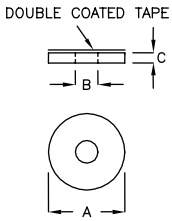

PART NO	A	B	C	PACKAGE
C060301	ø6.0	ø3.0	1.0	2000
C060302	ø6.0	ø3.0	2.0	
C070301	ø7.0	ø3.0	1.0	
C080401C	ø8.0	ø4.7	0.9	
C090202A	ø9.0	ø2.5	2.5	
C100501	ø10.0	ø5.0	1.0	
C120206	ø12.0	ø6.0	2.5	
C190603	ø18.9	ø5.6	2.54	1000
C311303	ø31.5	ø13.0	3.0	50

垫座 SILICONE RUBBER FOOT 9-9-3

- MATERIAL: SILICONE
- COLOR: BLACK, WHITE
- ADHESIVE TAPE: 3M or EQUIVALENT

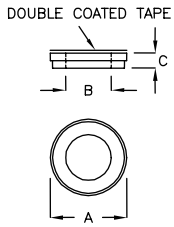

PART NO	A	B	C	PACKAGE
WRX-3C	ø5.0	ø3.0	1.0	2000
WRX-6MT	ø12.0	ø6.0	2.5	1000

垫座 SILICONE RUBBER FOOT 9-9-4

- MATERIAL: SILICONE
- COLOR: BLACK
- ADHESIVE TAPE: 3M or EQUIVALENT

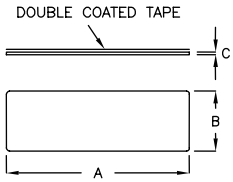

PART NO	A	B	C	PACKAGE
L1193901M	119.0	39.0	0.5	500

垫座 SILICONE RUBBER FOOT

- MATERIAL: SILICONE
- COLOR: BLACK
- ADHESIVE TAPE: 3M or EQUIVALENT

*ACCEPTABLE FOR CUSTOMIZED REQUEST

◎ 我司可接受特别尺寸订购

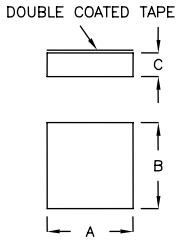

PART NO	A	B	C	PACKAGE
L040401	4.0	4.0	1.0	2000
L040402	4.0	4.0	2.0	
L040402A	4.0	4.0	2.5	
L040403	4.0	4.0	3.0	
L040404	4.0	4.0	4.0	
L050302	5.0	3.0	2.5	
L050501KM	5.0	5.0	1.0	
L050502	5.0	5.0	2.0	
L050502C	5.0	5.0	2.5	
L050503	5.0	5.0	3.0	
L050504	5.0	5.0	4.0	
L050506	5.0	5.0	6.5	
L060201C	6.0	2.0	1.5	
L060602D	6.0	6.0	2.0	
L060602A	6.0	6.0	2.5	
L060603	6.0	6.0	3.0	
L060604	6.0	6.0	4.0	
L070707	6.5	6.5	6.5	
L080202C	8.0	2.5	2.2	
L080203	8.0	2.5	3.0	
L080403	8.0	4.0	3.5	
L080405	8.0	4.0	5.0	
L080602A	8.0	6.0	2.3	
L080802	8.0	8.0	2.5	
L080803	8.0	8.0	3.5	
L080804	8.0	8.0	4.0	
L080805	8.0	8.0	5.0	
L080806	8.0	8.0	6.0	
L080809	8.0	8.0	9.0	
L080811	8.0	8.0	11.5	
L100502A	10.0	5.0	2.5	
L100503A	10.0	5.0	3.5	
L100505	10.0	5.0	5.0	
L100705	10.0	7.0	5.0	
L100801A	10.0	8.0	1.8	
L100802	10.0	8.0	2.5	
L100805	10.0	8.0	5.0	
L101001	10.0	10.0	1.0	
L101002	10.0	10.0	2.5	
L101003A	10.0	10.0	3.0	

PART NO	A	B	C	PACKAGE
L101003	10.0	10.0	3.5	2000
L101004	10.0	10.0	4.0	
L101004A	10.0	10.0	4.6	
L101005	10.0	10.0	5.0	
L120802	12.0	8.0	2.5	
L120803	12.0	8.0	3.5	
L121003	12.0	10.0	3.5	
L121202	12.0	12.0	2.5	
L121203	12.0	12.0	3.5	
L121204	12.0	12.0	4.0	
L121205	12.0	12.0	5.0	
L150508	15.0	5.0	0.8	
L150603	15.0	6.0	3.0	
L150803	15.0	8.0	3.0	
L151005	15.0	10.0	5.0	
L160805	16.0	8.0	5.0	
L180802	18.0	8.0	2.5	
L180803	18.0	8.0	3.5	
L180804	18.0	8.0	4.0	
L180805	18.0	8.0	5.0	
L181003	18.0	10.0	3.5	
L181004	18.0	10.0	4.0	
L181005	18.0	10.0	5.0	
L181202	18.0	12.0	2.5	
L181204	18.0	12.0	4.0	
L181205	18.0	12.0	5.0	
L181802	18.0	18.0	2.5	
L181803	18.0	18.0	3.5	
L181804	18.0	18.0	4.0	
L181805	18.0	18.0	5.0	1000
L201002S	20.0	10.0	2.5	500
L201008	20.0	10.0	8.0	
L251501	25.0	15.0	1.5	
L281901M	28.5	19.0	0.5	
L303008	30.0	30.0	8.0	
L351002	35.0	10.0	2.3	
L400602A	40.0	6.4	2.0	
L454504	45.0	45.0	4.0	
L602005	60.0	20.0	5.0	
L18004003	180.0	40.0	3.0	
L3300702A	330.8	7.2	2.0	

垫座 SILICONE RUBBER FOOT 9-11-1

- MATERIAL: SILICONE
- COLOR: BLACK
- ADHESIVE TAPE: 3M or EQUIVALENT

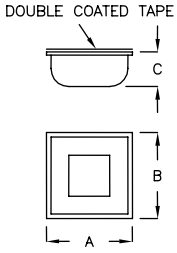

PART NO	A	B	C	PACKAGE
Q202008	20.4	20.4	8.0	500
Q381015C	38.0	10.5	14.5	200
Q381410C	38.0	14.5	10.5	500

垫座 SILICONE RUBBER FOOT 9-11-2

- MATERIAL: SILICONE
- COLOR: BLACK
- ADHESIVE TAPE: 3M or EQUIVALENT

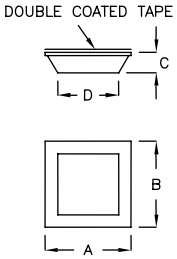

PART NO	A	B	C	D	PACKAGE
T110803	10.5	10.5	3.0	8.0	2000
T130706	12.7	12.7	6.0	6.8	
T130903	12.7	12.7	3.0	9.0	
T131003	12.7	12.7	3.1	10.0	
T202023	20.0	20.0	23.0	17.8	500
T211308	20.5	20.5	7.6	12.3	

垫座 SILICONE RUBBER FOOT 9-11-3

- MATERIAL: SILICONE
- COLOR: BLACK
- ADHESIVE TAPE: 3M or EQUIVALENT

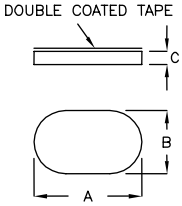

PART NO	A	B	C	PACKAGE
GLQ-2K	18.4	6.4	2.0	2000
GLQ-12	12.0	4.5	1.2	
GLQ-16	16.0	8.0	2.0	
GLQ-16A	16.0	8.0	2.5	

垫座 SILICONE RUBBER FOOT 9-11-4

- MATERIAL: SILICONE
- COLOR: BLACK
- ADHESIVE TAPE: 3M or EQUIVALENT

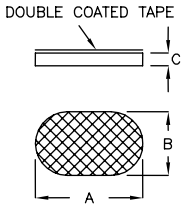

PART NO	A	B	C	PACKAGE
GLQ-19	19.4	7.4	1.2	2000
GLQ-3H	26.8	12.8	3.0	1000

垫座 SILICONE RUBBER FOOT 9-11-5

- MATERIAL: SILICONE
- COLOR: BLACK
- ADHESIVE TAPE: 3M or EQUIVALENT

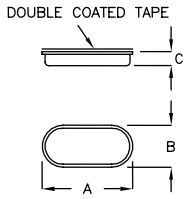

PART NO	A	B	C	PACKAGE
GLQ-13	13.0	6.0	2.0	2000
GLQ-3K	13.1	6.1	3.5	1000

垫座 SILICONE RUBBER FOOT 9-12-1

- MATERIAL: SILICONE
- COLOR: BLACK
- ADHESIVE TAPE: 3M or EQUIVALENT

PART NO	A	B	C	PACKAGE
GLQ-2J	41.5	22.1	2.5	500

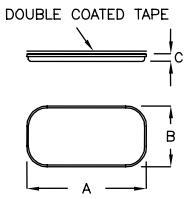

垫座 SILICONE RUBBER FOOT 9-12-2

- MATERIAL: SILICONE
- COLOR: BLACK
- ADHESIVE TAPE: 3M or EQUIVALENT

PART NO	A	B	C	PACKAGE
GLC-2A	37.05	20.5	2.5	1000

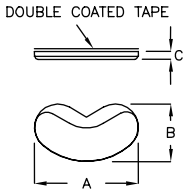

垫座 SILICONE RUBBER FOOT 9-12-3

- MATERIAL: SILICONE
- COLOR: BLACK
- ADHESIVE TAPE: 3M or EQUIVALENT

PART NO	A	B	C	D	PACKAGE
GTT-45	45.0	15.0	2.5	5.0	2000

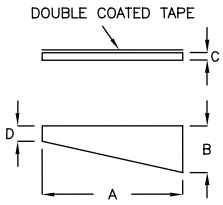

垫座 SILICONE RUBBER FOOT 9-12-4

- MATERIAL: SILICONE
- COLOR: BLACK
- ADHESIVE TAPE: 3M or EQUIVALENT

PART NO	A	B	C	D	PACKAGE
GXA-01	20.0	10.0	1.5	ø3.5	2000

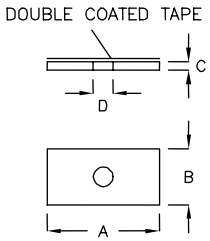

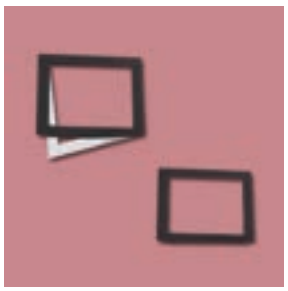

垫座 SILICONE RUBBER FOOT 9-12-5

- MATERIAL: SILICONE
- COLOR: BLACK
- ADHESIVE TAPE: 3M or EQUIVALENT

PART NO	A	B	C	PACKAGE
GSP-24	24.0	24.0	0.6	500

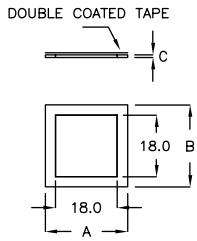

返回图片索引

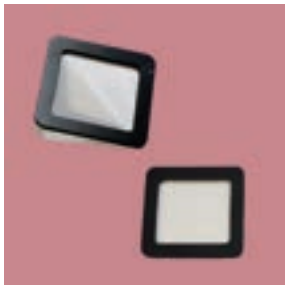

垫座 SILICONE RUBBER FOOT 9-13-1

- MATERIAL: SILICONE
- COLOR: BLACK
- ADHESIVE TAPE: 3M or EQUIVALENT

PART NO	A	B	C	PACKAGE
LDA-3901XB	39.6	39.6	1.9	400

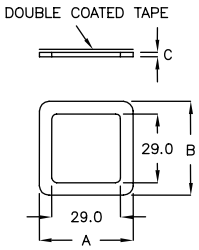

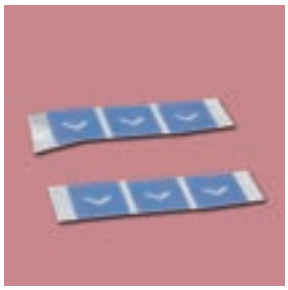

垫座 SILICONE RUBBER FOOT 9-13-2

- MATERIAL: SILICONE
- COLOR: BLUE
- ADHESIVE TAPE: 3M or EQUIVALENT

PART NO	A	B	C	PACKAGE
GLD-21	21.0	21.0	0.5	500

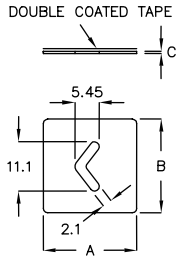

10

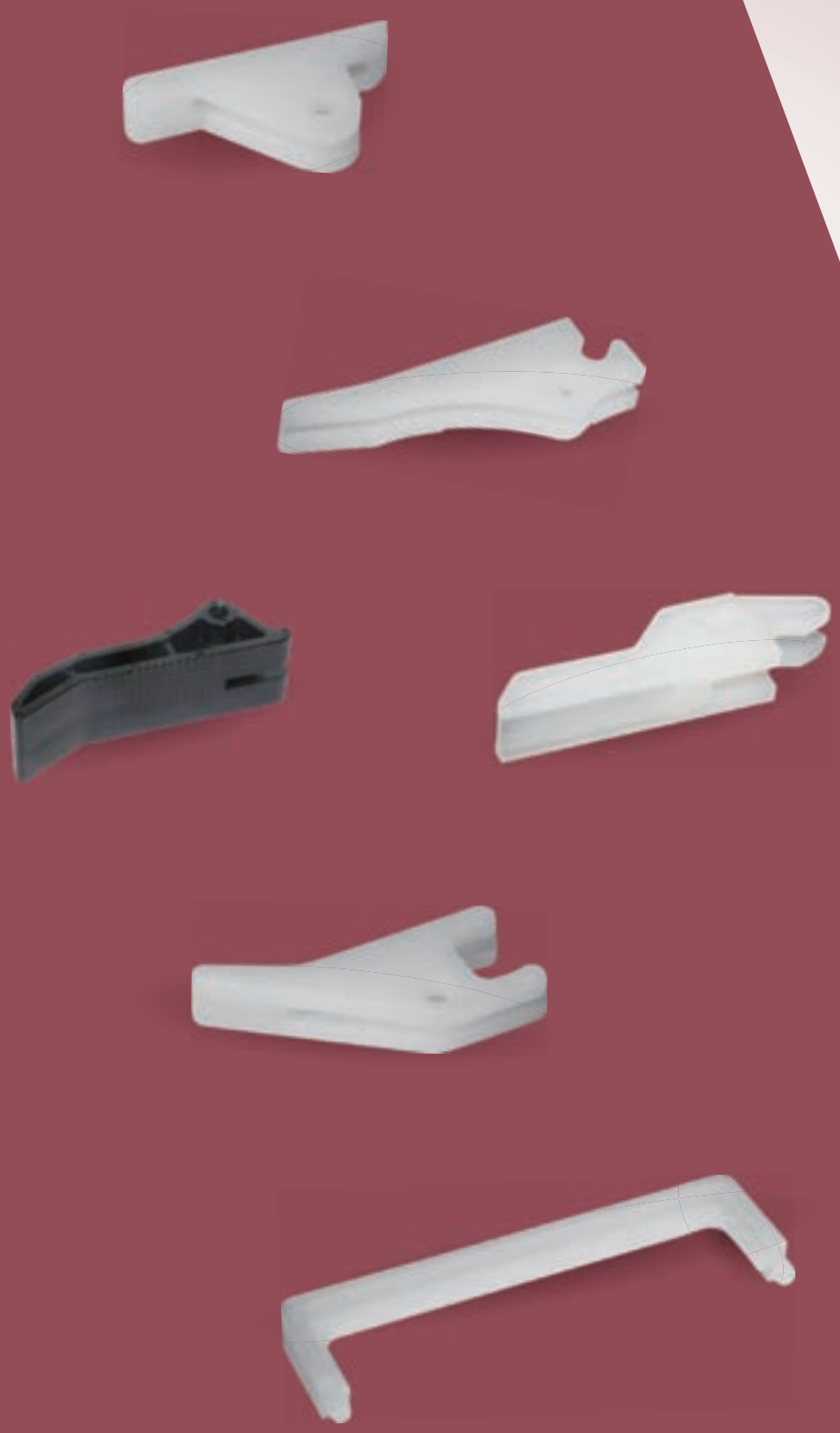

拉柄

CIRCUIT BOARD EJECTOR

返回图片索引

把手盖 EJECTOR COVER 10-2-1

- MATERIAL: ABS+PC
- FLAME CLASS: 94V-0
- COLOR: ORANGE

PART NO	A	B	PACKAGE
MKL-01	5.6	2.6	500

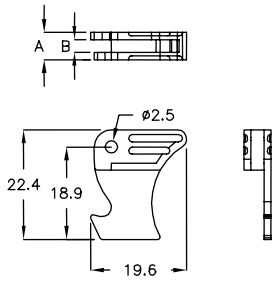

把手盖 EJECTOR COVER 10-2-2

- MATERIAL: ABS+PC
- FLAME CLASS: 94V-0
- COLOR: BLACK

PART NO	A	B	PACKAGE
MKL-2A	5.6	2.6	500

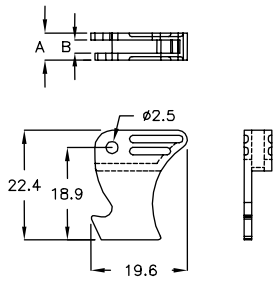

拉柄 CIRCUIT BOARD EJECTOR 10-2-3

- MATERIAL: POM(UL)
- FLAME CLASS: 94HB
- COLOR: NATURAL

*WITH PIN
附 PIN

PART NO	PACKAGE
CP-10	200

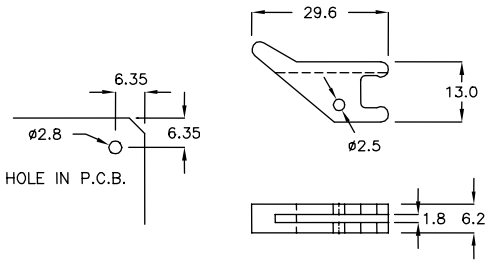

拉柄 CIRCUIT BOARD EJECTOR 10-2-4

- MATERIAL: NYLON 66(UL)
- FLAME CLASS: 94V-0/94V-2
- COLOR: NATURAL

*WITH PIN
附 PIN

PART NO	PACKAGE
CP-15	200

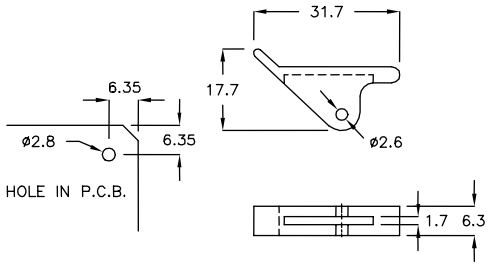

拉柄 CIRCUIT BOARD EJECTOR 10-2-5

- MATERIAL: NYLON 66(UL)
- FLAME CLASS: 94V-0/94V-2
- COLOR: NATURAL

*WITH PIN
附 PIN

PART NO	PACKAGE
CP-20	200

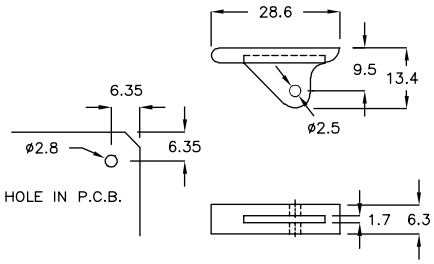

拉柄 CIRCUIT BOARD EJECTOR 10-3-1

- MATERIAL: NYLON 66(UL)
- FLAME CLASS:94V-0/94V-2
- COLOR: NATURAL

*WITH PIN
附 PIN

PART NO	PACKAGE
CP−25	200

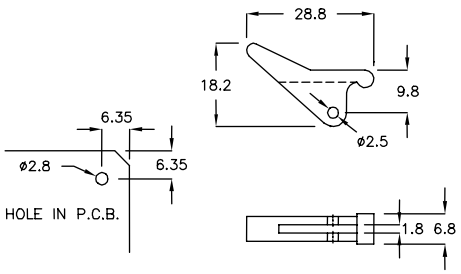

拉柄 CIRCUIT BOARD EJECTOR 10-3-2

- MATERIAL: NYLON 66(UL)
- FLAME CLASS: 94V-0/94V-2
- COLOR: NATURAL

*WITH PIN
附 PIN

PART NO	PACKAGE
CP−30	200

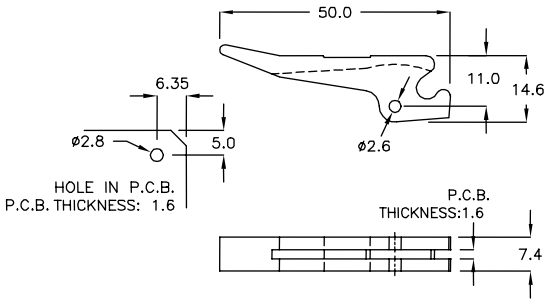

拉柄 CIRCUIT BOARD EJECTOR 10-3-3

- MATERIAL: NYLON 66(UL)
- FLAME CLASS: 94V-0/94V-2
- COLOR: NATURAL

*WITH PIN
附 PIN

PART NO	PACKAGE
CP−31	200

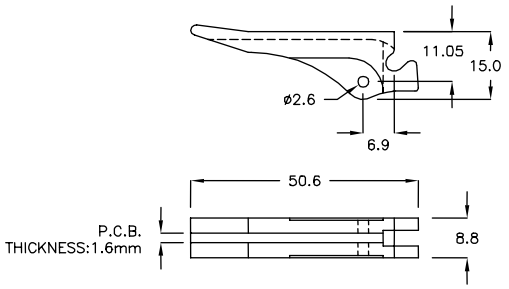

拉柄 CIRCUIT BOARD EJECTOR 10-3-4

- MATERIAL: NYLON 66(UL)
- FLAME CLASS: 94V-0/94V-2
- COLOR: NATURAL

*WITH PIN
附 PIN

PART NO	PACKAGE
CP−31C	200

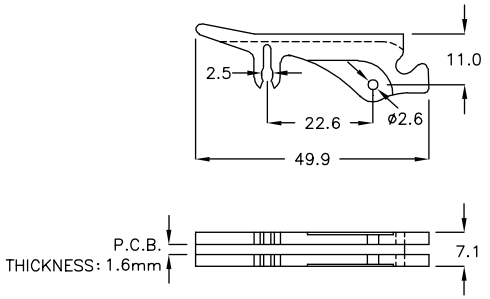

拉柄 CIRCUIT BOARD EJECTOR 10-3-5

- MATERIAL: NYLON 66(UL)
- FLAME CLASS: 94V-0/94V-2
- COLOR: NATURAL

*WITH PIN
附 PIN

PART NO	PACKAGE
CP−32	200

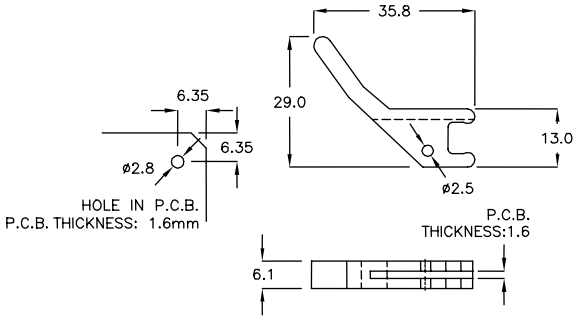

返回图片索引

拉柄 CIRCUIT BOARD EJECTOR 10-4-1

- MATERIAL: NYLON 66(UL)
- FLAME CLASS: 94V-0/94V-2
- COLOR: NATURAL

PART NO	PACKAGE
CP-33	500

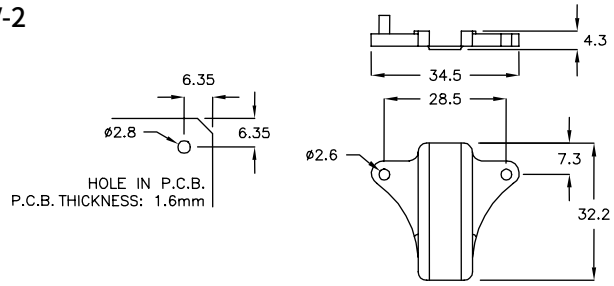

拉柄 CIRCUIT BOARD EJECTOR 10-4-2

- MATERIAL: NYLON 66(UL)
- FLAME CLASS: 94V-0/94V-2
- COLOR: NATURAL

*WITH PIN
附 PIN

PART NO	PACKAGE
CP-034	200

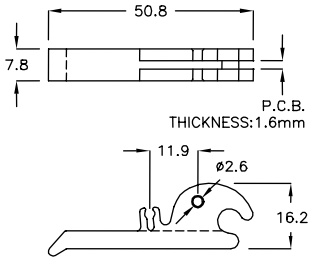

拉柄 CIRCUIT BOARD EJECTOR 10-4-3

- MATERIAL: NYLON 66(UL)
- FLAME CLASS: 94V-0/94V-2
- COLOR: NATURAL

*WITH PIN
附 PIN

PART NO	PACKAGE
CP-35	200

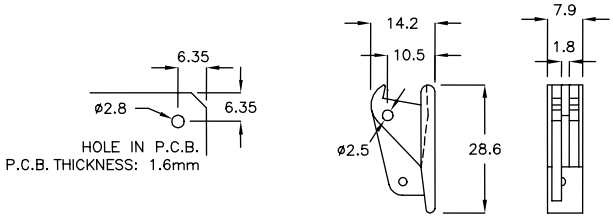

拉柄 CIRCUIT BOARD EJECTOR 10-4-4

- MATERIAL: PC(UL)
- FLAME CLASS: 94V-2
- COLOR: BLACK

*WITH PIN
附 PIN

PART NO	PACKAGE
CP-36	200

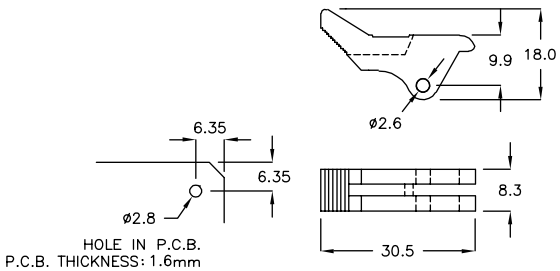

拉柄 CIRCUIT BOARD EJECTOR 10-4-5

- MATERIAL: NYLON 66(UL)
- FLAME CLASS: 94V-0/94V-2
- COLOR: NATURAL

*WITH PIN
附 PIN

PART NO	PACKAGE
CP-37	200

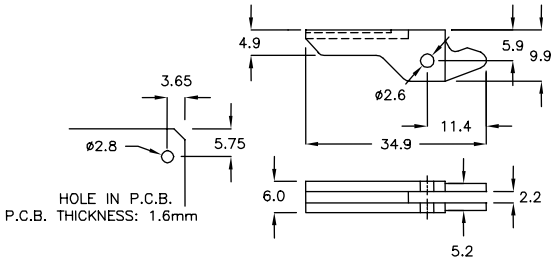

拉柄 CIRCUIT BOARD EJECTOR 10-5-1

- MATERIAL: NYLON 66(UL)
- FLAME CLASS: 94V-0/94V-2
- COLOR: NATURAL

*WITH PIN
附 PIN

PART NO	PACKAGE
CP-39	200

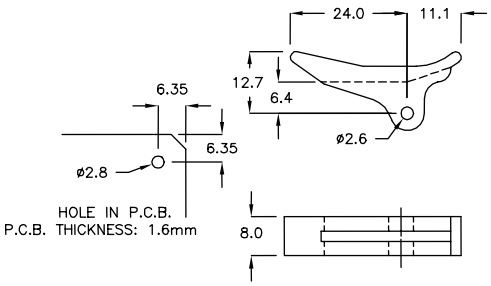

拉柄 CIRCUIT BOARD EJECTOR 10-5-2

- MATERIAL: NYLON 66(UL)
- FLAME CLASS: 94V-0/94V-2
- COLOR: BLACK

PART NO	PACKAGE
CP-50D	200

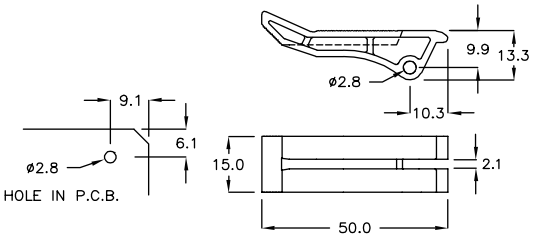

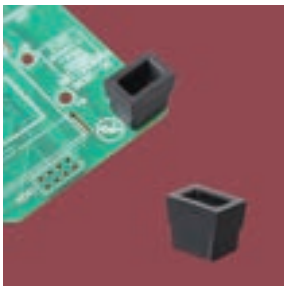

把手盖 EJECTOR COVER 10-5-3

- MATERIAL: NYLON 66(UL)
- FLAME CLASS: 94V-0/94V-2
- COLOR: BLACK
- USE M2 TAPPING SCREW

NEW

	PART NO	A	PACKAGE
★	MHLG-11A	9.0	500

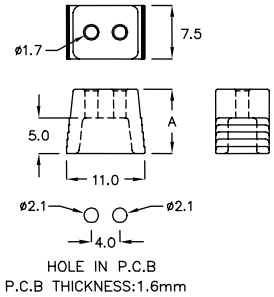

拉柄 CIRCUIT BOARD EJECTOR 10-5-4

- MATERIAL: NYLON 66(UL)
- FLAME CLASS: 94V-0/94V-2
- COLOR: NATURAL

PART NO	PACKAGE
CP-50	100

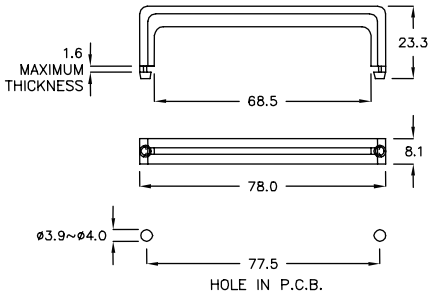

拉柄 CIRCUIT BOARD EJECTOR 10-5-5

- MATERIAL: NYLON 66(UL)
- FLAME CLASS: 94V-0/94V-2
- COLOR: NATURAL

PART NO	PACKAGE
CP-60	100

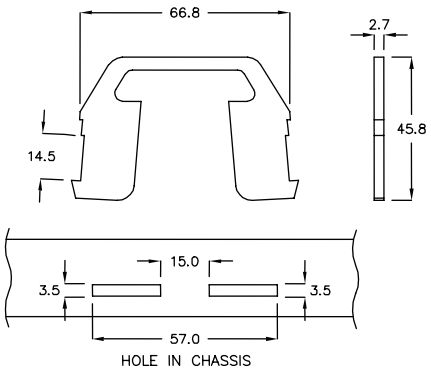

11

導槽

P.C.B GUIDE RAIL

返回图片索引

印刷电路板导槽 PCB GUIDE RAIL 11-2-1

- MATERIAL: NYLON 66(UL)
- FLAME CLASS: 94V-0/94V-2
- COLOR: BLACK

NEW

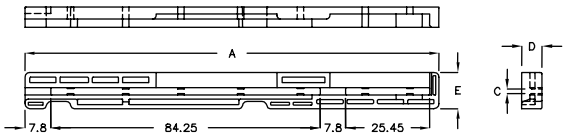

PART NO	A	C	D	E	PACKAGE
★ CG-128YD	128.0	1.6	6.1	11.0	100

印刷电路板导槽 PCB GUIDE RAIL 11-2-2

- MATERIAL: NYLON 66(UL)
- FLAME CLASS: 94V-0/94V-2
- COLOR: NATURAL
- USE M3x6 FLAT HEAD SCREW

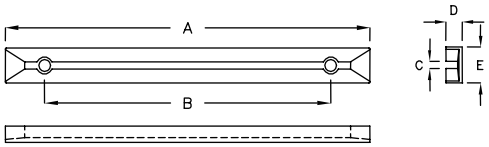

PART NO	A	B	C	D	E	PACKAGE
CG-9	89.0	64.5	1.9	4.5	9.8	100
CG-9AS	100.0	77.4	2.2	7.1	10.0	
CG-9L	91.0	67.0	1.9	8.8	9.2	
CG-12	119.0	94.5	1.6	4.5	9.8	
CG-12F	119.0	94.5	1.9	4.5	9.8	
CG-14	139.8	114.5	1.9	4.3	9.7	
CG-16	158.7	135.0	1.9	4.3	9.7	
CG-18	180.0	150.0	3.5	9.0	12.0	

印刷电路板导槽 PCB GUIDE RAIL 11-2-3

- MATERIAL: NYLON 66(UL)
- FLAME CLASS: 94V-0/94V-2
- COLOR: NATURAL

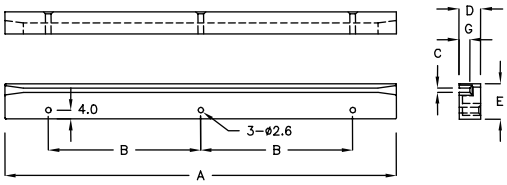

PART NO	A	B	C	D	E	G	PACKAGE
CF-180	180.5	70.0	2.0	10.0	16.0	5.0	50

印刷电路板导槽 PCB GUIDE RAIL 11-2-4

- MATERIAL: NYLON 66(UL)
- FLAME CLASS: 94V-0/94V-2
- COLOR: NATURAL
- NO EXTRA SCREW NEEDED

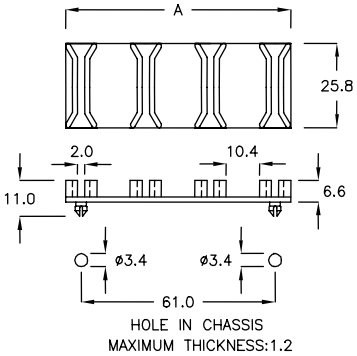

PART NO	A	PACKAGE
CG-2Ax4	70.5	50

返回图片索引

印刷电路板导槽 PCB GUIDE RAIL 11-3-1

- MATERIAL: NYLON 66(UL)
- FLAME CLASS: 94V-0/94V-2
- COLOR: NATURAL

NEW

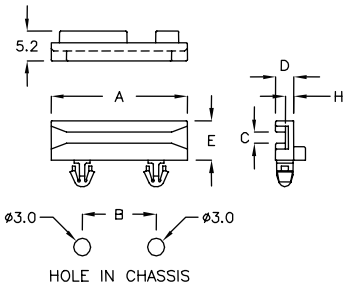

	PART NO	A	B	C	D	E	H	CHASSIS THICKNESS	PACKAGE
★	CG-24AF	24.0	13.0	2.0	3.2	7.0	1.5	1.6	500

印刷电路板导槽 PCB GUIDE RAIL 11-3-2

- MATERIAL: NYLON 66(UL)
- FLAME CLASS: 94V-0/94V-2
- COLOR: NATURAL

NEW

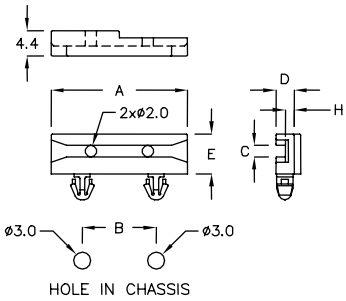

	PART NO	A	B	C	D	E	H	CHASSIS THICKNESS	PACKAGE
★	CG-24DK	24.0	13.0	2.0	3.2	7.0	1.5	1.6	500

印刷电路板导槽 PCB GUIDE RAIL 11-3-3

- MATERIAL: NYLON 66(UL)
- FLAME CLASS: 94V-0/94V-2
- COLOR: NATURAL
- NO EXTRA SCREW NEEDED

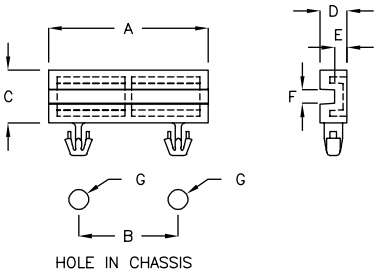

PART NO	A	B	C	D	E	F	G	CHASSIS THICKNESS	PACKAGE
CG-24RM	24.0	15.0	7.8	4.0	1.8	2.0	ø3.0	2.0	500

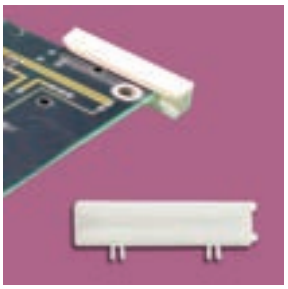

印刷电路板导槽 PCB GUIDE RAIL 11-3-4

- MATERIAL: NYLON 66(UL)
- FLAME CLASS: 94V-0/94V-2
- COLOR: NATURAL
- NO EXTRA SCREW NEEDED

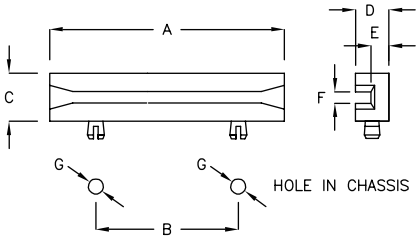

PART NO	A	B	C	D	E	F	G	MAXIMUM THICKNESS	PACKAGE
CG-4A	38.3	20.2	9.3	6.5	3.5	2.3	ø3.0	1.2	500

返回图片索引

印刷电路板导槽 PCB GUIDE RAIL 11-4-1

- MATERIAL: NYLON 66(UL)
- FLAME CLASS: 94V-0/94V-2
- COLOR: NATURAL
- NO EXTRA SCREW NEEDED

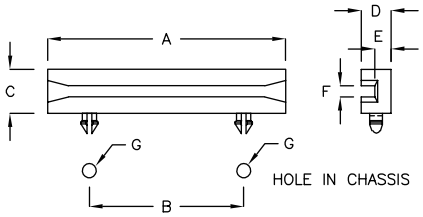

PART NO	A	B	C	D	E	F	G	MAXIMUM THICKNESS	PACKAGE
CG-04E	38.3	20.0	9.3	6.5	3.5	1.8	ø3.5	1.6	500
CG-04C	38.3	20.2	9.3	6.5	3.5	2.3	ø3.2	1.6	
CG-04H	50.0	40.0	7.0	6.0	3.0	2.0	ø3.2	1.6	200
CG-08C	80.5	60.0	9.4	6.4	3.4	2.3	ø3.2	1.6	100
CG-08D	80.5	60.0	8.0	6.0	3.0	2.0	ø3.2	1.6	
CG-08H	80.5	60.0	8.0	6.0	3.0	2.0	ø3.2	2.6	

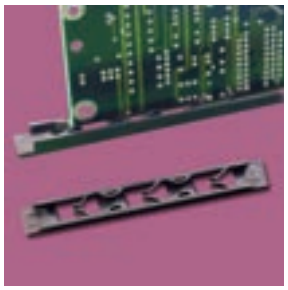

印刷电路板导槽 PCB GUIDE RAIL 11-4-2

- MATERIAL: NYLON 66(UL)
- FLAME CLASS: 94V-0/94V-2
- COLOR: BLACK
- NO EXTRA SCREW NEEDED

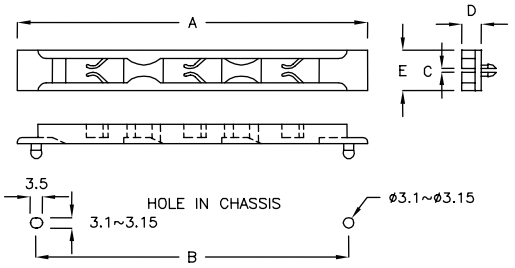

PART NO	A	B	C	D	E	MAXIMUM THICKNESS	PACKAGE
CG-10B	102.8	91.9	1.1	5.6	11.9	2.3	100

印刷电路板导槽 PCB GUIDE RAIL 11-4-3

- MATERIAL: NYLON 66(UL)
- FLAME CLASS: 94V-0/94V-2
- COLOR: NATURAL
- NO EXTRA SCREW NEEDED

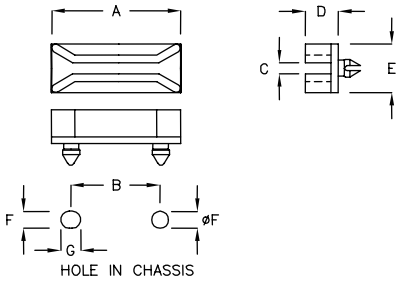

PART NO	A	B	C	D	E	F	G	MAXIMUM THICKNESS	PACKAGE
CG-2A	26.0	18.0	1.9	6.8	9.7	3.4	4.0	1.2	500

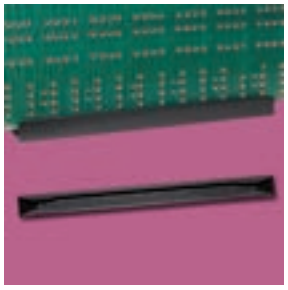

印刷电路板导槽 PCB GUIDE RAIL 11-4-4

- MATERIAL: NYLON 66(UL)
- FLAME CLASS: 94V-0/94V-2
- COLOR: BLACK
- NO EXTRA SCREW NEEDED

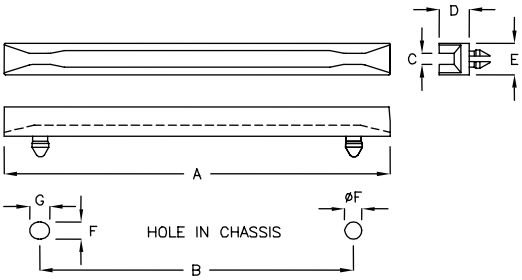

PART NO	A	B	C	D	E	F	G	MAXIMUM THICKNESS	PACKAGE
CG-06A	76.8	62.5	2.2	5.9	6.3	3.4	4.0	1.0	200

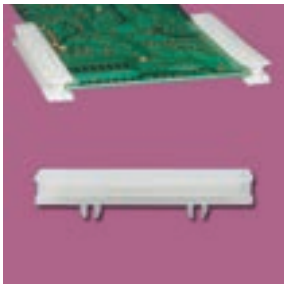

印刷电路板导槽 PCB GUIDE RAIL 11-5-1

- MATERIAL: NYLON 66(UL)
- FLAME CLASS: 94V-0/94V-2
- COLOR: NATURAL
- NO EXTRA SCREW NEEDED

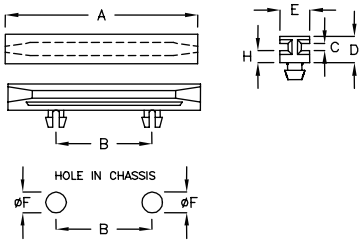

PART NO	A	B	C	D	E	F	H	MAXIMUM THICKNESS	PACKAGE
CG-5D	50.8	25.4	2.0	7.0	7.9	4.4	3.2	1.6	200

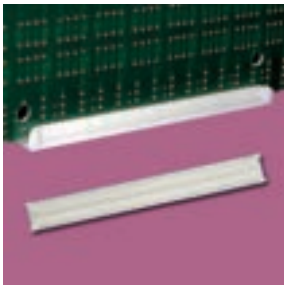

印刷电路板导槽 PCB GUIDE RAIL 11-5-2

- MATERIAL: NYLON 66(UL)
- FLAME CLASS: 94V-0/94V-2
- COLOR: NATURAL
- NO EXTRA SCREW NEEDED

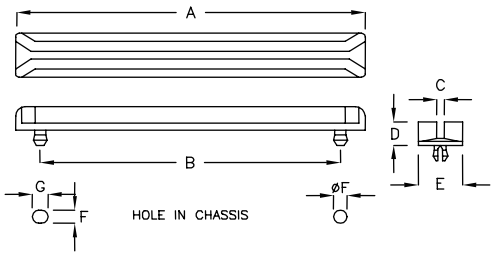

PART NO	A	B	C	D	E	F	G	MAXIMUM THICKNESS	PACKAGE
CG-9B	89.2	76.85	1.9	6.0	11.3	3.4	4.0	1.2	100

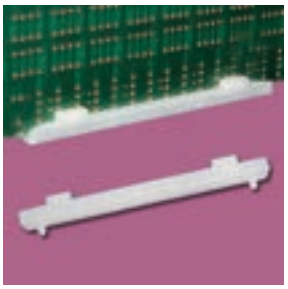

印刷电路板导槽 PCB GUIDE RAIL 11-5-3

- MATERIAL: NYLON 66(UL)
- FLAME CLASS: 94V-0/94V-2
- COLOR: NATURAL
- NO EXTRA SCREW NEEDED

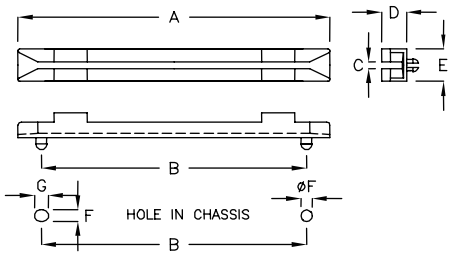

PART NO	A	B	C	D	E	F	G	MAXIMUM THICKNESS	PACKAGE
CG-9AW	89.7	76.7	1.9	11.6	9.7	3.4	4.0	1.2	100
CG-9D	89.7	76.8	1.9	7.1	9.5	3.4	4.0	1.2	

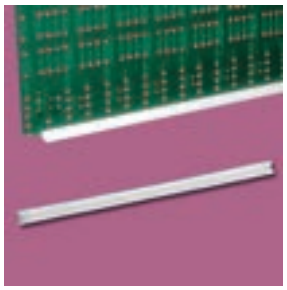

印刷电路板导槽 PCB GUIDE RAIL 11-5-4

- MATERIAL: NYLON 66(UL)
- FLAME CLASS: 94V-0/94V-2
- COLOR: NATURAL
- NO EXTRA SCREW NEEDED

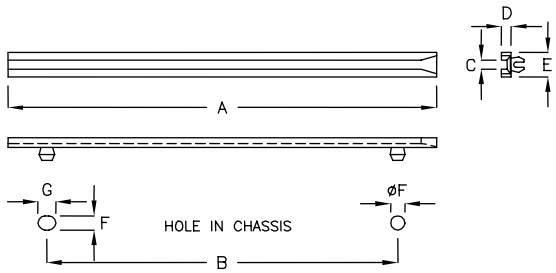

PART NO	A	B	C	D	E	F	G	MAXIMUM THICKNESS	PACKAGE
CG-14C	140.2	114.8	2.0	3.2	8.0	4.8	5.9	1.2	100
CG-14D	140.2	114.8	3.0	3.2	8.0	4.8	5.9	1.7	

返回图片索引

印刷电路板导槽 PCB GUIDE RAIL 11-6-1

- MATERIAL: NYLON 66(UL)
- FLAME CLASS: 94V-0/94V-2
- COLOR: NATURAL
- NO EXTRA SCREW NEEDED

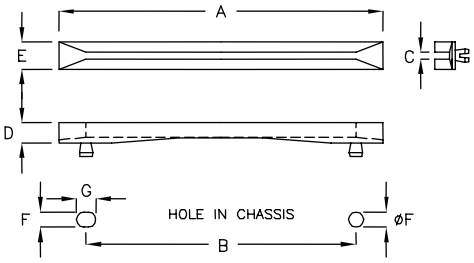

PART NO	A	B	C	D	E	F	G	MAXIMUM THICKNESS	PACKAGE
CG-7B	76.2	63.5	1.9	4.8	6.4	3.2	4.1	1.3	100

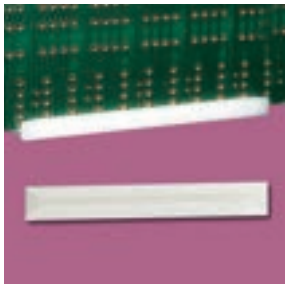

印刷电路板导槽 PCB GUIDE RAIL 11-6-2

- MATERIAL: NYLON 66(UL)
- FLAME CLASS: 94V-0/94V-2
- COLOR: NATURAL
- NO EXTRA SCREW NEEDED

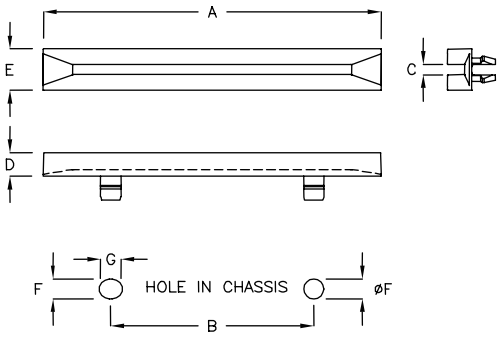

PART NO	A	B	C	D	E	F	G	MAXIMUM THICKNESS	PACKAGE
CG-06H	63.5	38.1	1.9	4.5	7.9	4.6	5.0	1.6	200
CG-6J	63.5	38.1	2.3	2.8	4.6	3.4	4.0	1.0	
CG-5QT	63.5	38.1	2.3	6.4	6.4	4.5	5.1	1.0	

印刷电路板导槽 PCB GUIDE RAIL 11-6-3

- MATERIAL: NYLON 66(UL)
- FLAME CLASS: 94V-0/94V-2
- COLOR: NATURAL
- NO EXTRA SCREW NEEDED

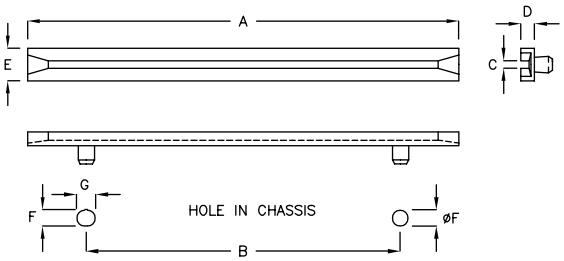

PART NO	A	B	C	D	E	F	G	MAXIMUM THICKNESS	PACKAGE
CG-10N	101.6	88.9	1.9	4.4	6.4	3.2	4.0	1.1	100
CG-16N	164.1	152.4	2.0	4.4	6.5	3.2	3.9	1.1	

返回图片索引

印刷电路板导槽 PCB GUIDE RAIL 11-7-1

- MATERIAL: NYLON 66(UL)
- FLAME CLASS: 94V-0 / 94V-2
- COLOR: NATURAL
- NO EXTRA SCREW NEEDED

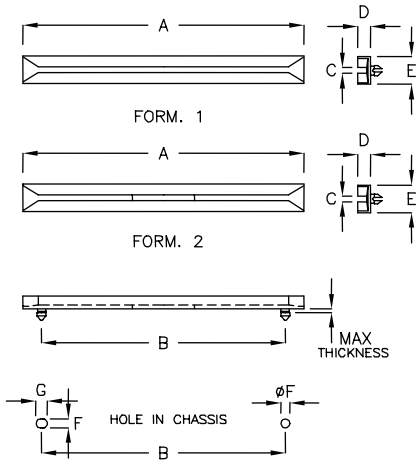

PART NO	A	B	C	D	E	F	G	H	MAXIMUM THICKNESS	FORM	PACKAGE
CG−3A	38.0	25.4	1.9	4.6	9.6	3.4	4.0	1.5	1.2	1	500
CG−5A	50.8	38.0	2.3	4.6	9.6	3.4	4.0	1.5	1.1	1	200
CG−7A	76.6	63.5	2.2	4.6	10.0	3.4	4.0	1.4	1.2	1	100
CG−7C	76.6	63.5	2.1	4.1	10.0	3.4	4.0	1.1	1.2	1	
CG−9A	89.7	76.7	1.9	4.5	9.7	3.4	4.0	1.5	1.2	2	
CG−9F	89.2	76.7	2.3	4.4	6.4	3.4	4.0	1.1	1.2	1	
CG−10A	102.1	89.5	2.2	4.6	6.3	3.4	4.0	1.1	1.2	1	
CG−10M	100.0	70.0	2.0	4.3	7.5	4.8	6.0	2.3	1.1	1	100
CG−10P	100.0	70.0	2.0	4.3	7.5	4.8	6.4	1.5	1.2	1	
CG−12D	114.3	88.9	1.9	6.4	6.4	4.8	5.5	1.3	1.2	1	
CG−13A	127.0	101.6	2.3	4.6	6.4	3.4	4.0	1.1	1.5	1	
CG−13C	110.0	101.6	2.3	4.6	6.4	3.4	4.0	1.1	1.2	1	
CG−14A	136.0	114.5	2.2	4.6	6.3	3.4	4.0	1.1	1.5	1	
CG−15C	153.8	141.6	2.1	4.8	6.5	3.4	4.0	1.4	1.2	1	
CG−18A	181.1	161.3	2.0	4.6	6.5	3.4	4.6	1.2	1.2	1	
CG−19A	191.1	177.0	2.0	5.5	6.4	3.4	4.0	1.8	1.2	1	
CG−21A	217.8	205.0	2.0	4.6	6.6	3.4	4.0	1.2	1.0	1	
CG−21B	218.7	205.0	2.2	7.7	6.6	3.4	4.0	1.3	1.2	1	

印刷电路板导槽 PCB GUIDE RAIL 11-7-2

- MATERIAL: NYLON 66(UL)
- FLAME CLASS: 94V-0 / 94V-2
- COLOR: NATURAL
- NO EXTRA SCREW NEEDED

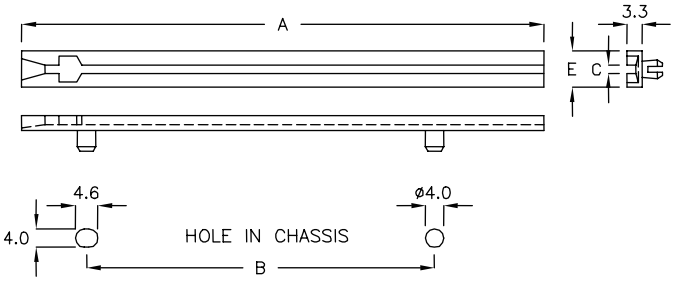

PART NO	A	B	C	E	MAXIMUM THICKNESS	PACKAGE
CG−11A	115.5	77.1	2.0	7.9	1.2	100

返回图片索引

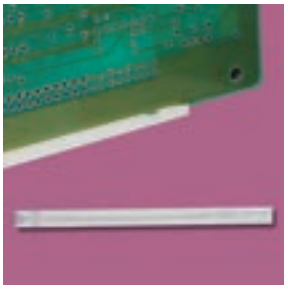

印刷电路板导槽 PCB GUIDE RAIL 11-8-1

- MATERIAL: NYLON 66(UL)
- FLAME CLASS: 94V-0/94V-2
- COLOR: NATURAL
- NO EXTRA SCREW NEEDED

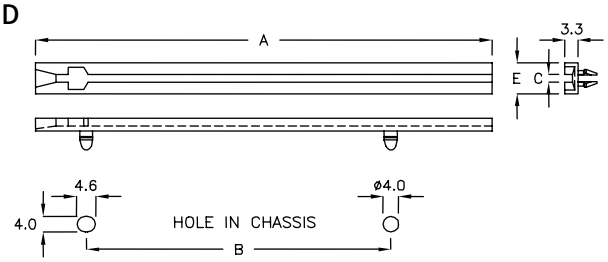

PART NO	A	B	C	E	MAXIMUM THICKNESS	PACKAGE
CG-11F	115.5	77.1	1.9	7.9	1.4	100
CG-92TK	92.0	67.4	1.9	7.9	1.4	

印刷电路板导槽 PCB GUIDE RAIL 11-8-2

- MATERIAL: NYLON 66(UL)
- FLAME CLASS: 94V-0/94V-2
- COLOR: NATURAL
- NO EXTRA SCREW NEEDED

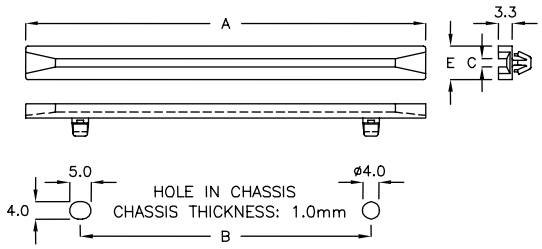

PART NO	A	B	C	E	PACKAGE
CG-92FM	92.8	67.4	1.9	7.9	100

印刷电路板导槽 PCB GUIDE RAIL 11-8-3

- MATERIAL: NYLON 66(UL)
- FLAME CLASS: 94V-0/94V-2
- COLOR: NATURAL
- NO EXTRA SCREW NEEDED

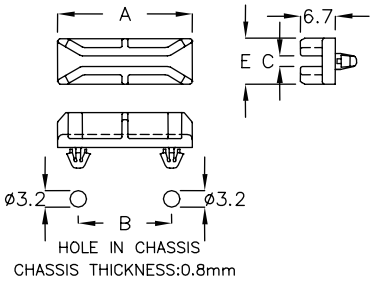

PART NO	A	B	C	E	PACKAGE
CG-2RQ	25.8	17.9	2.0	8.7	500

印刷电路板导槽 PCB GUIDE RAIL 11-8-4

- MATERIAL: NYLON 66(UL)
- FLAME CLASS: 94V-0/94V-2
- COLOR: NATURAL
- NO EXTRA SCREW NEEDED

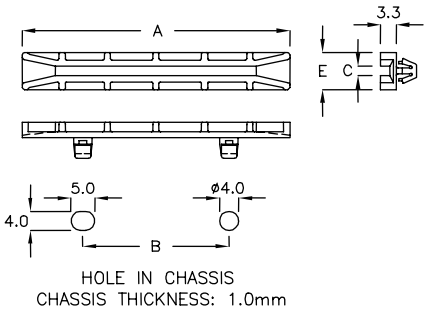

PART NO	A	B	C	E	PACKAGE
CG-56FY	56.0	30.6	2.0	7.8	200

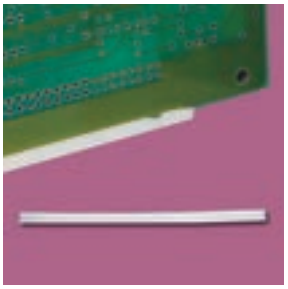

印刷电路板导槽 PCB GUIDE RAIL 11-9-1

- MATERIAL: NYLON 66(UL)
- FLAME CLASS: 94V-0/94V-2
- COLOR: NATURAL
- NO EXTRA SCREW NEEDED

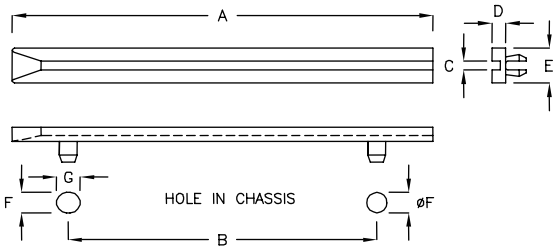

PART NO	A	B	C	D	E	F	G	MAXIMUM THICKNESS	PACKAGE
CG-20A	203.2	177.8	2.0	3.2	7.9	4.6	5.4	1.7	100

印刷电路板导槽 PCB GUIDE RAIL 11-9-2

- MATERIAL: NYLON 66(UL)
- FLAME CLASS: 94V-0/94V-2
- COLOR: BLACK
- NO EXTRA SCREW NEEDED

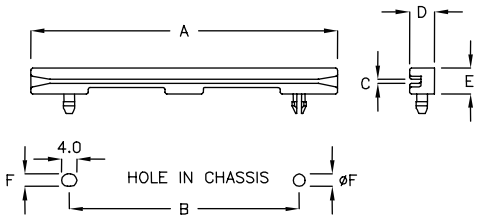

PART NO	A	B	C	D	E	F	MAXIMUM THICKNESS	PACKAGE
CG-08K	80.0	60.0	1.1	6.5	6.7	3.2	2.0	100

印刷电路板导槽 PCB GUIDE RAIL 11-9-3

- MATERIAL: NYLON 66(UL)
- FLAME CLASS: 94V-0/94V-2
- COLOR: NATURAL
- NO EXTRA SCREW NEEDED

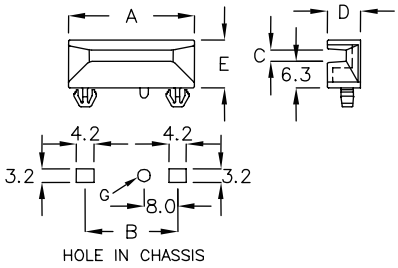

PART NO	A	B	C	D	E	G	CHASSIS THICKNESS	PACKAGE
CG-3WX	30.0	22.0	2.7	8.0	11.3	ø3.0	0.8	500

印刷电路板导槽 PCB GUIDE RAIL 11-9-4

- MATERIAL: NYLON 66(UL)
- FLAME CLASS: 94V-0/94V-2
- COLOR: NATURAL
- NO EXTRA SCREW NEEDED

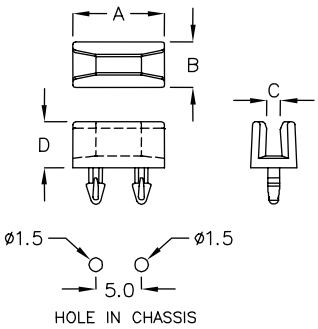

PART NO	A	B	C	D	CHASSIS THICKNESS	PACKAGE
CGD-1KF	10.0	5.0	1.7	5.0	1.6	500

返回图片索引

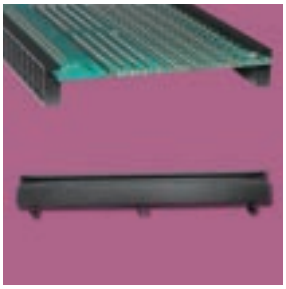

印刷电路板导槽 PCB GUIDE RAIL 11-10-1

- MATERIAL: NYLON 66(UL)
- FLAME CLASS: 94V-0/94V-2
- COLOR: BLACK
- NO EXTRA SCREW NEEDED

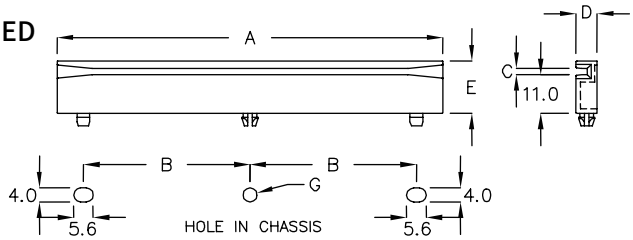

PART NO	A	B	C	D	E	G	CHASSIS THICKNESS	PACKAGE
CG-11K	110.0	47.5	1.8	6.0	14.9	ø4.0	1.2	100

印刷电路板导槽 PCB GUIDE RAIL 11-10-2

- MATERIAL: NYLON 66(UL)
- FLAME CLASS: 94V-0/94V-2
- COLOR: NATURAL
- NO EXTRA SCREW NEEDED

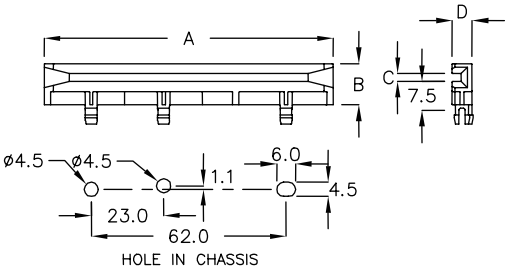

PART NO	A	B	C	D	MAXIMUM THICKNESS	PACKAGE
CGU-92F	92.0	13.2	2.5	6.4	3.0	100

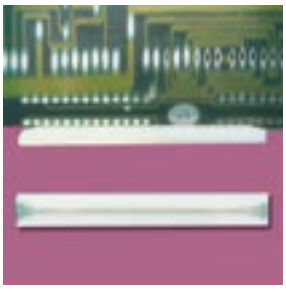

印刷电路板导槽 PCB GUIDE RAIL 11-10-3

- MATERIAL: NYLON 66(UL)
- FLAME CLASS: 94V-0/94V-2
- COLOR: NATURAL
- NO EXTRA SCREW NEEDED

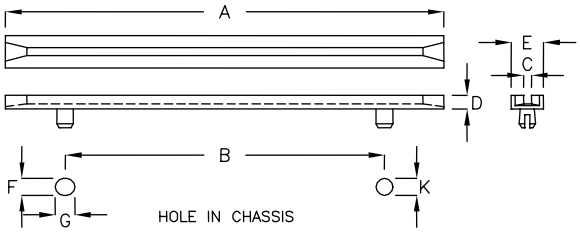

PART NO	A	B	C	D	E	F	G	K	CHASSIS THICKNESS	PACKAGE
CG-45RK	45.0	23.0	1.9	3.3	7.9	ø4.5	5.1	ø4.6	1.4~1.6	200
CG-5C	63.5	38.1	2.3	6.4	6.4	ø4.5	5.1	ø4.5	1.2~1.6	
CG-6F	63.5	38.1	1.9	4.5	7.9	ø4.6	5.0	ø4.6	1.2~1.6	
CG-08L	88.9	63.5	1.9	4.5	7.9	ø4.6	5.0	ø4.6	1.4~1.6	100
CG-88D	88.9	63.5	1.9	3.3	7.9	ø4.5	5.1	ø4.6	1.4~1.6	
CG-9AL	89.1	77.4	2.2	7.1	10.0	ø3.4	4.0	ø3.4	1.6	

返回图片索引

印刷电路板导槽 PCB GUIDE RAIL 11-11-1

- MATERIAL: NYLON 66(UL)
- FLAME CLASS: 94V-0/94V-2
- COLOR: BLACK
- NO EXTRA SCREW NEEDED

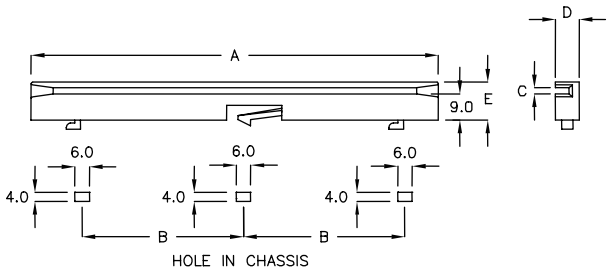

PART NO	A	B	C	D	E	MAXIMUM THICKNESS	PACKAGE
CG-16C	190.0	80.0	2.0	6.4	13.1	1.0	100

印刷电路板导槽 PCB GUIDE RAIL 11-11-2

- MATERIAL: NYLON 66(UL)
- FLAME CLASS: 94V-0/94V-2
- COLOR: NATURAL
- NO EXTRA SCREW NEEDED

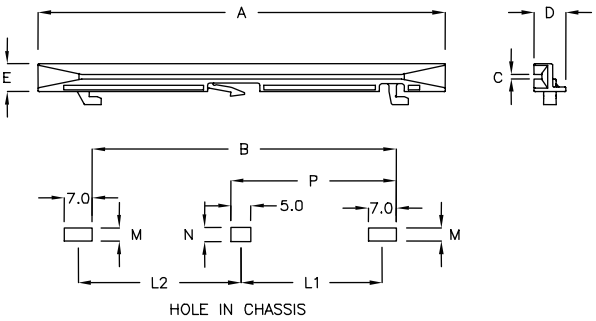

PART NO	A	B	C	D	E	M	N	P	L1	L2	MAXIMUM THICKNESS	PACKAGE
CG-8M	81.0	65.4	2.0	8.0	10.65	5.65	5.65	33.0	27.0	38.4	1.0	100
CG-10Q	101.6	75.9	1.2	7.9	7.0	3.3	3.6	41.3	35.3	40.6	1.0	100

印刷电路板导槽 PCB GUIDE RAIL 11-11-3

- MATERIAL: NYLON 66(UL)
- FLAME CLASS: 94V-0/94V-2
- COLOR: NATURAL
- NO EXTRA SCREW NEEDED

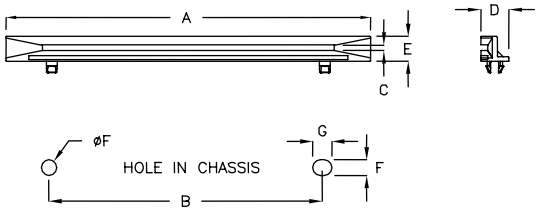

PART NO	A	B	C	D	E	F	G	MAXIMUM THICKNESS	PACKAGE
CG-10K	101.6	76.2	1.2	7.9	7.0	4.4	5.4	1.0	100

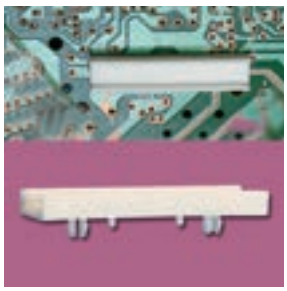

印刷电路板导槽 PCB GUIDE RAIL 11-12-1

- MATERIAL: NYLON 66(UL)
- FLAME CLASS: 94V-0/94V-2
- COLOR: NATURAL
- NO EXTRA SCREW NEEDED

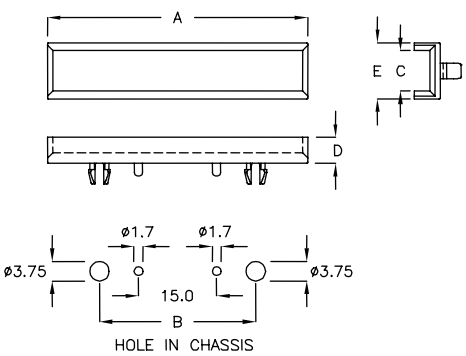

PART NO	A	B	C	D	E	MAXIMUM THICKNESS	PACKAGE
CG-5K	50.0	30.0	7.75	5.0	10.75	1.0	200

印刷电路板导槽 PCB GUIDE RAIL 11-12-2

- MATERIAL: PC(UL)
- FLAME CLASS: 94V-2
- COLOR: BLACK
- NO EXTRA SCREW NEEDED

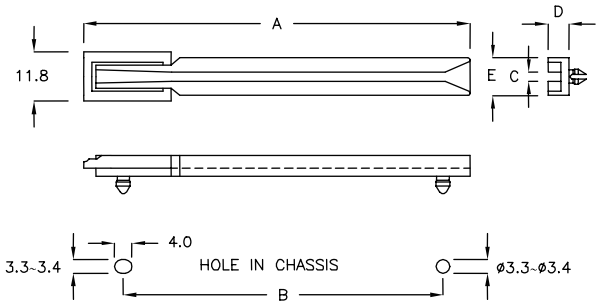

PART NO	A	B	C	D	E	MAXIMUM THICKNESS	PACKAGE
CG-09H	92.7	76.7	2.2	5.0	9.0	1.2	100
CG-09J	99.5	76.7	2.2	5.0	9.0	1.2	
CG-09C	72.6	50.0	1.9	5.0	9.0	1.0	

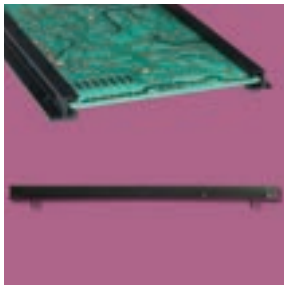

印刷电路板导槽 PCB GUIDE RAIL 11-12-3

- MATERIAL: NYLON 66(UL)
- FLAME CLASS: 94V-0/94V-2
- COLOR: BLACK
- NO EXTRA SCREW NEEDED

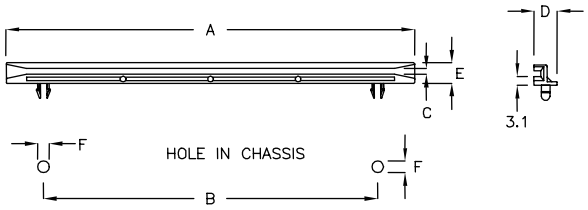

PART NO	A	B	C	D	E	F	MAXIMUM THICKNESS	PACKAGE
CG-14H	140.0	114.5	1.9	8.0	7.0	ø4.4	1.5	100

返回图片索引

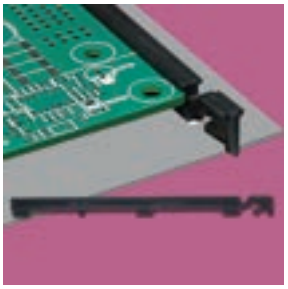

印刷电路板导槽 PCB GUIDE RAIL 11-13-1

- MATERIAL: NYLON 66(UL)
- FLAME CLASS: 94V-0/94V-2
- COLOR: BLACK
- NO EXTRA SCREW NEEDED

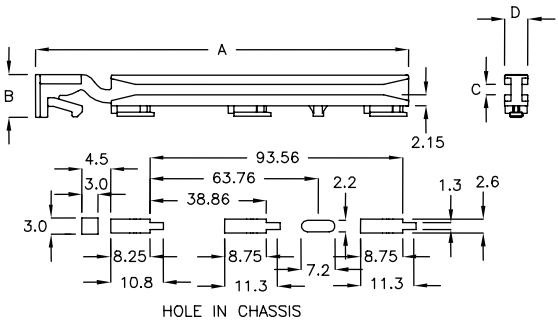

PART NO	A	B	C	D	MAXIMUM THICKNESS	PACKAGE
CGL–116JS	116.9	8.0	2.0	4.5	0.8	100

印刷电路板导槽 PCB GUIDE RAIL 11-13-2

- MATERIAL: PC(UL)
- FLAME CLASS: 94V-2
- COLOR: BLACK
- NO EXTRA SCREW NEEDED

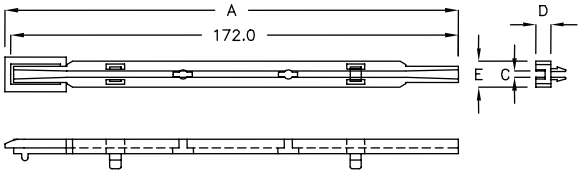

PART NO	A	B	C	D	E	MAXIMUM THICKNESS	PACKAGE
CG–17A	175.0	102.0	2.2	5.0	9.0	1.6	100

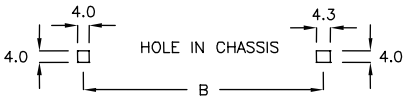

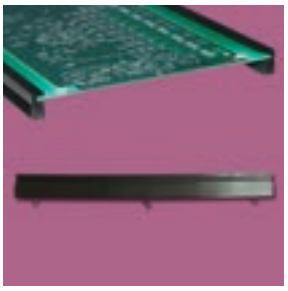

印刷电路板导槽 PCB GUIDE RAIL 11-13-3

- MATERIAL: NYLON 66(UL)
- FLAME CLASS: 94V-0/94V-2
- COLOR: BLACK
- NO EXTRA SCREW NEEDED

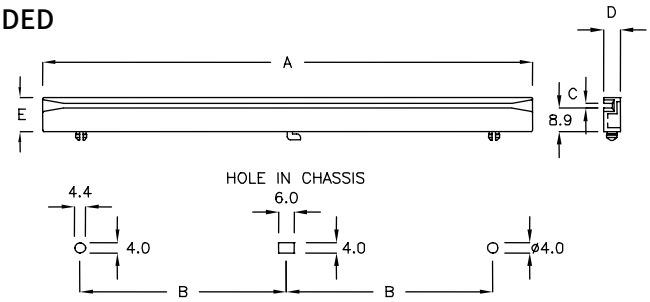

PART NO	A	B	C	D	E	MAXIMUM THICKNESS	PACKAGE
CG–19C	190.0	80.0	2.0	6.4	13.1	1.1	100

印刷电路板导槽 PCB GUIDE RAIL 11-13-4

- MATERIAL: NYLON 66(UL)
- FLAME CLASS: 94V-0/94V-2
- COLOR: BLACK

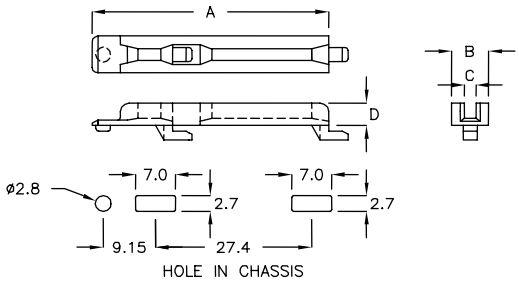

PART NO	A	B	C	D	CHASSIS THICKNESS	PACKAGE
CG–04FN	41.5	6.5	2.0	4.0	0.8	200

返回图片索引

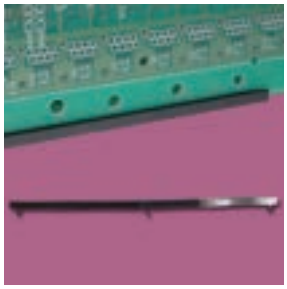

印刷电路板导槽 PCB GUIDE RAIL 11-14-1

- MATERIAL: NYLON 66(UL)
- FLAME CLASS: 94V-0/94V-2
- COLOR: BLACK
- NO EXTRA SCREW NEEDED

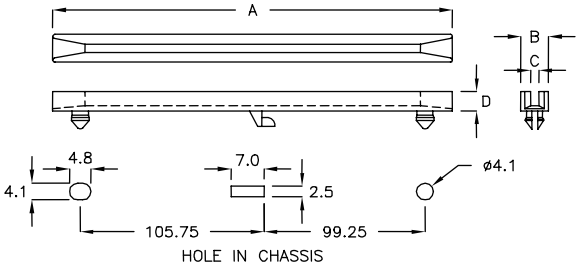

PART NO	A	B	C	D	MAXIMUM THICKNESS	PACKAGE
CG-21C	218.0	6.6	1.85	4.7	1.5	100

印刷电路板导槽 PCB GUIDE RAIL 11-14-2

- MATERIAL: NYLON 66(UL)
- FLAME CLASS: 94V-0/94V-2
- COLOR: NATURAL

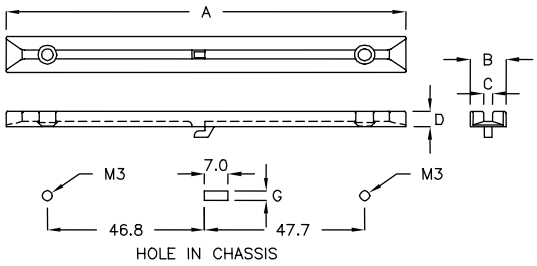

PART NO	A	B	C	D	G	MAXIMUM THICKNESS	PACKAGE
CG-12AT	119.0	10.8	2.6	4.5	2.1	1.0	100
CG-12BG	119.0	10.8	3.2	4.5	2.7	1.0	

印刷电路板导槽 PCB GUIDE RAIL 11-14-3

- MATERIAL: NYLON 66(UL)
- FLAME CLASS: 94V-0/94V-2
- COLOR: BLACK

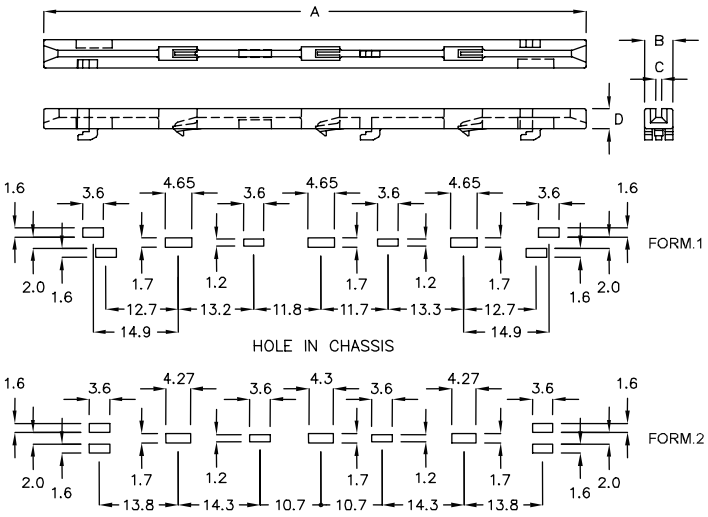

PART NO	A	B	C	D	CHASSIS THICKNESS	FORM	PACKAGE
CGJ-95RY	95.0	5.0	1.1	3.5	0.5	1	100
					0.8~1.0	2	

返回图片索引

印刷电路板导槽 PCB GUIDE RAIL 11-15-1

- MATERIAL: NYLON 66(UL)
- FLAME CLASS: 94V-0/94V-2
- COLOR: BLACK
- NO EXTRA SCREW NEEDED

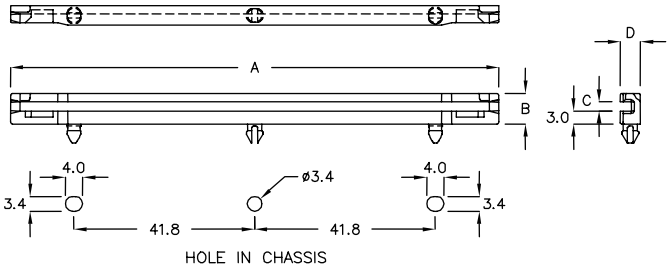

PART NO	A	B	C	D	MAXIMUM THICKNESS	PACKAGE
CGT-113F	113.0	7.1	2.1	4.6	1.6	100

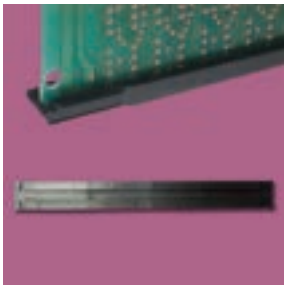

印刷电路板导槽 PCB GUIDE RAIL 11-15-2

- MATERIAL: PC(UL)
- FLAME CLASS: 94V-2
- COLOR: BLACK
- NO EXTRA SCREW NEEDED

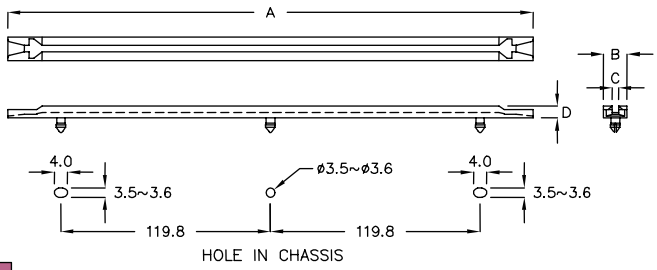

PART NO	A	B	C	D	MAXIMUM THICKNESS	PACKAGE
CG-28A	280.0	9.0	2.35	4.5	1.7	100

印刷电路板导槽 PCB GUIDE RAIL 11-15-3

- MATERIAL: NYLON 66(UL)
- FLAME CLASS: 94V-0/94V-2
- COLOR: BLACK

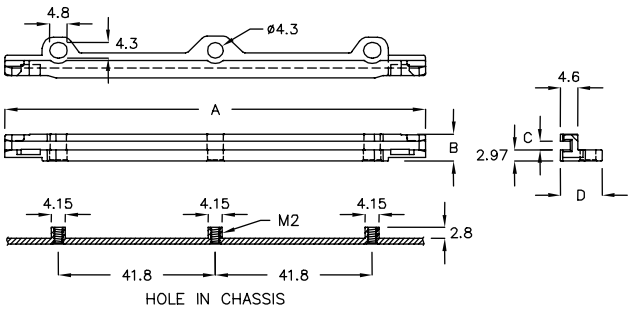

PART NO	A	B	C	D	PACKAGE
CGW-112A	112.0	7.16	2.25	11.1	100

返回图片索引

印刷电路板导槽 PCB GUIDE RAIL 11-16-1

- MATERIAL: ABS+PC(UL)
- FLAME CLASS: 94V-0
- COLOR: BLACK
- USE M2 SCREW

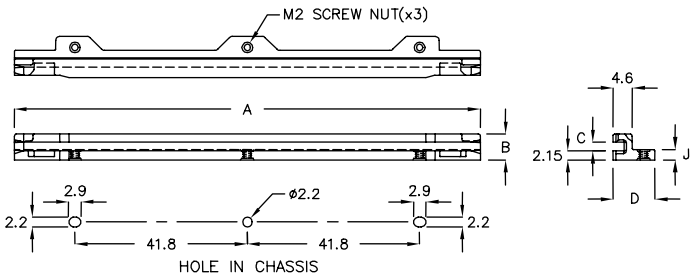

PART NO	A	B	C	D	J	PACKAGE
CGZ-113AT	113.0	6.25	2.1	10.1	2.0	100
CGZ-113K	113.0	6.25	2.1	10.1	2.5	

印刷电路板导槽 PCB GUIDE RAIL 11-16-2

- MATERIAL: ABS+PC(UL)
- FLAME CLASS: 94V-0
- COLOR: BLACK
- USE M2 SCREW

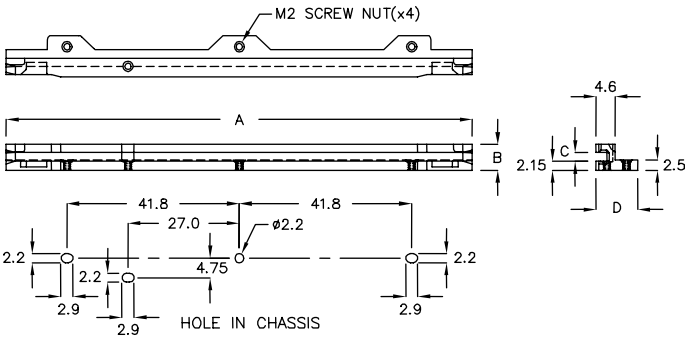

PART NO	A	B	C	D	PACKAGE
CGZ-113NR	113.0	6.25	2.1	10.1	100

印刷电路板导槽 PCB GUIDE RAIL 11-16-3

- MATERIAL: ABS+PC(UL)
- FLAME CLASS: 94V-0
- COLOR: BLACK
- USE M2 SCREW

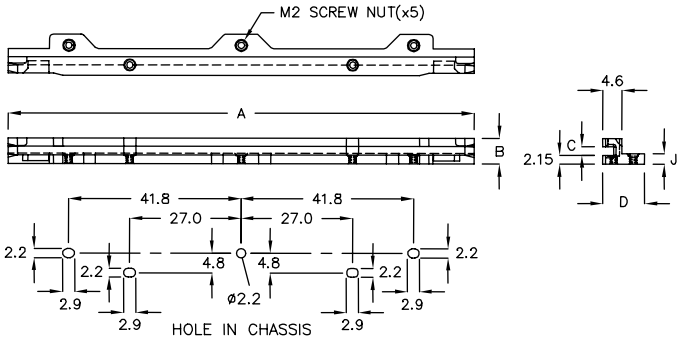

PART NO	A	B	C	D	J	PACKAGE
CGZ-113TY	113.0	6.25	2.1	10.1	2.0	100
CGZ-113FL	113.0	6.25	2.1	10.1	2.5	

返回图片索引

印刷电路板导槽 PCB GUIDE RAIL 11-17-1

- MATERIAL: ABS+PC(UL)
- FLAME CLASS: 94V-0
- COLOR: BLACK
- USE M2 SCREW

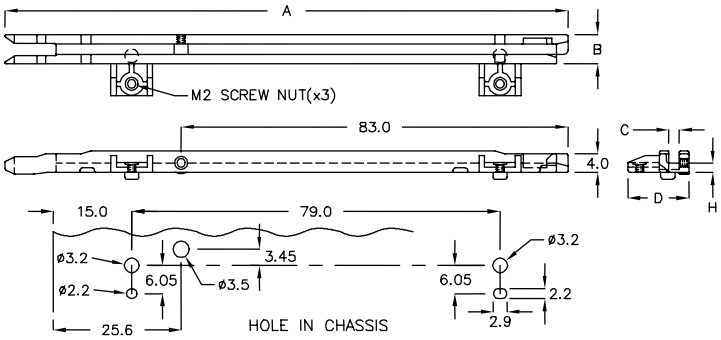

	PART NO	A	B	C	D	H	PACKAGE
	CGZA-120L	120.7	6.25	2.2	13.05	2.0	100
★	CGZA-126L	126.3	6.25	2.2	13.05	2.0	

印刷电路板导槽 PCB GUIDE RAIL 11-17-2

- MATERIAL: ABS+PC(UL)
- FLAME CLASS: 94V-0
- COLOR: BLACK
- USE M2 SCREW

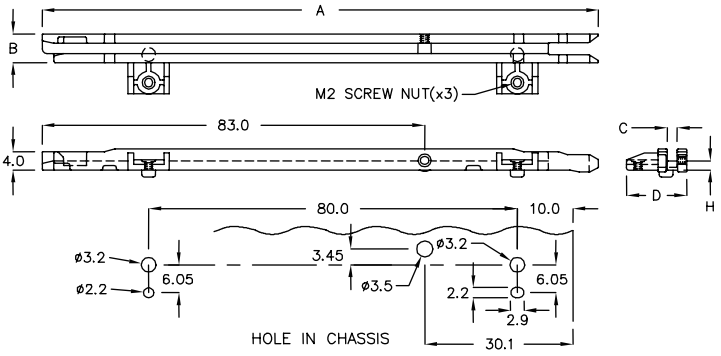

	PART NO	A	B	C	D	H	PACKAGE
	CGZA-120R	120.7	6.25	2.2	13.05	2.0	100
★	CGZA-126R	126.3	6.25	2.2	13.05	2.0	

印刷电路板导槽 PCB GUIDE RAIL 11-17-3

- MATERIAL: NYLON 66(UL)
- FLAME CLASS: 94V-0/94V-2
- COLOR: BLACK
- NO EXTRA SCREW NEEDED

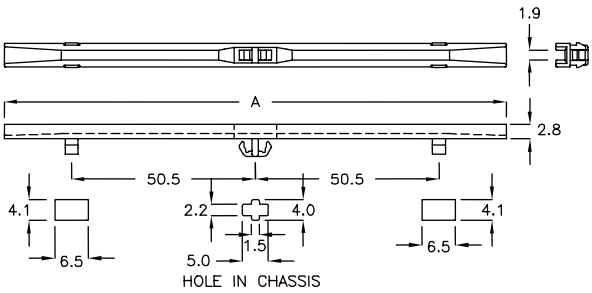

PART NO	A	MAXIMUM THICKNESS	PACKAGE
CGB-127	127.0	1.0	100

返回图片索引

印刷电路板导槽 PCB GUIDE RAIL 11-18-1

- MATERIAL: NYLON 66(UL)
- FLAME CLASS: 94V-0/94V-2
- COLOR: NATURAL

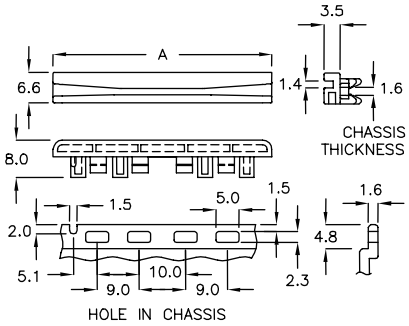

PART NO	A	PACKAGE
CGM-47	47.0	200

印刷电路板导槽 PCB GUIDE RAIL 11-18-2

- MATERIAL: NYLON 66(UL)
- FLAME CLASS: 94V-0/94V-2
- COLOR: NATURAL

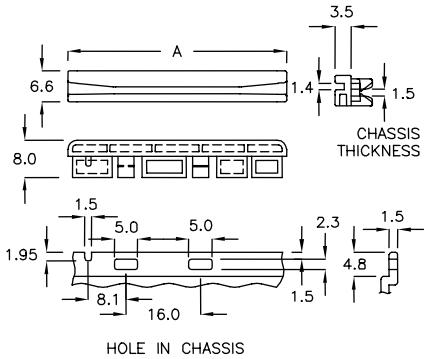

PART NO	A	PACKAGE
CGM-47SJ	47.0	200

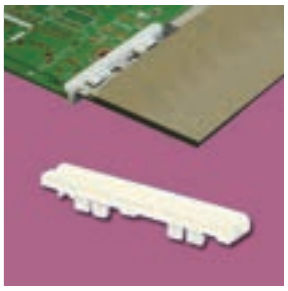

印刷电路板导槽 PCB GUIDE RAIL 11-18-3

- MATERIAL: NYLON 66(UL)
- FLAME CLASS: 94V-0/94V-2
- COLOR: NATURAL

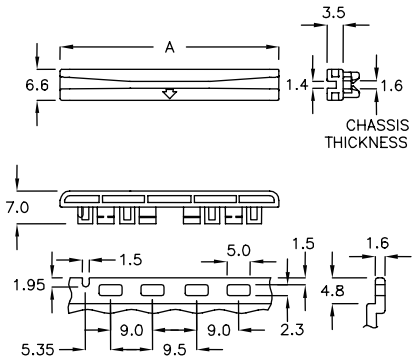

PART NO	A	PACKAGE
CGM-47YK	47.0	200

印刷电路板导槽 PCB GUIDE RAIL 11-18-4

- MATERIAL: NYLON 66(UL)
- FLAME CLASS: 94V-0/94V-2
- COLOR: NATURAL

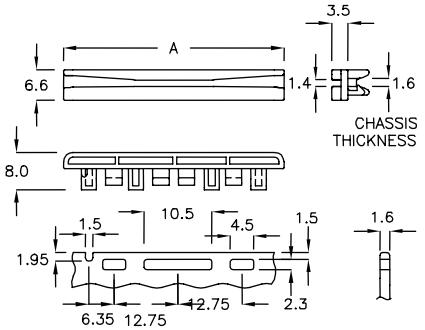

PART NO	A	PACKAGE
CGM-47DK	47.0	200

返回图片索引

印刷电路板导槽 PCB GUIDE RAIL 11-19-1

- MATERIAL: NYLON 66(UL)
- FLAME CLASS: 94V-0/94V-2
- COLOR: NATURAL

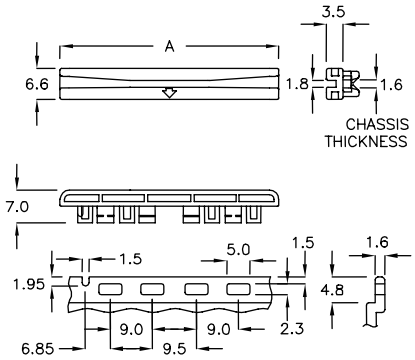

PART NO	A	PACKAGE
CGM-50RT	50.0	200

印刷电路板导槽 PCB GUIDE RAIL 11-19-2

- MATERIAL: NYLON 66(UL)
- FLAME CLASS: 94V-0/94V-2
- COLOR: NATURAL

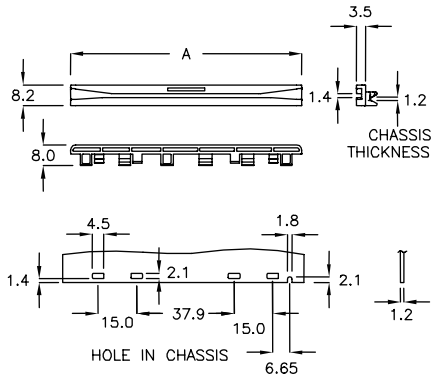

PART NO	A	PACKAGE
CGM-90	90.0	200

印刷电路板导槽 PCB GUIDE RAIL 11-19-3

- MATERIAL: NYLON 66(UL)
- FLAME CLASS: 94V-0/94V-2
- COLOR: NATURAL

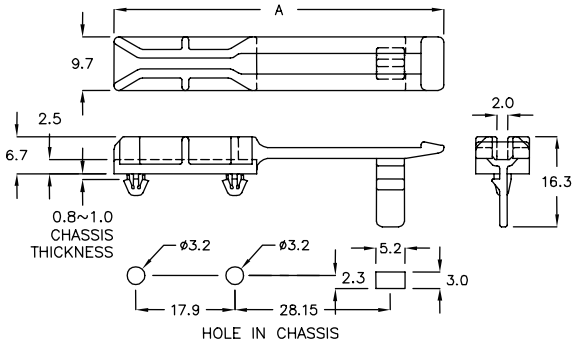

PART NO	A	PACKAGE
CGH-60PL	59.7	200

直立式导槽 PCB GUIDE RAIL 11-19-4

- MATERIAL: NYLON 66(UL)
- FLAME CLASS: 94V-0/94V-2
- COLOR: NATURAL
- NO EXTRA SCREW NEEDED

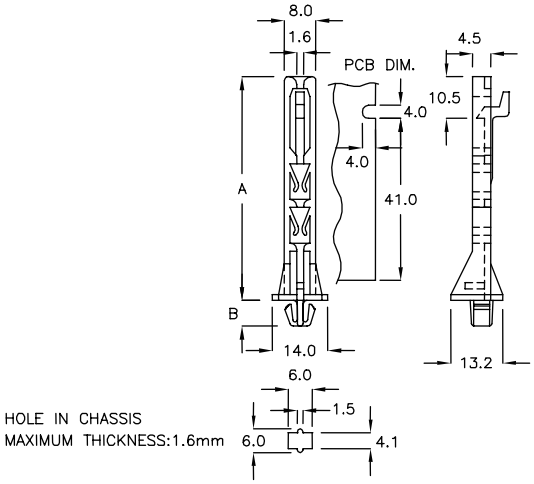

PART NO	A	B	PACKAGE
HCG-5	56.5	6.5	200

返回图片索引

直立式导槽 PCB GUIDE RAIL 11-20-1

- MATERIAL: NYLON 66(UL)
- FLAME CLASS: 94V-0/94V-2
- COLOR: WHITE

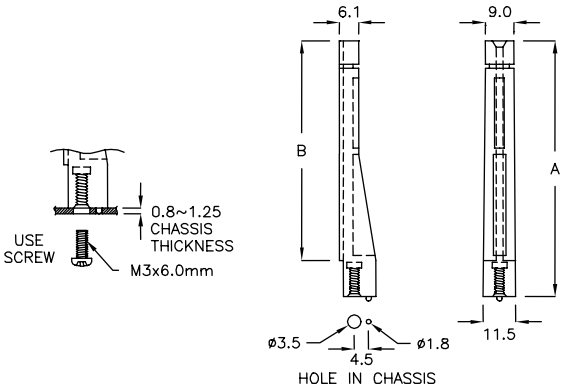

PART NO	A	B	PACKAGE
HCG-9	89.2	77.2	50
HCG-13	130.0	118.5	

直立式导槽 PCB GUIDE RAIL 11-20-2

- MATERIAL: NYLON 66(UL)
- FLAME CLASS: 94V-0/94V-2
- COLOR: BLACK
- USE M3x8 TAPPING SCREW

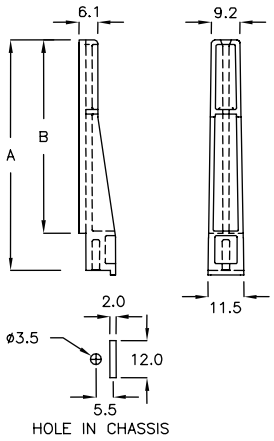

PART NO	A	B	PACKAGE
HCG-74A	74.2	62.2	200

直立式导槽 PCB GUIDE RAIL 11-20-3

- MATERIAL: NYLON 66(UL)
- FLAME CLASS: 94V-0/94V-2
- COLOR: BLACK
- USE M3x10 TAPPING SCREW

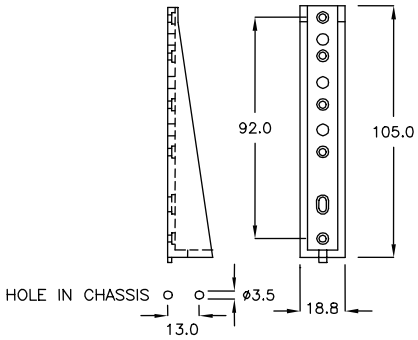

PART NO	A	B	PACKAGE
HCG-10	105.0	92.0	200

ASSEMBLE WITH P.G PART CG-10B
(Page 11-4-1)

直立式导槽 PCB GUIDE RAIL 11-20-4

- MATERIAL: NYLON 66(UL)
- FLAME CLASS: 94V-0/94V-2
- COLOR: NATURAL

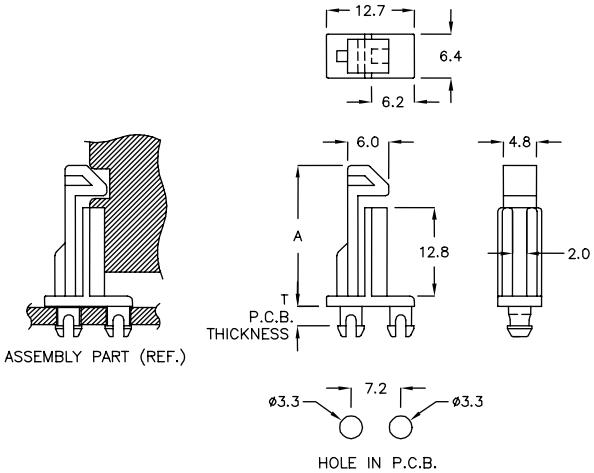

PART NO	A	T P.C.B. THICKNESS	PACKAGE
HCGT-20A	8.0	2.7	200

12

束线带
CABLE TIES

电线束线带 CABLE TIE 12-2-1

- MATERIAL: NYLON 66(UL)
- FLAME CLASS: 94V-0/94V-2
- COLOR: NATURAL

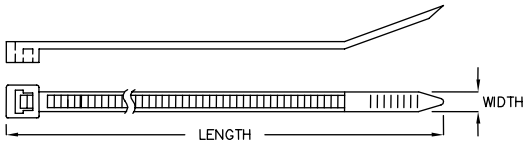

SUGGEST: MIN BUNDLE DIA ø5.0

E101675

PART NO	APPROX LENGTH mm(in)	APPROX WIDTH mm(in)	MAX BUNDLE DIA mm(in)	MIN. LOOP TENSILE STRENGTH kgs(Lbs)	PACKAGE
YJ-80	80(3.15")	2.2(0.08")	17(0.67")	8(18)	1000
YJ-90	90(3.54")	2.5(0.10")	21(0.83")		
YJ-98	98(3.86")		22(0.87")		
YJ-100	100(4.00")		23(0.91")		
YJ-115	115(4.53")	4.8(0.19")	29(1.15")	23(50)	500
YJ-120	120(4.72")	2.5(0.10")	30(1.18")	8(18)	1000
YJ-140	140(5.50")	4.8(0.19")	34(1.34")	23(50)	500
YJ-142	142(5.59")	3.6(0.14")		18(40)	
YJ-142S	142(5.59")	2.5(0.10")	36(1.42")	8(18)	1000
YJ-160	160(6.30")		42(1.66")		
YJ-203	203(8.00")	3.6(0.14")	55(2.17")	18(40)	500
YJ-203S	203(8.00")	2.5(0.10")	56(2.21")	8(18)	1000

电线束线带 SCREW-ON CABLE TIE 12-2-2

- MATERIAL: NYLON 66(UL)
- FLAME CLASS: 94V-0/94V-2
- COLOR: NATURAL

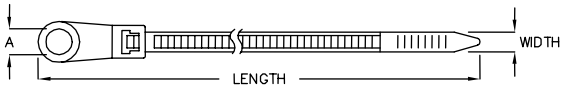

SUGGEST: MIN BUNDLE DIA ø10.0

PART NO	APPROX LENGTH mm(in)	APPROX WIDTH mm(in)	MAX BUNDLE DIA mm(in)	A	PACKAGE
YJ-156	156(6.14")	3.6(0.14")	34(1.33")	ø4.3	500
YJ-205	205(8.00")	4.8(0.19")	51(2.01")	ø5.5	

把手座 HANDLE MOUNTING PLATE 12-2-3

- MATERIAL: PE
- COLOR: BLACK

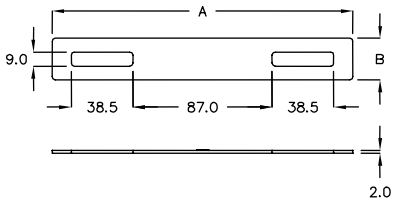

PART NO	A	B	PACKAGE
BSTH-188F	188.0	26.0	100

CAN BE USED AN OPTION P.G PART BST-07 (Page 12-2-4)

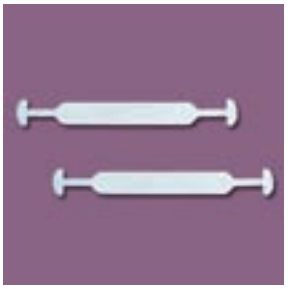

纸箱把手 PULLER 12-2-4

- MATERIAL: PE
- COLOR: WHITE

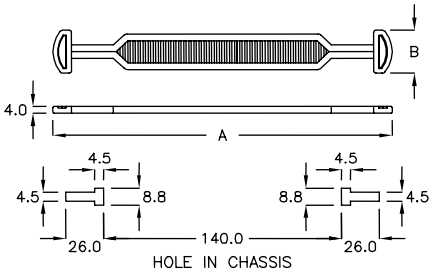

PART NO	A	B	PACKAGE
BST-07	198.0	25.4	200

CAN BE USED AN OPTION P.G PART BSTH-188F (Page 12-2-3)

把手 PULLER 12-3-1

- MATERIAL: NYLON 66(UL)
- FLAME CLASS: 94V-0/94V-2
- COLOR: NATURAL

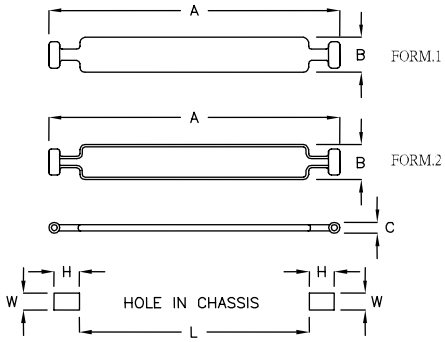

PART NO	A	B	C	H	W	L	FORM	PACKAGE
BST−60A	60.6	9.4	ø2.3	8.0	3.7	30.0	1	1000
BST−70	70.0	8.0	ø2.0	7.0	4.0	46.0	1	500
BST−8D	79.8	9.4	ø2.3	15.0	3.7	46.0	1	
BST−9A	90.5	9.4	ø2.3	7.0	3.8	60.5	2	
BST−120	120.0	11.9	ø2.3	9.2	6.0	80.0	2	

把手 PULLER 12-3-2

- MATERIAL: NYLON 66(UL)
- FLAME CLASS: 94V-0/94V-2
- COLOR: BLACK

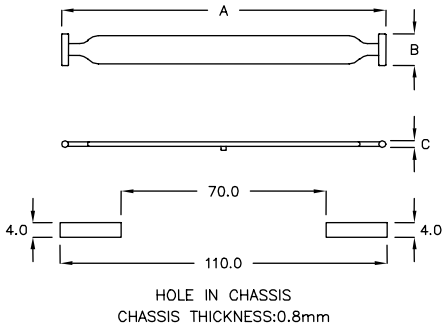

PART NO	A	B	C	PACKAGE
BSX−110K	110.6	9.0	ø2.0	500

把手 PULLER 12-3-3

- MATERIAL: NYLON 66(UL)
- FLAME CLASS: 94V-0/94V-2
- COLOR: NATURAL

PART NO	A	PACKAGE
BST−180Q	180.0	200

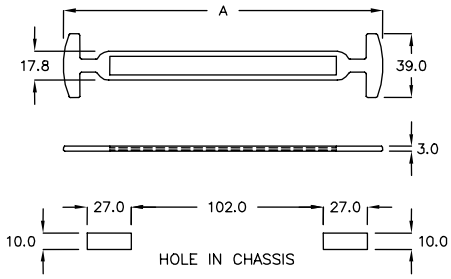

固定座 MOUNTING 12-3-4

- MATERIAL: NYLON 66(UL)
- FLAME CLASS: 94V-0/94V-2
- COLOR: BLACK
- USE M4 SCREW

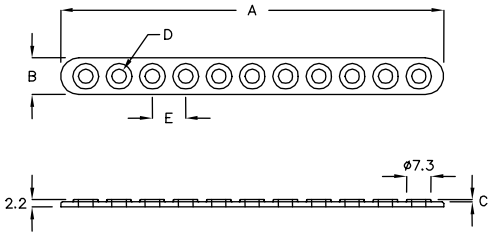

PART NO	A	B	C	D	E	PACKAGE
BSW−115	115.0	11.0	0.7	ø4.3×11	10.0×10	500
BSW−155	155.0	11.0	0.7	ø4.3×15	10.0×14	

返回图片索引

固定座 MOUNTING 12-4-1

- MATERIAL: NYLON 66(UL)
- FLAME CLASS: 94V-0/94V-2
- COLOR: BLACK
- USE M4 SCREW

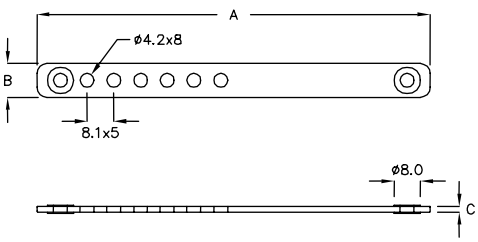

PART NO	A	B	C	PACKAGE
BSW-119	118.8	10.2	1.7	500

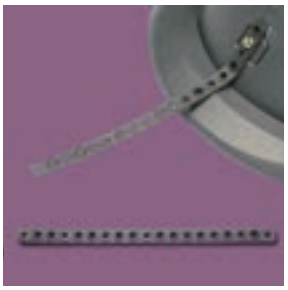

固定座 MOUNTING 12-4-2

- MATERIAL: NYLON 66(UL)
- FLAME CLASS: 94V-0/94V-2
- COLOR: BLACK
- USE M4 SCREW

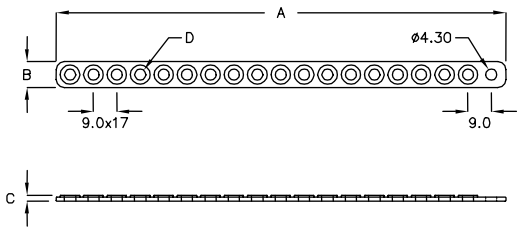

PART NO	A	B	C	D	PACKAGE
BSW-172	172.7	10.0	2.2	ø4.3x18	500

束线带固定座 MOUNTING 12-4-3

- MATERIAL: NYLON 66(UL)
- FLAME CLASS: 94V-0/94V-2
- COLOR: BLACK

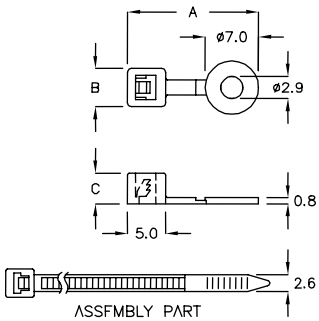

PART NO	A	B	C	ASSEMBLE WITH P.G. PART	PACKAGE
YAD-01	17.2	5.0	4.0	YJ-80, YJ-90, YJ-98 YJ-100, YJ-120, YJ-142S YJ-160, YJ-203S	2000

ASSEMBLE WITH P.G PART YJ-SERIES (Page 12-2-1)
MUST BE ASSEMBLED WITH CABLE TIE, WIDTH UP TO 2.6mm

电源线固定带 CABLE TIE 12-4-4

- MATERIAL: NYLON 66(UL)
- FLAME CLASS: 94V-0/94V-2
- COLOR: BLACK

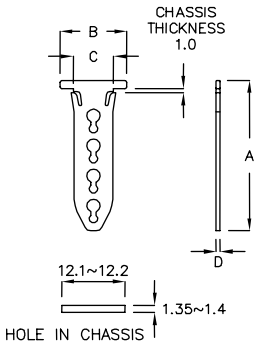

PART NO	A	B	C	D	PACKAGE
PSA-01	45.0	20.0	11.9	1.2	500

ASSEMBLE WITH P.G PART PSA-02 (Page 12-5-1)

电源线固定带 CABLE TIE 12-5-1

- MATERIAL: NYLON 66(UL)
- FLAME CLASS: 94V-0/94V-2
- COLOR: BLACK

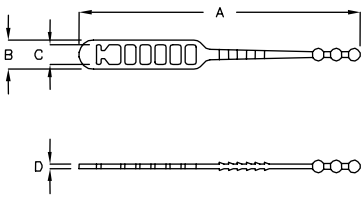

PART NO	A	B	C	D	PACKAGE
PSA-02	78.25	8.0	5.6	1.2	500

ASSEMBLE WITH P.G PART PSA-01 (Page 12-4-4)

电源线固定带 CABLE TIE 12-5-2

- MATERIAL: NYLON 66(UL)
- FLAME CLASS: 94V-0/94V-2
- COLOR: BLACK

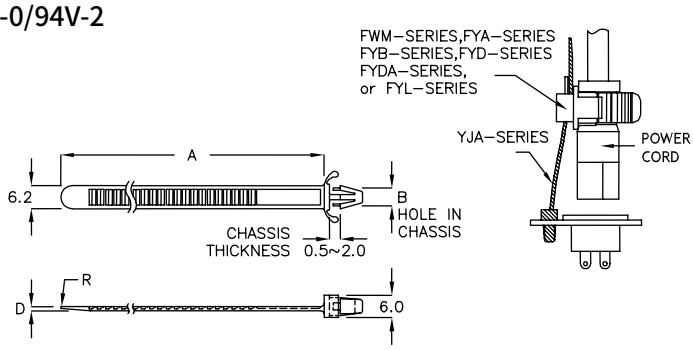

PART NO	A	B HOLE IN CHASSIS	D	R	ASSEMBLE WITH P.G. PART	PACKAGE
YJA-85	85.0	ø5.0	1.2	R0.1	FWM-7GQ, FWM-8K FWM-11A, FWM-11KN FWM-15A, FWM-19M FYA-15KC, FYA-15TR FYB-15NK, FYD-13K FYDA-13C, FYL-17C	100
YJA-85KT	85.0	ø5.0	1.2	R0.4		
YJA-85PD	85.0	ø5.0	1.5	R0.1	FWM-11PH, FWM-15PD	

ASSEMBLE WITH P.G PART FWM-SERIES, FYA-SERIES, FYB-SERIES, FYD-SERIES, FYDA-SERIES or FYL-SERIES (Page 12-12-2, 12-13-1~2, 12-14-1, 12-14-2)

电源线固定带 CABLE TIE 12-5-3

- MATERIAL: NYLON 66(UL)
- FLAME CLASS: 94V-0/94V-2
- COLOR: BLACK

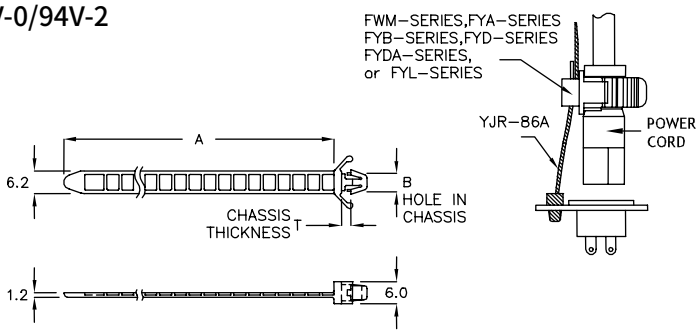

PART NO	A	B HOLE IN CHASSIS	T CHASSIS THICKNESS	ASSEMBLE WITH P.G. PART	PACKAGE
YJR-86A	86.75	ø5.0	0.8~2.0	FWM-7GQ, FWM-8K FWM-11A, FWM-11KN FWM-15A, FWM-19M FYA-15KC, FYA-15TR FYB-15NK, FYD-13K FYDA-13C, FYL-17C	100

ASSEMBLE WITH P.G PART FWM-SERIES, FYA-SERIES, FYB-SERIES, FYD-SERIES, FYDA-SERIES or FYL-SERIES (Page 12-12-2, 12-13-1, 12-13-2, 12-14-1, 12-14-2)

返回图片索引

电源线固定带 CABLE TIE 12-6-1

- MATERIAL: NYLON 66(UL)
- FLAME CLASS: 94V-0/94V-2
- COLOR: BLACK

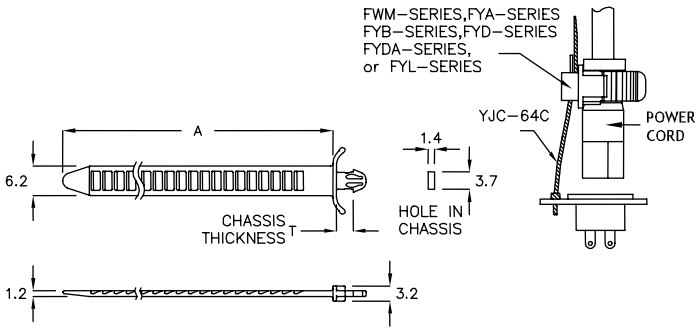

PART NO	A	T CHASSIS THICKNESS	ASSEMBLE WITH P.G. PART	PACKAGE
YJC–64C	64.2	1.8~2.8	FWM–7GQ, FWM–8K FWM–11A, FWM–11KN FWM–15A, FWM–19M FYA–15KC, FYA–15TR FYB–15NK, FYD–13K FYDA–13C, FYL–17C	500

ASSEMBLE WITH P.G PART FWM–SERIES, FYA–SERIES, FYB–SERIES, FYD–SERIES, FYDA–SERIES or FYL–SERIES(Page 12–12–2, 12–13–1~2, 12–14–1, 12–14–2)

电源线固定带 CABLE TIE 12-6-2

- MATERIAL: NYLON 66(UL)
- FLAME CLASS: 94V-0/94V-2
- COLOR: BLACK

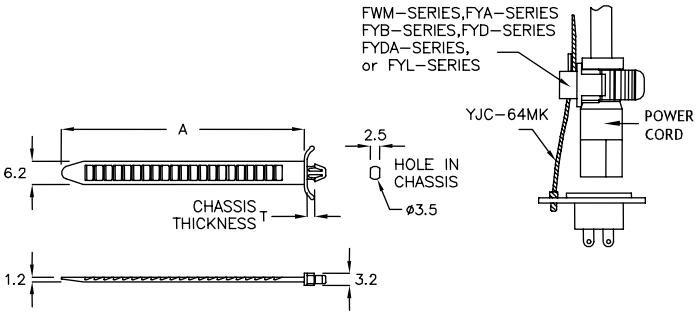

PART NO	A	T CHASSIS THICKNESS	ASSEMBLE WITH P.G. PART	PACKAGE
YJC–64MK	64.2	1.0~1.4	FWM–7GQ, FWM–8K FWM–11A, FWM–11KN FWM–15A, FWM–19M FYA–15KC, FYA–15TR FYB–15NK, FYD–13K FYDA–13C, FYL–17C	500

ASSEMBLE WITH P.G PART FWM–SERIES, FYA–SERIES, FYB–SERIES, FYD–SERIES, FYDA–SERIES or FYL–SERIES (Page 12–12–2, 12–13–1~2, 12–14–1, 12–14–2)

电源线固定带 CABLE TIE 12-7-1

- MATERIAL: NYLON 66(UL)
- FLAME CLASS: 94V-0/94V-2
- COLOR: BLACK

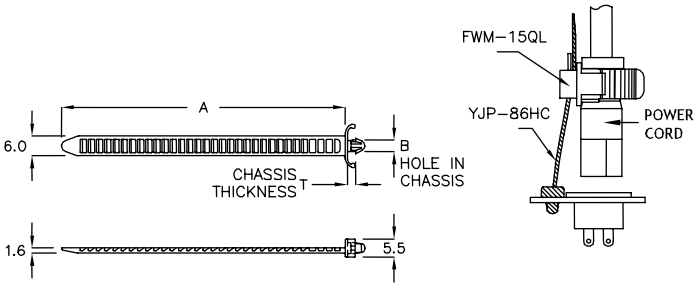

PART NO	A	B HOLE IN CHASSIS	T CHASSIS THICKNESS	ASSEMBLE WITH P.G. PART	PACKAGE
YJP-86HC	86.74	ø3.5	0.8~2.0	FWM-15QL	100

ASSEMBLE WITH P.G PART FWM-15QL (Page 12-13-2)

电源线固定带 CABLE TIE 12-7-2

- MATERIAL: NYLON 66(UL)
- FLAME CLASS: 94V-0/94V-2
- COLOR: BLACK

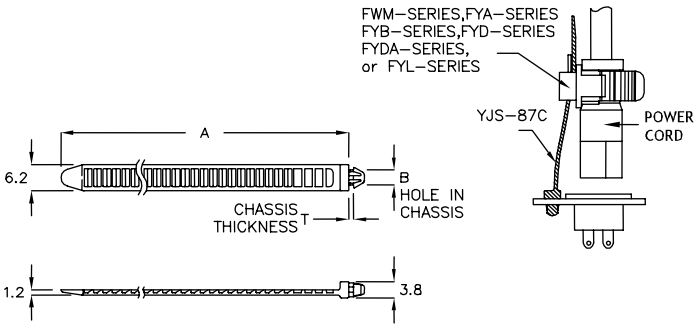

PART NO	A	B HOLE IN CHASSIS	T CHASSIS THICKNESS	ASSEMBLE WITH P.G. PART	PACKAGE
YJS-87C	89.0	ø3.5	0.8	FWM-7GQ, FWM-8K FWM-11A, FWM-11KN FWM-15A, FWM-19M FYA-15KC, FYA-15TR FYB-15NK, FYD-13K FYDA-13C, FYL-17C	100

ASSEMBLE WITH P.G PART FWM-SERIES, FYA-SERIES, FYB-SERIES, FYD-SERIES, FYDA-SERIES or FYL-SERIES (Page 12-12-2, 12-13-1~2, 12-14-1, 12-14-2)

电源线固定带 CABLE TIE 12-8-1

- MATERIAL: NYLON 66(UL)
- FLAME CLASS: 94V-0/94V-2
- COLOR: BLACK

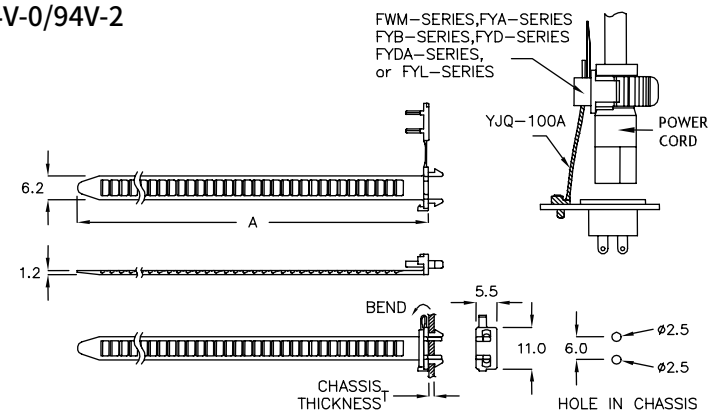

PART NO	A	T CHASSIS THICKNESS	ASSEMBLE WITH P.G. PART	PACKAGE
YJQ–100A	100.0	1.6	FWM–7GQ, FWM–8K FWM–11A, FWM–11KN FWM–15A, FWM–19M FYA–15KC, FYA–15TR FYB–15NK, FYD–13K FYDA–13C, FYL–17C	100

ASSEMBLE WITH P.G PART FWM–SERIES, FYA–SERIES, FYB–SERIES, FYD–SERIES, FYDA–SERIES or FYL–SERIES (Page 12–12–2, 12–13–1~2, 12–14–1, 12–14–2)

电源线固定带 CABLE TIE 12-8-2

- MATERIAL: NYLON 66(UL)
- FLAME CLASS: 94V-0/94V-2
- COLOR: BLACK

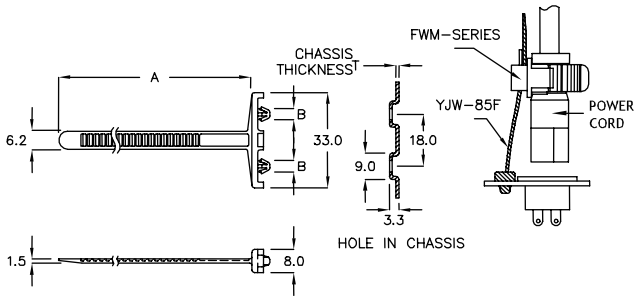

PART NO	A	B HOLE IN CHASSIS	T CHASSIS THICKNESS	ASSEMBLE WITH P.G. PART	PACKAGE
YJW–85F	85.0	ø4.0	1.0	FWM–11PH, FWM–15PD	100

ASSEMBLE WITH P.G PART FWM–SERIES (Page 12–12–2)

电源线固定带 CABLE TIE 12-8-3

- MATERIAL: NYLON 66(UL)
- FLAME CLASS: 94V-0/94V-2
- COLOR: BLACK

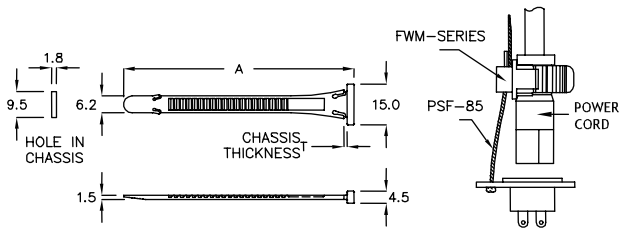

PART NO	A	T CHASSIS THICKNESS	ASSEMBLE WITH P.G. PART	PACKAGE
PSF–85	85.0	0.8	FWM–11PH, FWM–15PD	500

ASSEMBLE WITH P.G PART FWM–SERIES (Page 12–12–2)

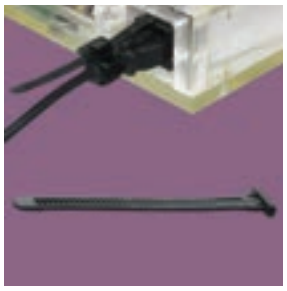

电源线固定带 CABLE TIE 12-9-1

- MATERIAL: NYLON 66(UL)
- FLAME CLASS: 94V-0/94V-2
- COLOR: BLACK

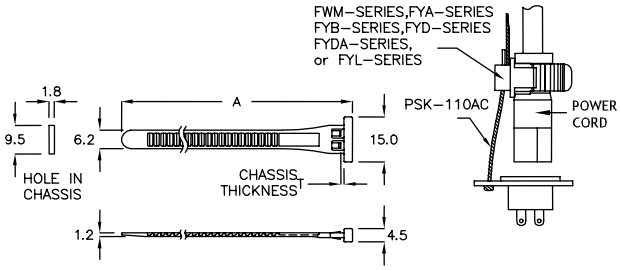

PART NO	A	T CHASSIS THICKNESS	ASSEMBLE WITH P.G. PART	PACKAGE
PSK–110AC	110.0	0.8	FWM–7GQ, FWM–8K FWM–11A, FWM–11KN FWM–15A, FWM–19M FYA–15KC, FYA–15TR FYB–15NK, FYD–13K FYDA–13C, FYL–17C	500

ASSEMBLE WITH P.G PART FWM–SERIES, FYA–SERIES, FYB–SERIES, FYD–SERIES, FYDA–SERIES or FYL–SERIES (Page 12–12–2, 12–13–1~2, 12–14–1, 12–14–2)

电源线固定带 CABLE TIE 12-9-2

- MATERIAL: NYLON 66(UL)
- FLAME CLASS: 94V-0/94V-2
- COLOR: BLACK

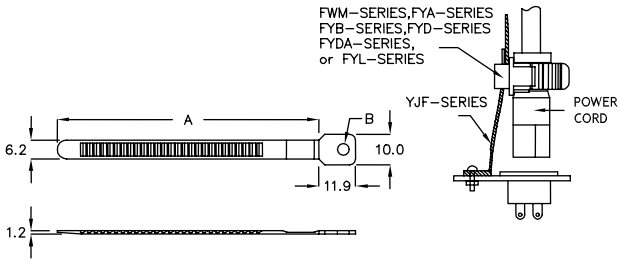

PART NO	A	B	ASSEMBLE WITH P.G. PART	PACKAGE
YJF–94	85.0	ø3.8	FWM–7GQ, FWM–8K FWM–11A, FWM–11KN FWM–15A, FWM–19M FYA–15KC, FYA–15TR FYB–15NK, FYD–13K FYDA–13C, FYL–17C	100
YJF–116KH	105.0	ø6.0		

ASSEMBLE WITH P.G PART FWM–SERIES, FYA–SERIES, FYB–SERIES, FYD–SERIES, FYDA–SERIES or FYL–SERIES (Page 12–12–2, 12–13–1~2, 12–14–1, 12–14–2)

返回图片索引

电源线固定带 CABLE TIE 12-10-1

- MATERIAL: NYLON 66(UL)
- FLAME CLASS: 94V-0/94V-2
- COLOR: BLACK

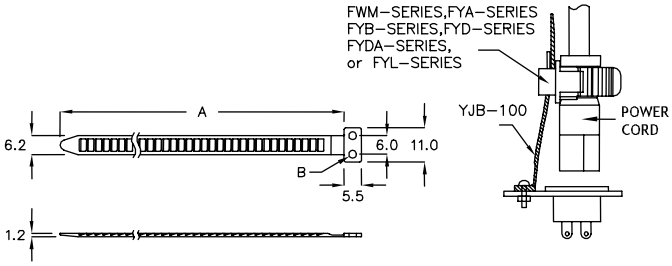

PART NO	A	B	ASSEMBLE WITH P.G. PART	PACKAGE
YJB–100	100.0	ø2.5	FWM–7GQ, FWM–8K FWM–11A, FWM–11KN FWM–15A, FWM–19M FYA–15KC, FYA–15TR FYB–15NK, FYD–13K FYDA–13C, FYL–17C	100

ASSEMBLE WITH P.G PART FWM–SERIES, FYA–SERIES, FYB–SERIES,
FYD–SERIES, FYDA–SERIES or FYL–SERIES (Page 12–12–2, 12–13–1~2, 12–14–1, 12–14–2)

电源线固定带 CABLE TIE 12-10-2

- MATERIAL: NYLON 66(UL)
- FLAME CLASS: 94V-0/94V-2
- COLOR: BLACK

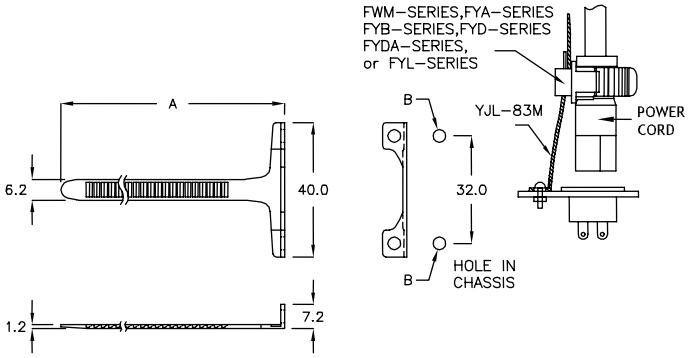

PART NO	A	B HOLE IN CHASSIS	ASSEMBLE WITH P.G. PART	PACKAGE
YJL–83M	83.5	ø3.5	FWM–7GQ, FWM–8K FWM–11A, FWM–11KN FWM–15A, FWM–19M FYA–15KC, FYA–15TR FYB–15NK, FYD–13K FYDA–13C, FYL–17C	100

ASSEMBLE WITH P.G PART FWM–SERIES, FYA–SERIES, FYB–SERIES,
FYD–SERIES, FYDA–SERIES or FYL–SERIES (Page 12–12–2, 12–13–1~2, 12–14–1, 12–14–2)

电源线固定带 CABLE TIE 12-11-1

- MATERIAL: NYLON 66(UL)
- FLAME CLASS: 94V-0/94V-2
- COLOR: BLACK

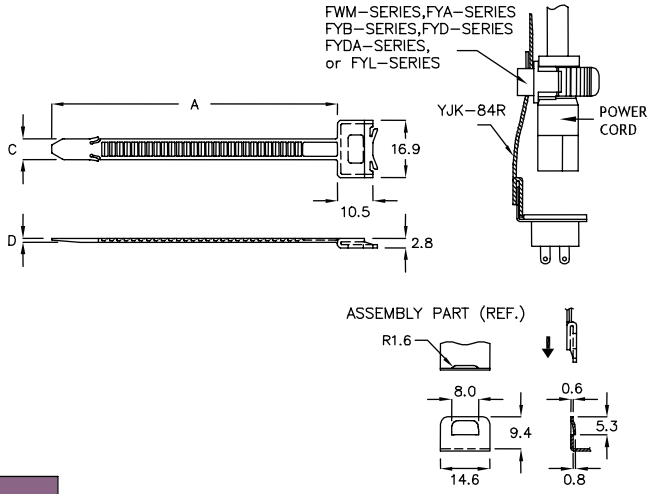

PART NO	A	C	D	ASSEMBLE WITH P.G. PART	PACKAGE
YJK–84R	84.6	6.2	1.2	FWM–7GQ, FWM–8K FWM–11A, FWM–11KN FWM–15A, FWM–19M FYA–15KC, FYA–15TR FYB–15NK, FYD–13K FYDA–13C, FYL–17C	100

ASSEMBLE WITH P.G PART FWM–SERIES, FYA–SERIES, FYB–SERIES, FYD–SERIES, FYDA–SERIES or FYL–SERIES (Page 12–12–2, 12–13–1~2, 12–14–1, 12–14–2)

电源线固定带 CABLE TIE 12-11-2

- MATERIAL: NYLON 66(UL)
- FLAME CLASS: 94V-0/94V-2
- COLOR: BLACK

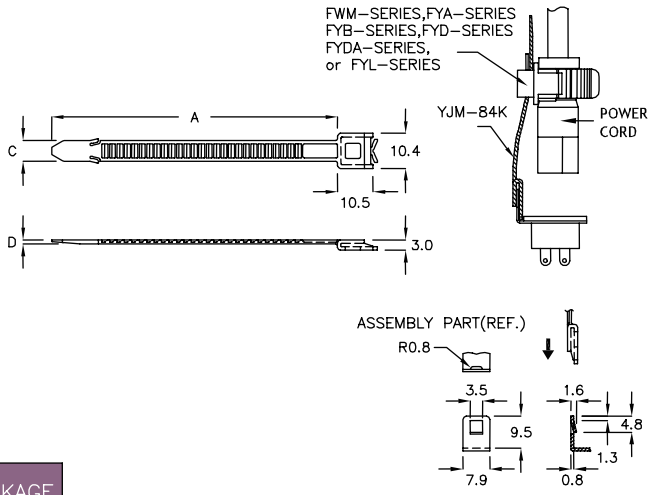

PART NO	A	C	D	ASSEMBLE WITH P.G. PART	PACKAGE
YJM–84K	84.6	6.2	1.2	FWM–7GQ, FWM–8K FWM–11A, FWM–11KN FWM–15A, FWM–19M FYA–15KC, FYA–15TR FYB–15NK, FYD–13K FYDA–13C, FYL–17C	100

ASSEMBLE WITH P.G PART FWM–SERIES, FYA–SERIES, FYB–SERIES, FYD–SERIES, FYDA–SERIES or FYL–SERIES (Page 12–12–2, 12–13–1~2, 12–14–1, 12–14–2)

返回图片索引

电源线固定带 CABLE TIE —— 12-12-1

- MATERIAL: NYLON 66(UL)
- FLAME CLASS: 94V-0/94V-2
- COLOR: BLACK

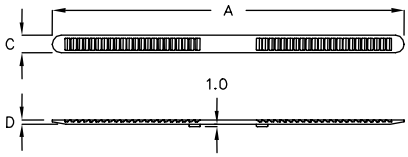

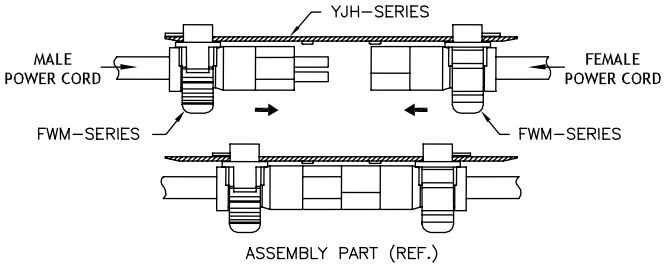

PART NO	A	C	D	ASSEMBLE WITH P.G. PART	PACKAGE
YJH–125	125.0	6.2	1.5	FWM–11PH, FWM–15PD FWM–26SA	100
YJH–180HG	180.0	6.2	1.5		

ASSEMBLE WITH P.G PART FWM–SERIES (Page 12–12–2, 12–14–1)

电源线固定座 POWER CORD MOUNTING —— 12-12-2

- MATERIAL: NYLON 66(UL)
- FLAME CLASS: 94V-0/94V-2
- COLOR: BLACK

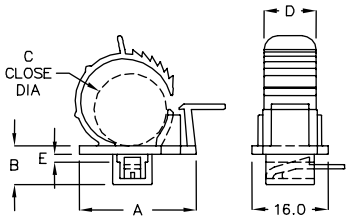

PART NO	A	B	C CLOSE DIA	D	E	R	ASSEMBLE WITH P.G. PART	PACKAGE
FWM–7GQ	18.0	8.1	ø5.0~ø6.5	11.0	1.3	R0.1	YJA–85, YJA–85KT YJB–100, YJC–64C YJC–64MK, YJF–94 YJF–116KH, YJK–84R YJL–83M, YJM–84K YJQ–100A, YJR–86A YJS–87C, PSK–110AC	100
FWM–8K	18.0	8.1	ø7.2~ø8.3					
FWM–11A	25.0	8.3	ø8.0~ø11.0					
FWM–11KN	25.0	8.3	ø8.0~ø11.0	11.0	1.3	R0.2		
FWM–15A	24.7	8.1	ø11.5~ø15.3	11.0	1.3	R0.1		
FWM–19M	28.3	8.3	ø15.3~ø19.0					
FWM–11PH	25.0	8.3	ø8.0~ø11.0	11.0	1.6	R0.1	YJA–85PD, YJH–125 YJH–180HG, YJW–85F PSF–85	
FWM–15PD	24.8	8.1	ø11.5~ø15.3					

ASSEMBLE WITH P.G PART YJA–SERIES, YJB–SERIES, YJC–SERIES, YJF–SERIES, YJH–SERIES, YJK–SERIES, YJL–SERIES, YJM–SERIES, YJQ–SERIES, YJR–SERIES, YJS–SERIES, YJW–SERIES or PSK–SERIES (Page 12–5–2, 12–5–3~12–6–1,12–6–2, 12–7–3~12–8–1,12–8–2~3, 12–9–1~2, 12–10–1~2, 12–11~2,12–12–1)

电源线固定座 POWER CORD MOUNTING——12-13-1

- MATERIAL: NYLON 66(UL)
- FLAME CLASS: 94V-0/94V-2
- COLOR: BLACK

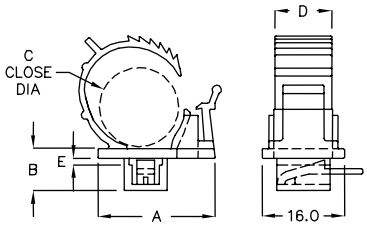

PART NO	A	B	C CLOSE DIA	D	E	ASSEMBLE WITH P.G. PART	PACKAGE
FYB-15NK	22.7	8.1	ø11.5~ø15.3	11.0	1.3	YJA-85, YJA-85KT, YJB-100 YJC-64C, YJC-64MK, YJF-94 YJF-116KH, YJK-84R, YJL-83M YJM-84K, YJQ-100A, YJR-86A YJS-87C, PSK-110AC	100

ASSEMBLE WITH P.G PART YJA-SERIES, YJB-SERIES, YJC-SERIES, YJF-SERIES, YJK-SERIES, YJL-SERIES, YJM-SERIES, YJQ-SERIES, YJR-SERIES, YJS-SERIES or PSK-SERIES
(Page 12-5-2, 12-5-3~12-6-1, 12-6-2, 12-7-3~12-8-1, 12-9-1~2, 12-10-1~2, 12-11-1~2)

电源线固定座 POWER CORD MOUNTING——12-13-2

- MATERIAL: NYLON 66(UL)
- FLAME CLASS: 94V-0/94V-2
- COLOR: BLACK

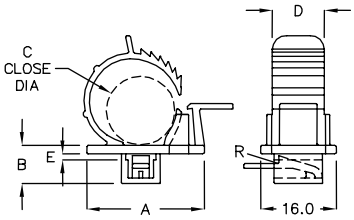

PART NO	A	B	C CLOSE DIA	D	E	R	ASSEMBLE WITH P.G. PART	PACKAGE
FWM-15QL	20.5	8.3	ø11.5~ø15.3	11.0	1.3	R0.1	YJP-86HC	100
FYA-15KC	24.8	8.1	ø11.5~ø15.3	11.0	1.35	R0.2	YJA-85, YJA-85KT, YJB-100 YJC-64C, YJC-64MK, YJF-94 YJF-116KH, YJK-84R, YJL-83M YJM-84K, YJQ-100A, YJR-86A YJS-87C, PSK-110AC	
FYA-15TR	24.8	8.1	ø11.5~ø15.3	11.0	1.3	R0.1		

ASSEMBLE WITH P.G PART YJA-SERIES, YJB-SERIES, YJC-SERIES, YJF-SERIES, YJK-SERIES, YJL-SERIES, YJM-SERIES, YJP-SERIES, YJQ-SERIES, YJR-SERIES, YJS-SERIES or PSK-SERIES
(Page 12-5-2, 12-5-3~12-6-1, 12-6-3~7-1, 12-7-3~8-1, 12-9-1~2, 12-10-1~2, 12-11-1~2)

电源线固定座 POWER CORD MOUNTING——12-13-3

- MATERIAL: NYLON 66(UL)
- FLAME CLASS: 94V-0/94V-2
- COLOR: BLACK

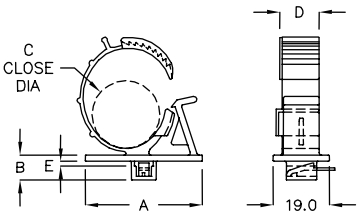

PART NO	A	B	C CLOSE DIA	D	E	ASSEMBLE WITH P.G. PART	PACKAGE
FWM-26SA	39.9	8.5	ø21.0~ø26.5	13.3	1.65	YJA-85PD, YJH-125 YJH-180HG, YJW-85F PSF-85	100

ASSEMBLE WITH P.G PART YJA-SERIES, YJH-SERIES, YJW-SERIES, PSF-SERIES
(Page 12-5-2, 12-8-2~3, 12-12-1)

返回图片索引

电源线固定座 POWER CORD MOUNTING——12-14-1

- MATERIAL: NYLON 66(UL)
- FLAME CLASS: 94V-0/94V-2
- COLOR: BLACK

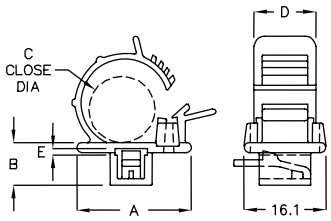

PART NO	A	B	C CLOSE DIA	D	E	ASSEMBLE WITH P.G. PART	PACKAGE
FYD-13K	22.5	8.4	ø11.0~ø13.0	12.1	1.3	YJA-85, YJA-85KT, YJB-100 YJC-64C, YJC-64MK, YJF-94 YJF-116KH, YJK-84R, YJL-83M YJM-84K, YJQ-100A, YJR-86A YJS-87C, PSK-110AC	100
FYDA-13C	22.5	8.45	ø11.0~ø13.0	12.0	1.35		

ASSEMBLE WITH P.G PART YJA-SERIES, YJB-SERIES, YJC-SERIES, YJF-SERIES, YJK-SERIES, YJL-SERIES, YJM-SERIES, YJQ-SERIES, YJR-SERIES, YJS-SERIES or PSK-SERIES
(Page 12-5-2, 12-5-3~12-6-1, 12-6-2, 12-7-3~12-8-1, 12-9-1~2, 12-10-1~2, 12-11-1~2)

电源线固定座 POWER CORD MOUNTING——12-14-2

- MATERIAL: NYLON 66(UL)
- FLAME CLASS: 94V-0/94V-2
- COLOR: BLACK

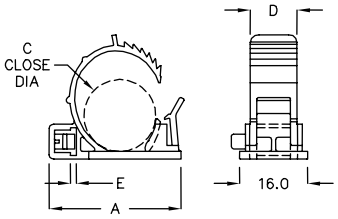

PART NO	A	C CLOSE DIA	D	E	ASSEMBLE WITH P.G. PART	PACKAGE
FYL-17C	31.1	ø15.0~ø17.0	11.0	1.35	YJA-85, YJA-85KT, YJB-100 YJC-64C, YJC-64MK, YJF-94 YJF-116KH, YJK-84R, YJL-83M YJM-84K, YJQ-100A, YJR-86A YJS-87C, PSK-110AC	100

ASSEMBLE WITH P.G PART YJA-SERIES, YJB-SERIES, YJC-SERIES, YJF-SERIES, YJK-SERIES, YJL-SERIES, YJM-SERIES, YJQ-SERIES, YJR-SERIES, YJS-SERIES or PSK-SERIES
(Page 12-5-2, 12-5-3~12-6-1, 12-6-2, 12-7-3~12-8-1, 12-9-1~2, 12-10-1~2, 12-11-1~2)

电源线固定座 POWER CORD MOUNTING——12-14-3

- MATERIAL: NYLON 66(UL)
- FLAME CLASS: 94V-0/94V-2
- COLOR: BLACK
- USE M3 SCREW

PART NO	A	SUITABLE BUNDLE DIA	PACKAGE
YAT-83A	83.06	ø8.0~ø16.0	100

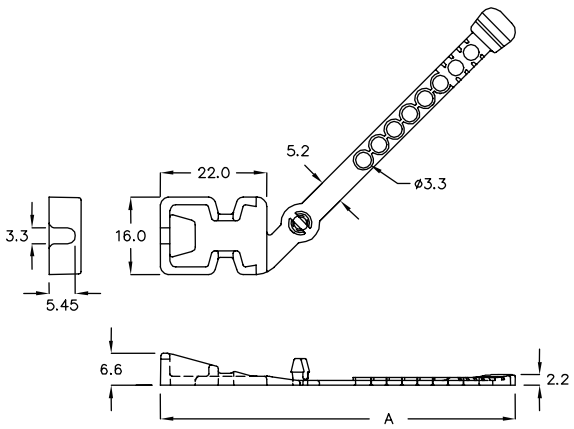

电线束线带 MOUNTING CABLE TIE 12-15-1

- MATERIAL: NYLON 66(UL)
- FLAME CLASS: 94V-0/94V-2
- COLOR: NATURAL

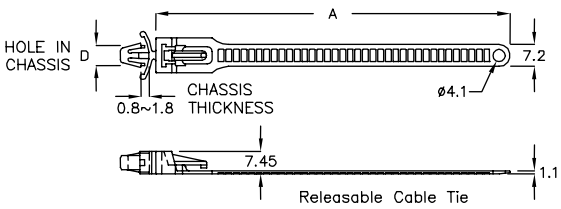

PART NO	A	D HOLE IN CHASSIS	APPROX LENGTH	APPROX WIDTH	MAX BUNDLE DIA	PACKAGE
YAA–118	117.4	ø6.5	129(5.08”)	7.2(0.284”)	28.5(1.125”)	100
YAA–150	150.0	ø3.8	160(6.30”)	7.2(0.284”)	40.0(1.575”)	

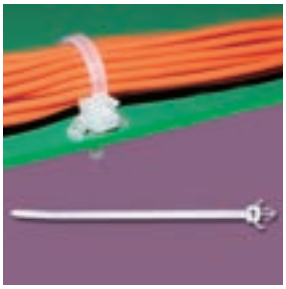

电线束线带 MOUNTING CABLE TIE 12-15-2

- MATERIAL: NYLON 66(UL)
- FLAME CLASS: 94V-0/94V-2
- COLOR: NATURAL

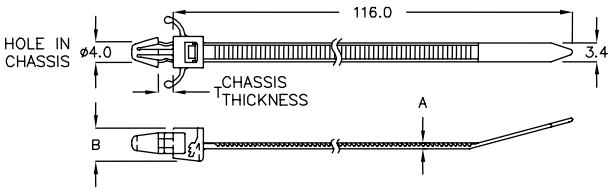

PART NO	A	B	T CHASSIS THICKNESS	APPROX LENGTH	APPROX WIDTH	MAX BUNDLE DIA	PACKAGE
YJ–123	1.1	6.8	0.8~2.0	123(4.84”)	3.4(0.13”)	25.4(1.00”)	500
YJ–123TK	1.3	6.0	2.0~2.5	123(4.84”)	3.4(0.13”)	25.4(1.00”)	

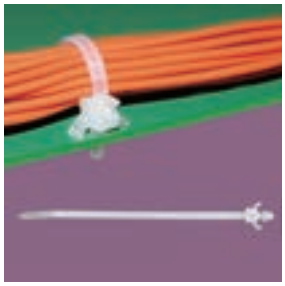

电源线固定带 CABLE TIE 12-15-3

- MATERIAL: NYLON 66(UL)
- FLAME CLASS: 94V-0/94V-2
- COLOR: NATURAL

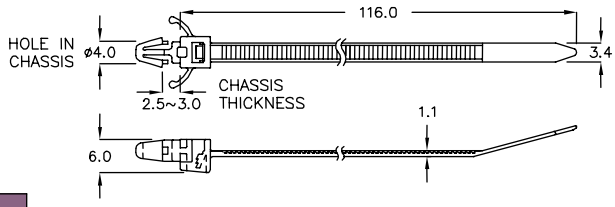

PART NO	APPROX LENGTH	APPROX WIDTH	MAX BUNDLE DIA	PACKAGE
YJ–123HR	123.6(4.86”)	3.4(0.13”)	25.4(1.00”)	500

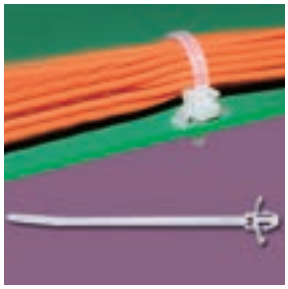

电线束线带 MOUNTING CABLE TIE 12-15-4

- MATERIAL: NYLON 66(UL)
- FLAME CLASS: 94V-0/94V-2
- COLOR: NATURAL

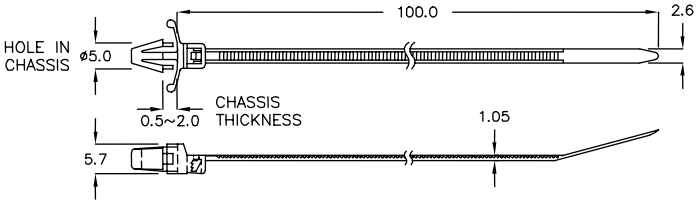

PART NO	APPROX LENGTH	APPROX WIDTH	MAX BUNDLE DIA	PACKAGE
YJ–99T	108(4.25”)	2.6(0.10”)	22.0(0.86”)	500

电线束线带 MOUNTING CABLE TIE 12-16-1

- MATERIAL: NYLON 66(UL)
- FLAME CLASS: 94V-0/94V-2
- COLOR: NATURAL

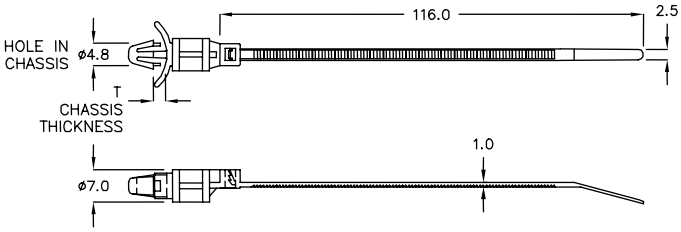

PART NO	APPROX LENGTH	APPROX WIDTH	MAX BUNDLE DIA	T CHASSIS THICKNESS	PACKAGE
YJ-138T	114.8(4.52")	2.5(0.10")	25.4(1.00")	0.6~2.0	500

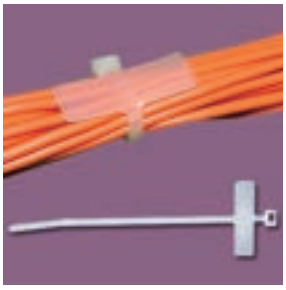

电线束线带 MARKER TIE 12-16-2

- MATERIAL: NYLON 66(UL)
- FLAME CLASS: 94V-0/94V-2
- COLOR: NATURAL

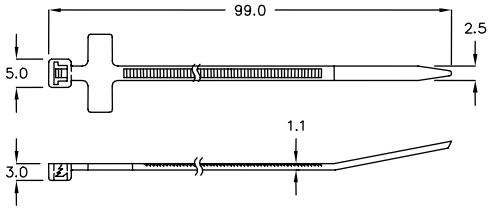

PART NO	APPROX LENGTH	APPROX WIDTH	MAX BUNDLE DIA	PACKAGE
MCT-98	99(3.86")	2.5(0.10")	21.0(0.81")	500

电线束线带 MOUNTING CABLE TIE 12-16-3

- MATERIAL: NYLON 66(UL)
- FLAME CLASS: 94V-0/94V-2
- COLOR: BLACK

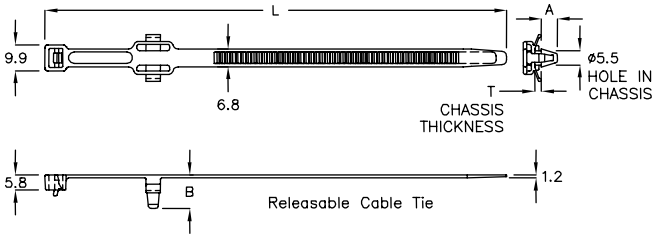

PART NO	A	B	L	APPROX WIDTH	MAX BUNDLE DIA	T CHASSIS THICKNESS	PACKAGE
YAM-180MQ	6.0	12.8	180(7.09")	6.8(0.268")	45.0(1.772")	0.5~2.0	200
YAM-180RC	5.1	12.4	180(7.09")	6.8(0.268")	45.0(1.772")	2.3~2.5	

电源收线固定带 STRAP TIE 12-16-4

- MATERIAL: PE
- COLOR: NATURAL,BLACK

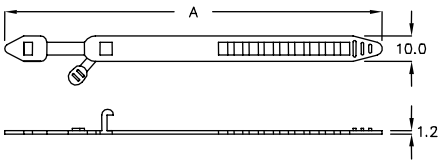

PART NO	A	SUITABLE BUNDLE DIA	PACKAGE
BST-1	138.8	ø10.0~ø27.0	500

电源收线固定带 STRAP TIE 12-17-1

- MATERIAL: PE
- COLOR: BLACK

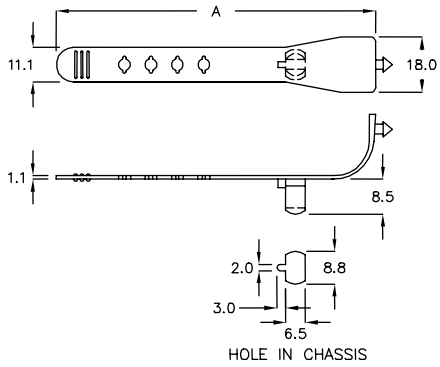

PART NO	A	PACKAGE
BST-2	103.6	200

电源收线固定带 STRAP TIE 12-17-2

- MATERIAL: NYLON 66(UL)
- FLAME CLASS: 94V-0 / 94V-2
- COLOR: NATURAL, BLACK

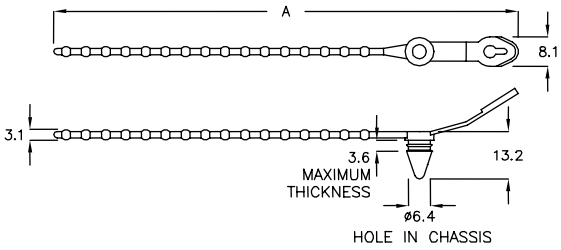

PART NO	A	SUITABLE BUNDLE DIA	PACKAGE
BST-3	129.0	ø15.0~ø35.0	500

电源收线固定带 STRAP TIE 12-17-3

- MATERIAL: NYLON 66(UL)
- FLAME CLASS: 94V-0/94V-2
- COLOR: BLACK

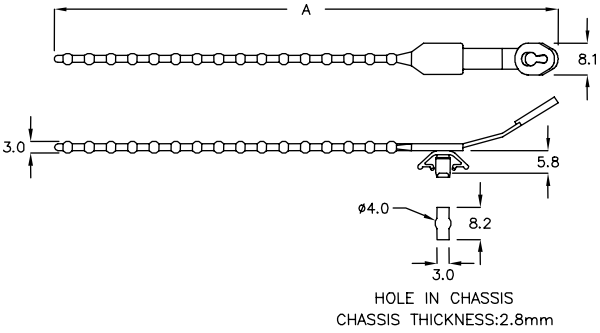

INSERT WITH 90 DEGREE ANGLE
AND PRESS DOWN

PART NO	A	SUITABLE BUNDLE DIA	PACKAGE
BST-128	128.3	ø15.0~ø33.0	500

电源收线固定带 STRAP TIE 12-17-4

- MATERIAL: NYLON 66(UL)
- FLAME CLASS: 94V-0/94V-2
- COLOR: NATURAL, BLACK

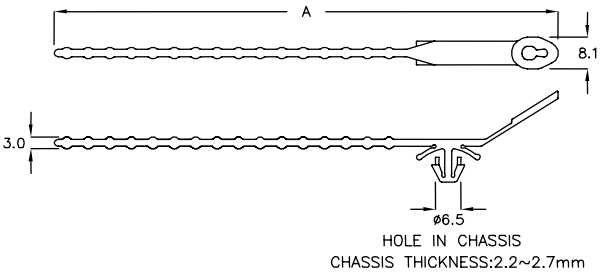

PART NO	A	SUITABLE BUNDLE DIA	PACKAGE
BST-129	129.0	ø15.0~ø35.0	500

电源收线固定带 STRAP TIE 12-18-1

- MATERIAL: PE
- COLOR: BLACK

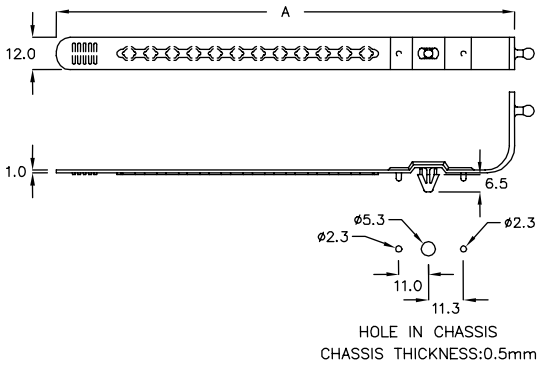

PART NO	A	SUITABLE BUNDLE DIA	PACKAGE
BST−170C	170.0	ø30.0~ø44.0	100

电源收线固定带 STRAP TIE 12-18-2

- MATERIAL: PE
- COLOR: BLACK

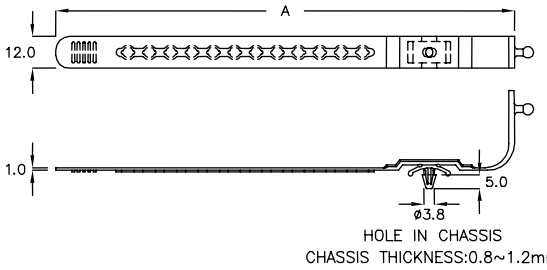

PART NO	A	SUITABLE BUNDLE DIA	PACKAGE
BST−172CF	172.0	ø30.0~ø44.0	200

电源收线固定带 STRAP TIE 12-18-3

- MATERIAL: NYLON 66(UL)
- FLAME CLASS: 94V-0/94V-2
- COLOR: BLACK

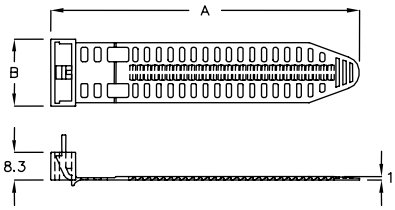

PART NO	A	B	SUITABLE BUNDLE DIA	PACKAGE
YJD−85H	92.5	20.1	ø9.0~ø19.0	100

电源收线固定带 STRAP TIE 12-18-4

- MATERIAL: PE
- COLOR: BLACK

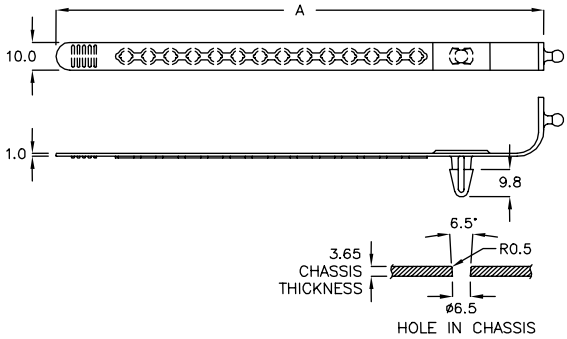

PART NO	A	SUITABLE BUNDLE DIA	PACKAGE
BST−174A	174.5	ø25.0~ø44.0	100

电源收线固定带 STRAP TIE 12-19-1

- MATERIAL: NYLON 66(UL)
- FLAME CLASS: 94V-0/94V-2
- COLOR: NATURAL

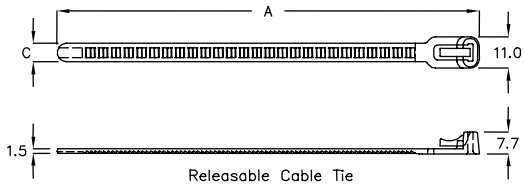

PART NO	A	C	SUITABLE BUNDLE DIA	PACKAGE
YAK−148	148.0	7.5	ø8.0~ø36.0	500
YAK−196A	196.4	5.5	ø8.0~ø50.0	

电源收线固定带 STRAP TIE 12-19-2

- MATERIAL: NYLON 66(UL)
- FLAME CLASS: 94V-0/94V-2
- COLOR: BLACK

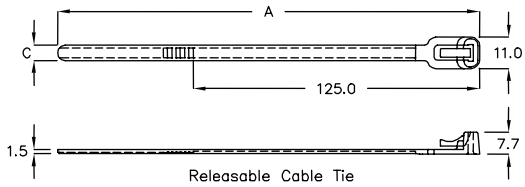

PART NO	A	C	SUITABLE BUNDLE DIA	PACKAGE
YAKS−196	196.4	5.5	ø33.0~ø35.0	500

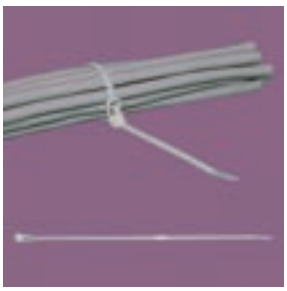

电源收线固定带 STRAP TIE 12-19-3

- MATERIAL: NYLON 66(UL)
- FLAME CLASS: 94V-0/94V-2
- COLOR: NATURAL
- 按下杠杆即可解开，可重复使用

NEW

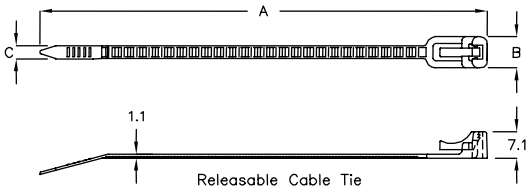

	PART NO	A	B	C	SUITABLE BUNDLE DIA	PACKAGE
★	YJG−120	120.0	8.4	3.5	ø5.0~ø25.0	500
★	YJG−260	260.0	9.0	4.0	ø8.0~ø70.0	

电源收线固定带 STRAP TIE 12-19-4

- MATERIAL: NYLON 66(UL)
- FLAME CLASS: 94V-0/94V-2
- COLOR: NATURAL, BLACK

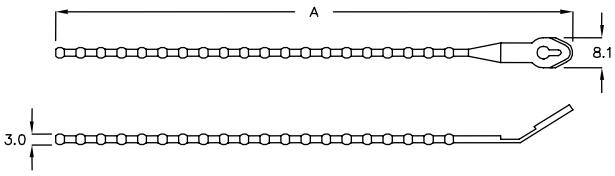

PART NO	A	SUITABLE BUNDLE DIA	PACKAGE
BST−3A	142.0	ø5.5~ø39.0	500

电源收线固定带 STRAP TIE 12-20-1

- MATERIAL: NYLON 66(UL)
- FLAME CLASS: 94V-0 / 94V-2
- COLOR: BLACK

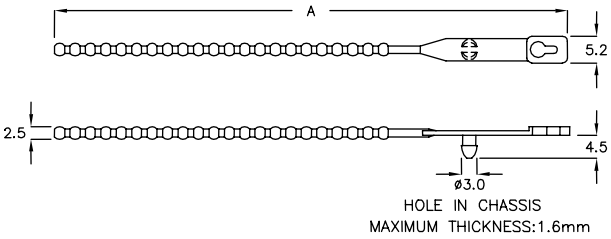

PART NO	A	SUITABLE BUNDLE DIA	PACKAGE
BST-5	103.0	ø9.5~ø27.0	500

活动束线带 MOVABLE TIE 12-20-2

- MATERIAL: NYLON 66(UL)
- FLAME CLASS: 94V-0/94V-2
- COLOR: NATURAL, BLACK

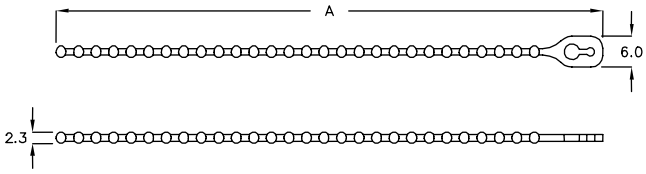

PART NO	A	SUITABLE BUNDLE DIA	PACKAGE
BST-6C	70.0	ø6.0~ø17.0	500
BST-6HJ	88.0	ø6.0~ø20.0	
BST-6A	106.0	ø6.0~ø27.0	

活动束线带 STRAP TIE 12-20-3

- MATERIAL: NYLON 66(UL)
- FLAME CLASS: 94V-0/94V-2
- COLOR: BLACK

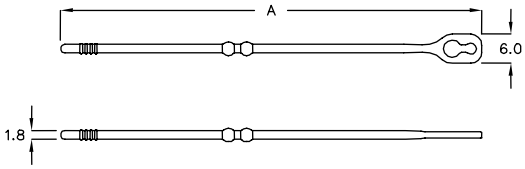

PART NO	A	SUITABLE BUNDLE DIA	PACKAGE
BXR-86	86.0	ø13.0	500

活动束线带 STRAP TIE 12-20-4

- ATERIAL: NYLON 66(UL)
- FLAME CLASS: 94V-0/94V-2
- COLOR: NATURAL,BLACK

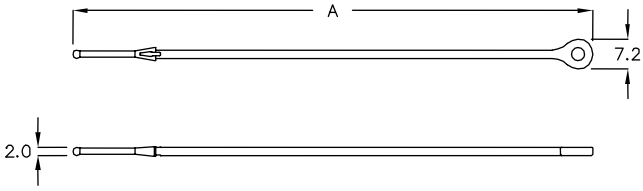

PART NO	A	SUITABLE BUNDLE DIA	PACKAGE
BFN-102	125.6	ø30.0	500

活动束线带 STRAP TIE 12-21-1

- MATERIAL: NYLON 66(UL)
- FLAME CLASS: 94V-0/94V-2
- COLOR: BLACK

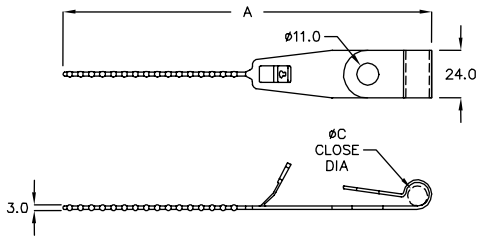

PART NO	A	C CLOSE DIA	SUITABLE BUNDLE DIA	PACKAGE
BST-185P	185.0	ø10.0	ø15.4~ø32.4	10

电源收线固定带 STRAP TIE 12-21-2

- MATERIAL: PE
- COLOR: NATURAL,BLACK

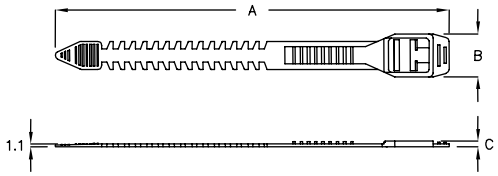

PART NO	A	B	C	SUITABLE BUNDLE DIA	PACKAGE
LST-6	141.5	15.5	2.05	ø16.0~ø34.0	500
LST-8	158.5	15.8	2.5	ø26.0~ø38.0	100

电源收线固定带 STRAP TIE 12-21-3

- MATERIAL: PE
- COLOR: NATURAL,BLACK

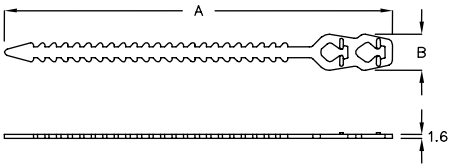

PART NO	A	B	SUITABLE BUNDLE DIA	PACKAGE
LST-10	208.0	14.6	ø5.0~ø47.0	500

电源收线固定带 STRAP TIE 12-21-4

- COLOR: NATURAL,BLACK

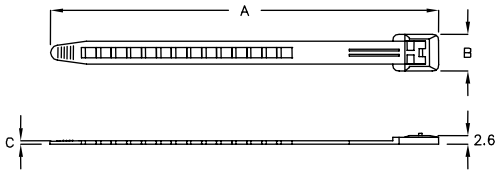

PART NO	MATERIAL	A	B	C	SUITABLE BUNDLE DIA	PACKAGE
PST-1	N66	125.0	13.0	1.6	ø15.0~ø33.0	500
PST-2A	N66/PE	151.5	14.5	1.4	ø15.0~ø39.0	
PST-5	PE	180.4	14.5	1.5	ø15.5~ø47.5	
PST-6	PE	209.0	14.5	1.5	ø20.0~ø55.0	

返回图片索引

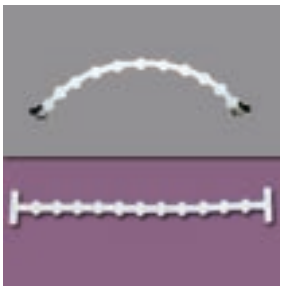

活动束线带 STRAP TIE 12-22-1

- MATERIAL: NYLON 66(UL)
- FLAME CLASS: 94V-0/94V-2
- COLOR: NATURAL

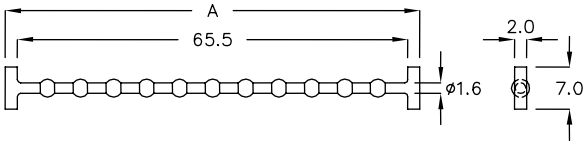

PART NO	A	PACKAGE
BST-4	69.5	1000

把手 PULLER 12-22-2

- MATERIAL: NYLON 66(UL)
- FLAME CLASS: 94V-0/94V-2
- COLOR: BLACK

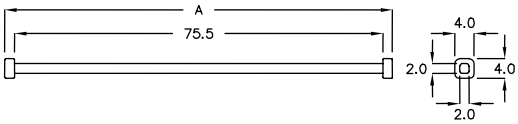

PART NO	A	PACKAGE
BSQ-75A	79.5	2000

打包扣 PACKING FASTENER 12-22-3

- MATERIAL: PP
- COLOR: NATURAL

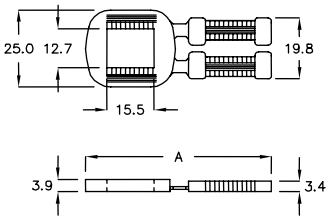

PART NO	A	PACKAGE
PF-1	60.8	200

13

其他塑胶制品
HANDLE
HOUSING
COVER

把手 HANDLE 13-2-1

- MATERIAL: POM(UL)
- FLAME CLASS: 94HB
- COLOR: BLACK

PART NO	A	B	PACKAGE
BSA-38	44.55	36.7	200

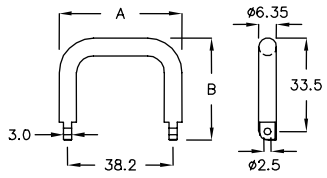

把手 HANDLE 13-2-2

- MATERIAL: ABS+PC(UL)
- FLAME CLASS: 94V-0
- COLOR: BLACK
- USE M3.5 TAPPING SCREW

PART NO	A	B	PACKAGE
BSA-64	70.4	31.6	200

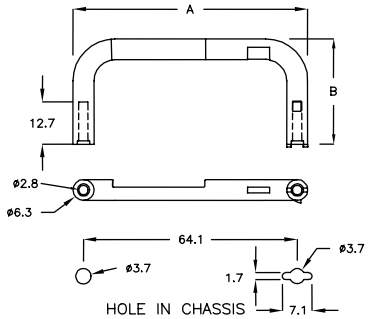

把手 HANDLE 13-2-3

- MATERIAL: ABS+PC, PC(UL)
- FLAME CLASS: 94V-0
- COLOR: BLACK
- MATERIAL: BRASS

PART NO	MATERIAL	A	B	C	D	PACKAGE
BWK-32PM	ABS+PC	38.3	29.3	32.0	ø6.3	200
BWK-45DK	PC	52.3	22.5	45.3	ø7.0	
BWK-51CT	ABS+PC	57.3	32.0	51.0	ø6.3	

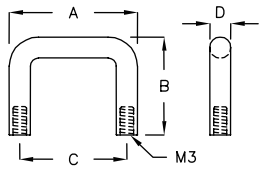

把手 HANDLE 13-2-4

- MATERIAL: PC(UL)
- FLAME CLASS: 94V-0
- COLOR: BLACK
- MATERIAL: BRASS

PART NO	A	B	PACKAGE
BSG-30MF	37.2	27.0	200

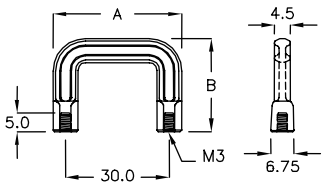

把手 HANDLE 13-2-5

- MATERIAL: ABS+PC(UL)
- FLAME CLASS: 94V-0
- COLOR: BLACK

PART NO	A	B	PACKAGE
BSC-33	52.0	22.0	200

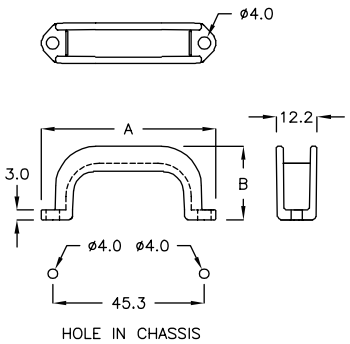

把手 HANDLE 13-3-1

- MATERIAL: ABS+PC
- FLAME CLASS: 94V-0
- COLOR: BLACK
- USE M3.5x8 TAPPING SCREW

PART NO	A	B	PACKAGE
BWN-26	33.0	35.0	200

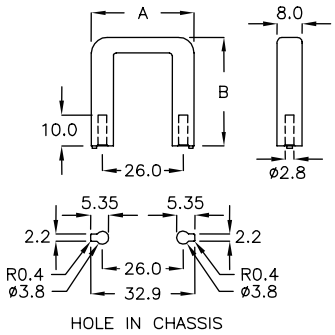

把手 HANDLE 13-3-2

- MATERIAL: PC(UL)
- COLOR: NATURAL
- USE M3 SCREW

NEW

	PART NO	A	B	PACKAGE
★	BSA-32A	38.0	34.7	200

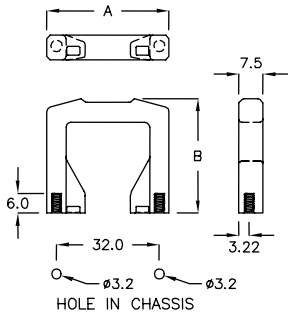

把手 HANDLE 13-3-3

- MATERIAL: PC(UL)
- COLOR: NATURAL
- USE M3 TAPPING SCREW

NEW

	PART NO	A	B	PACKAGE
★	BSA-32HC	38.0	35.0	200

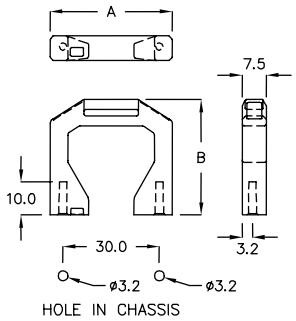

把手 HANDLE 13-3-4

- MATERIAL: PC(UL)
- FLAME CLASS: 94V-0
- COLOR: NATURAL
- USE M3.5x8 TAPPING SCREW

PART NO	A	B	PACKAGE
BSA-46K	55.4	32.7	200

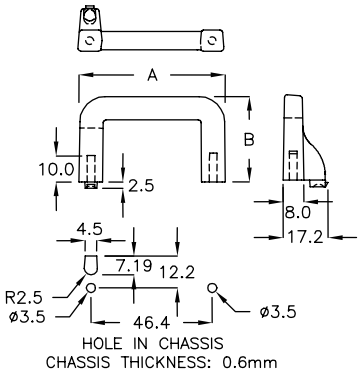

把手 HANDLE 13-3-5

- MATERIAL: ABS+PC(UL)
- FLAME CLASS: 94V-0
- COLOR: BLACK
- USE: M3.5 TAPPING SCREW

PART NO	A	B	PACKAGE
BSA-130	136.3	27.65	100

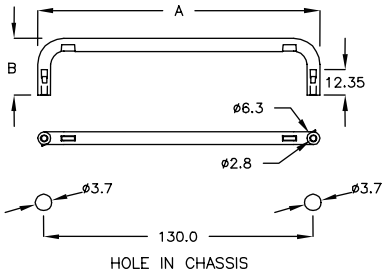

把手 HANDLE 13-4-1

- MATERIAL: ABS+PC(UL)
- FLAME CLASS: 94V-0
- COLOR: BLACK
- USE M3 TAPPING SCREW

PART NO	A	B	C	D	E	PACKAGE
BWA-36	42.0	30.25	26.0	9.3	7.1	200
BWA-40H	42.0	20.0	30.0	10.0	6.8	

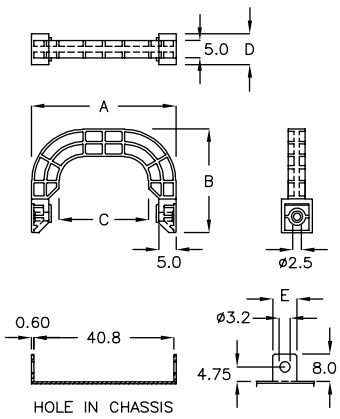

把手 HANDLE 13-4-2

- MATERIAL: ABS+PC(UL)
- FLAME CLASS: 94V-0
- COLOR: BLACK
- USE M3x4 TAPPING SCREW

PART NO	A	B	PACKAGE
BWH-43A	43.5	30.65	200

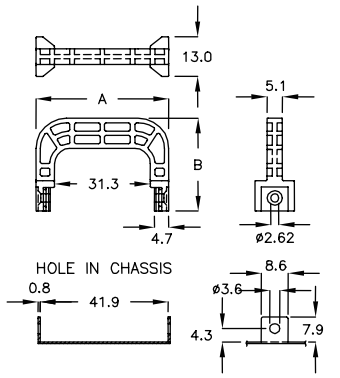

把手 HANDLE 13-4-3

- MATERIAL: PC(UL)
- FLAME CLASS: 94V-0
- COLOR: BLACK
- USE M3x4 TAPPING SCREW

PART NO	A	B	C	PACKAGE
BWF-40GP	41.6	30.0	7.25	200
BWF-40TS	41.6	30.0	6.85	

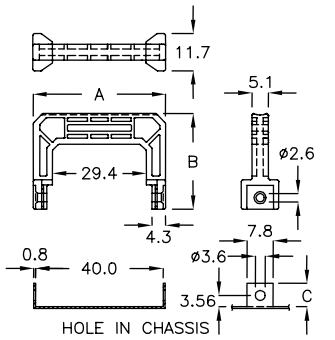

把手 HANDLE 13-4-4

- MATERIAL: PC(UL)
- FLAME CLASS: 94V-0
- COLOR: BLACK
- USE M4 SELF TAPPING SCREW or M3 SCREW

PART NO	A	B	PACKAGE
BWD-47	51.0	30.5	200

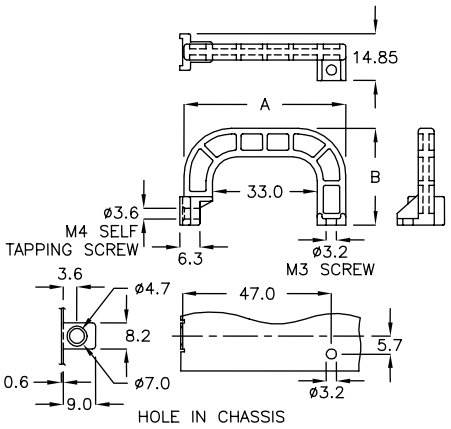

把手 HANDLE 13-5-1

- MATERIAL: ABS+PC(UL)
- FLAME CLASS: 94V-0
- COLOR: BLACK
- MATERIAL: SPCC

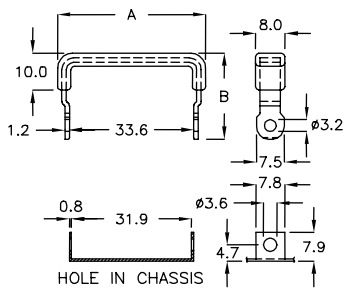

PART NO	A	B	PACKAGE
BWJ-33GH	40.0	23.25	35

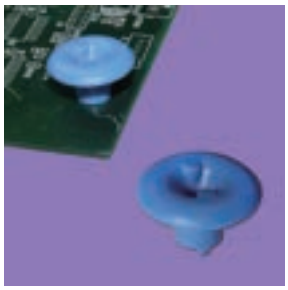

把手 HANDLE 13-5-2

- MATERIAL: ABS+PC(UL)
- FLAME CLASS: 94V-0
- COLOR: BLUE
- SCREW: M3 TAPPING SCREW

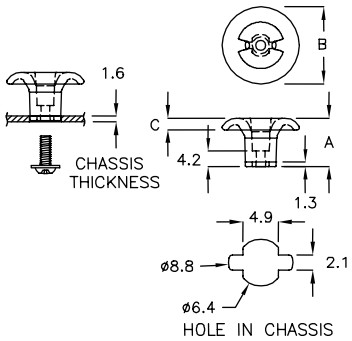

PART NO	A	B	C	PACKAGE
BJA-13K	13.3	21.0	3.2	100

把手 HANDLE 13-5-3

- MATERIAL: ABS+PC(UL)
- FLAME CLASS: 94V-0
- COLOR: BLUE
- USE M3 TAPPING SCREW

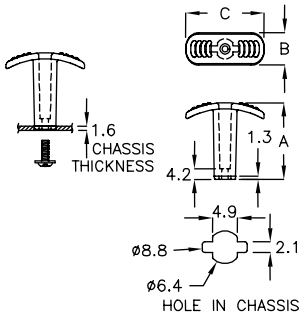

PART NO	A	B	C	PACKAGE
BJA-30C	30.2	12.9	30.9	100

IR 座 IR RECEIVER HOUSING 13-5-4

- MATERIAL: NYLON 66(UL)
- FLAME CLASS: 94V-0/94V-2
- COLOR: BLACK

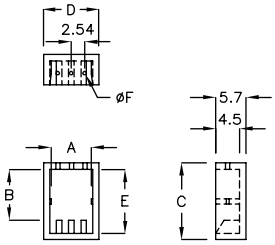

PART NO	A	B	C	D	E	F	PACKAGE
CDS-1A	7.5	9.6	14.4	10.4	12.0	ø0.8	500
CDS-1C	6.6	8.6	14.4	9.3	10.4	ø1.0	

IR 座 IR RECEIVER HOUSING 13-6-1

- MATERIAL: NYLON 66(UL)
- FLAME CLASS: 94V-0/94V-2
- COLOR: NATURAL

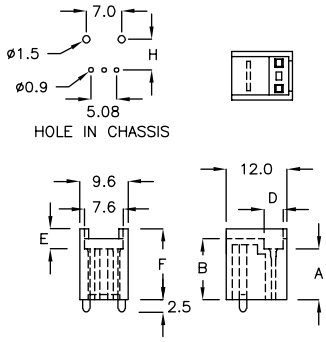

PART NO	A	B	D	E	F	H	PACKAGE
CDS-2A	1.5	3.5	3.8	4.0	5.5	6.0	500
CDS-2M	1.5	3.5	3.8	4.0	5.5	6.0	
CDS-4G	4.5	6.5	3.8	4.0	8.5	6.0	
CDS-4WP	4.15	6.5	5.0	4.35	8.5	6.0	
CDS-5F	4.5	6.5	3.8	3.5	8.0	6.0	
CDS-07	7.0	9.0	3.8	4.0	11.0	6.0	
CDS-10A	10.0	12.0	3.8	4.0	14.0	6.0	
CDS-13A	13.7	15.7	3.8	4.0	17.7	5.3	
CDS-13DF	13.35	15.7	5.0	4.35	17.7	5.3	

IR 座 IR RECEIVER HOUSING 13-6-2

- MATERIAL: NYLON 66(UL)
- FLAME CLASS: 94V-0/94V-2
- COLOR: BLACK

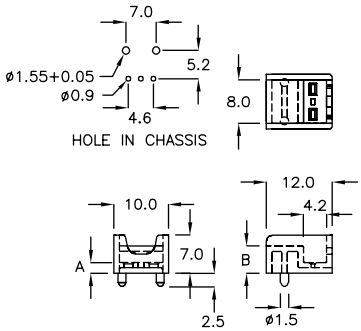

PART NO	A	B	PACKAGE
CDS-2D	2.0	5.0	500

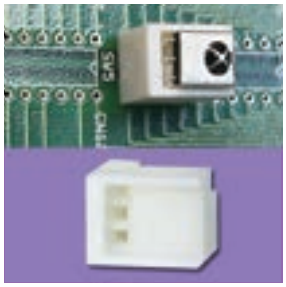

IR 座 IR RECEIVER HOUSING 13-6-3

- MATERIAL: NYLON 66(UL)
- FLAME CLASS: 94V-0/94V-2
- COLOR: NATURAL

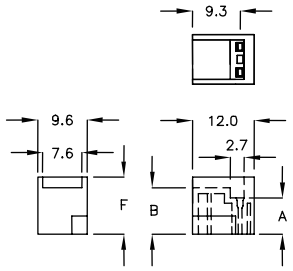

PART NO	A	B	F	PACKAGE
CDS-7A	7.0	9.0	11.0	500

IR 座 IR RECEIVER HOUSING 13-6-4

- MATERIAL: NYLON 66(UL)
- FLAME CLASS: 94V-0/94V-2
- COLOR: NATURAL

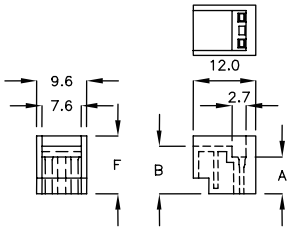

PART NO	A	B	F	PACKAGE
CDS-7B	7.0	9.0	11.0	500

IR 座 IR RECEIVER HOUSING 13-7-1

- MATERIAL: NYLON 66(UL)
- FLAME CLASS: 94V-0/94V-2
- COLOR: NATURAL

PART NO	A	B	C	F	PACKAGE
CDS-04	3.0	4.0	3.0	1.55	1000
CDS-4H	3.0	4.0	1.4	1.55	500
CDS-8A	6.6	7.6	3.0	1.60	
CDS-12	10.9	11.9	3.0	1.55	

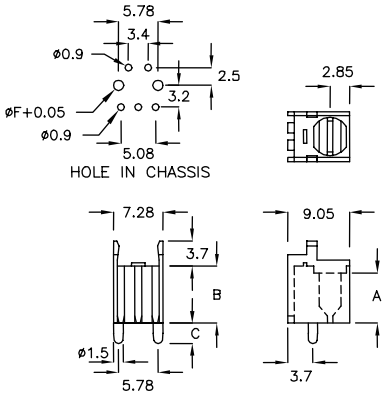

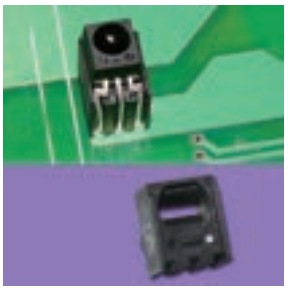

IR 座 IR RECEIVER HOUSING 13-7-2

- MATERIAL: NYLON 66(UL)
- FLAME CLASS: 94V-0/94V-2
- COLOR: BLACK

PART NO	A	B	PACKAGE
CDS-6A	5.0	6.0	500

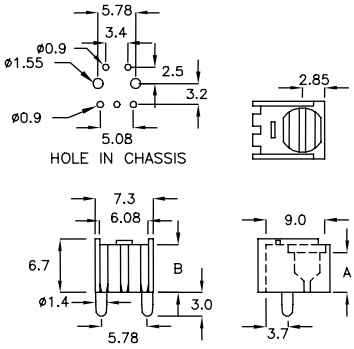

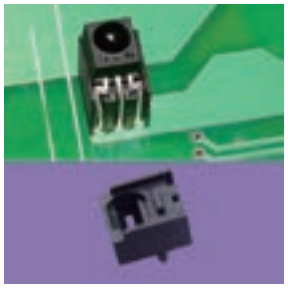

IR 座 IR RECEIVER HOUSING 13-7-3

- MATERIAL: NYLON 66(UL)
- FLAME CLASS: 94V-0/94V-2
- COLOR: BLACK

PART NO	A	B	PACKAGE
CDS-4D	4.0	5.0	1000

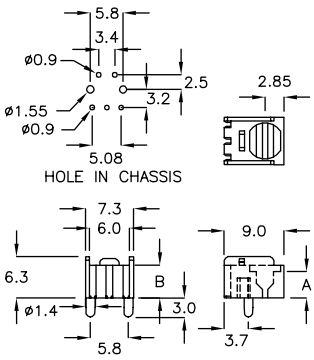

IR 座 IR RECEIVER HOUSING 13-7-4

- MATERIAL: NYLON 66(UL)
- FLAME CLASS: 94V-0/94V-2
- COLOR: BLACK

PART NO	A	B	C	D	E	F	G	H	PACKAGE
CDS-03	2.0	3.0	7.7	8.9	3.2	4.5	5.78	11.5	500
CDS-6C	5.0	6.0	6.1	7.3	3.2	2.5	4.5	9.05	
CDS-6D	5.0	6.0	6.1	7.3	3.2	2.5	4.5	9.05	
CDS-8C	5.0	8.0	6.1	7.3	3.2	2.5	4.5	9.05	

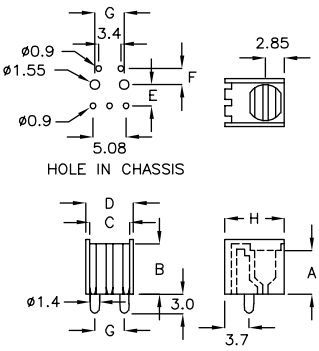

IR 座 IR RECEIVER HOUSING 13-8-1

- MATERIAL: NYLON 66(UL)
- FLAME CLASS: 94V-0/94V-2
- COLOR: BLACK

PART NO	A	B	C	PACKAGE
CDS-6J	5.0	6.0	9.05	500

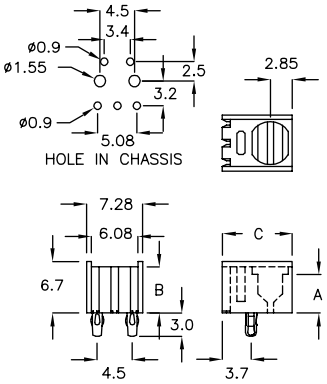

IR 座 IR RECEIVER HOUSING 13-8-2

- MATERIAL: NYLON 66(UL)
- FLAME CLASS: 94V-0/94V-2
- COLOR: BLACK

PART NO	A	C	PACKAGE
CDS-13	13.0	9.05	500

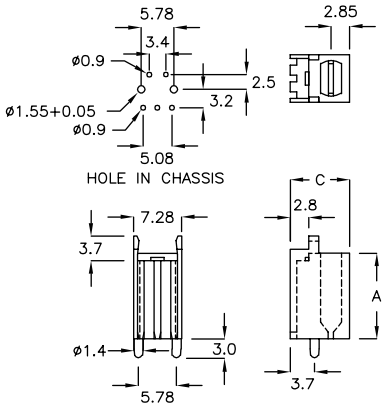

IR 座 IR RECEIVER HOUSING 13-8-3

- MATERIAL: NYLON 66(UL)
- FLAME CLASS: 94V-0/94V-2
- COLOR: BLACK

PART NO	A	B	C	PACKAGE
CDS-10C	9.6	10.6	9.05	500

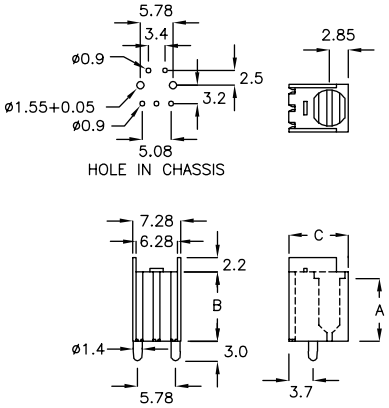

IR 座 IR RECEIVER HOUSING 13-8-4

- MATERIAL: NYLON 66(UL)
- FLAME CLASS: 94V-0/94V-2
- COLOR: BLACK

PART NO	A	C	PACKAGE
CDS-11A	12.4	10.0	500

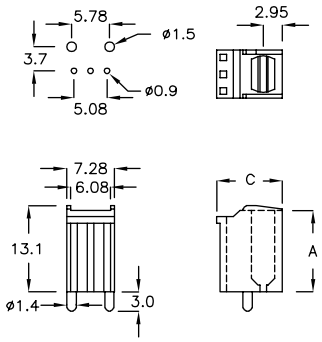

IR 座 IR RECEIVER HOUSING 13-9-1

- MATERIAL: NYLON 66(UL)
- FLAME CLASS: 94V-0/94V-2
- COLOR: NATURAL

PART NO	A	B	PACKAGE
CDS-2C	2.0	7.0	1000
CDS-2F	5.0	10.0	

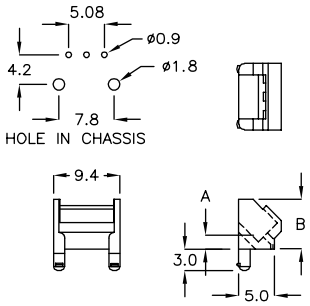

IR 座 IR RECEIVER HOUSING 13-9-2

- MATERIAL: NYLON 66(UL)
- FLAME CLASS: 94V-0/94V-2
- COLOR: BLACK

PART NO	A	C	PACKAGE
CDS-10D	10.1	9.04	500

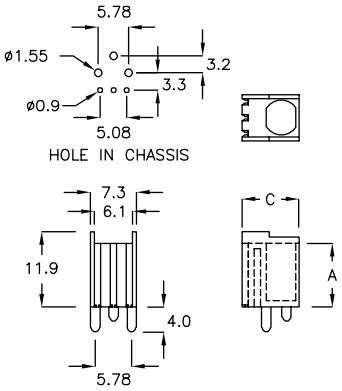

IR 座 IR RECEIVER HOUSING 13-9-3

- MATERIAL: NYLON 66(UL)
- FLAME CLASS: 94V-0/94V-2
- COLOR: BLACK

PART NO	A	B	PACKAGE
CDS-6K	6.1	10.3	500
CDS-10F	10.1	14.3	
CDS-11K	11.6	15.8	

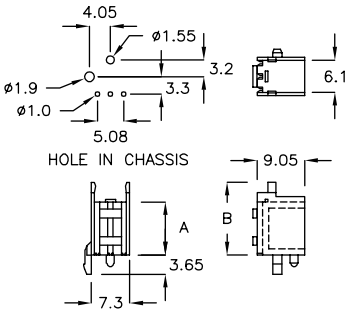

IR 座 IR RECEIVER HOUSING 13-9-4

- MATERIAL: NYLON 66(UL)
- FLAME CLASS: 94V-0/94V-2
- COLOR: BLACK

PART NO	A	B	PACKAGE
CDS-2H	2.6	8.0	1000

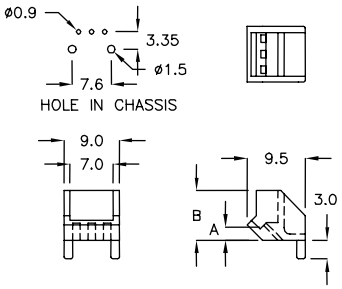

IR 座 IR RECEIVER HOUSING 13-9-5

- MATERIAL: NYLON 66(UL)
- FLAME CLASS: 94V-0/94V-2
- COLOR: BLACK

PART NO	A	B	L	PACKAGE
CDS-4C	2.85	4.15	11.1	1000
CDS-5DM	4.45	5.75	12.6	

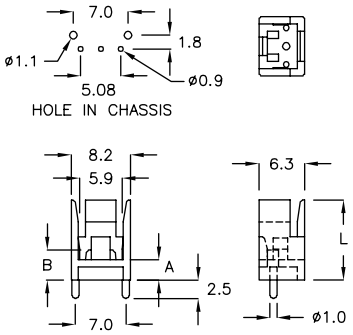

IR 座 IR RECEIVER HOUSING 13-10-1

- MATERIAL: NYLON 66(UL)
- FLAME CLASS: 94V-0/94V-2
- COLOR: BLACK

PART NO	A	L	PACKAGE
CDS-1J	1.3	8.9	1000
CDS-8DQ	8.3	15.9	500

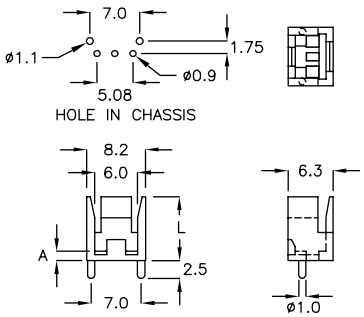

IR 座 IR RECEIVER HOUSING 13-10-2

- MATERIAL: NYLON 66(UL)
- FLAME CLASS: 94V-0/94V-2
- COLOR: BLACK

PART NO	A	PACKAGE
CDS-1F	1.0	2000

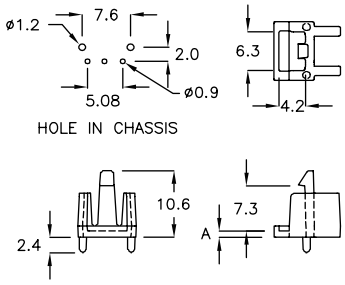

IR 座 IR RECEIVER HOUSING 13-10-3

- MATERIAL: NYLON 66(UL)
- FLAME CLASS: 94V-0/94V-2
- COLOR: NATURAL

PART NO	A	B	PACKAGE
CDS-2J	1.5	3.5	500

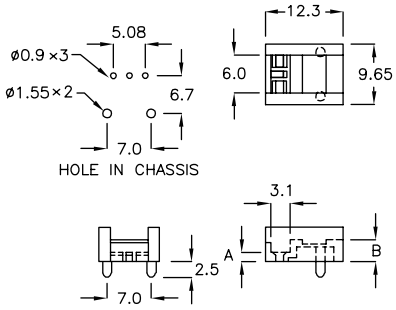

IR 座 IR RECEIVER HOUSING 13-10-4

- MATERIAL: NYLON 66(UL)
- FLAME CLASS: 94V-0/94V-2
- COLOR: BLACK

PART NO	A	PACKAGE
CDS-2PS	2.3	1000

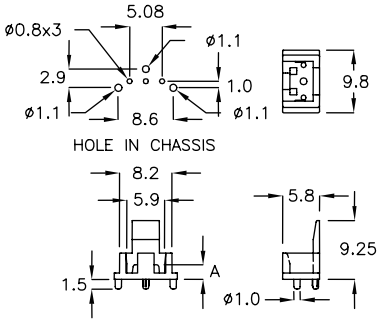

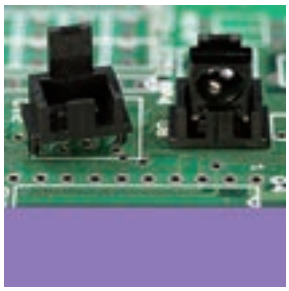

IR 座 IR RECEIVER HOUSING 13-10-5

- MATERIAL: NYLON 66(UL)
- FLAME CLASS: 94V-0/94V-2
- COLOR: BLACK

PART NO	A	PACKAGE
CDS-2K	2.3	1000

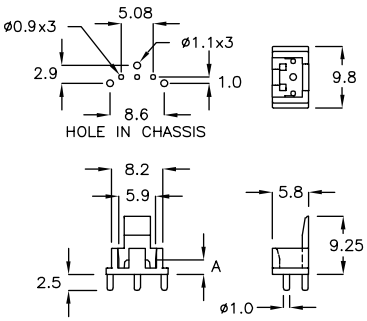

IR 座 IR RECEIVER HOUSING 13-11-1

- MATERIAL: NYLON 66(UL)
- FLAME CLASS: 94V-0/94V-2
- COLOR: BLACK

PART NO	A	PACKAGE
CDS-2L	1.7	500

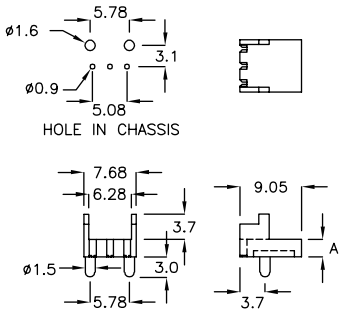

IR 座 IR RECEIVER HOUSING 13-11-2

- MATERIAL: NYLON 66(UL)
- FLAME CLASS: 94V-0/94V-2
- COLOR: BLACK

PART NO	A	B	C	PACKAGE
CDS-4F	5.08	ø1.5	3.5	1000

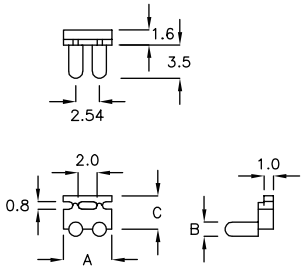

IR 座 IR RECEIVER HOUSING 13-11-3

- MATERIAL: NYLON 66(UL)
- FLAME CLASS: 94V-0/94V-2
- COLOR: BLACK

PART NO	A	PACKAGE
CDS-1TR	9.8	1000

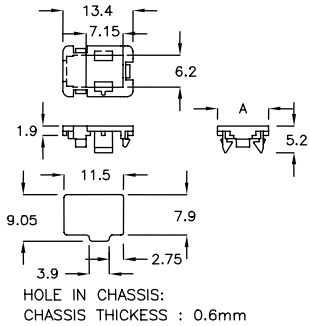

IR 座 IR RECEIVER HOUSING 13-11-4

- MATERIAL: NYLON 66(UL)
- FLAME CLASS: 94V-0/94V-2
- COLOR: BLACK

PART NO	A	T CHASSIS THICKNESS	PACKAGE
CDY-7M	7.0	1.6	200

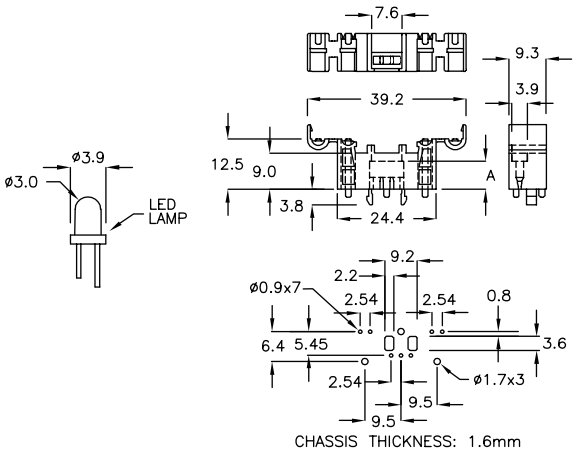

IR 座 IR RECEIVER HOUSING 13-11-5

- MATERIAL: NYLON 66(UL)
- FLAME CLASS: 94V-0/94V-2
- COLOR: BLACK

PART NO	A	PACKAGE
CDA-08	8.0	1000

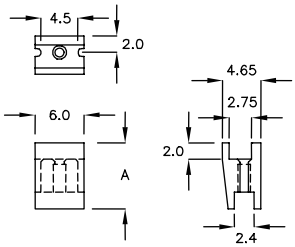

固定座 HOLDER 13-12-1

- MATERIAL: NYLON 66(UL)
- FLAME CLASS: 94V-0/94V-2
- COLOR: BLACK

PART NO	A	T CHASSIS THICKNESS	PACKAGE
CDT-4A	5.65	1.6	1000

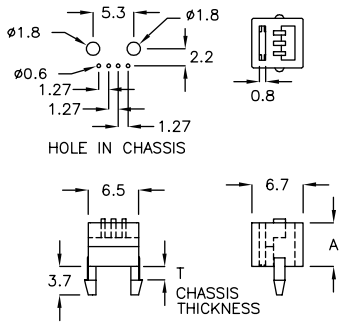

IR 座 IR RECEIVER HOUSING 13-12-2

- MATERIAL: NYLON 66(UL)
- FLAME CLASS :94V-0/94V-2
- COLOR: BLACK

PART NO	A	B	PACKAGE
EED-3A	1.2	3.3	2000

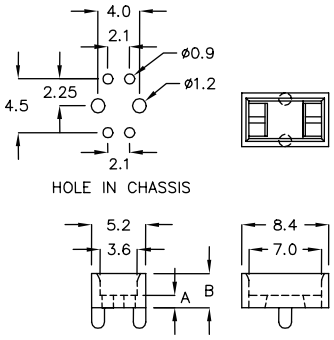

风扇罩 FAN COVER 13-12-3

- MATERIAL: ABS
- FLAME CLASS: 94V-0
- COLOR: BLACK

PART NO	A	PACKAGE
NBB-03	60.0	100

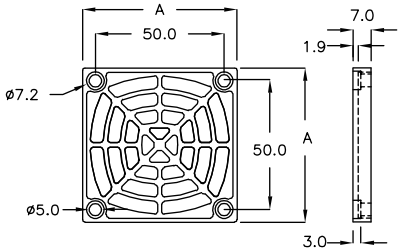

风扇罩 FAN COVER 13-12-4

- MATERIAL: NYLON 66(UL)
- FLAME CLASS: 94V-0/94V-2
- COLOR: BLACK

PART NO	A	B	PACKAGE
NBB-04	79.5	ø4.3	50

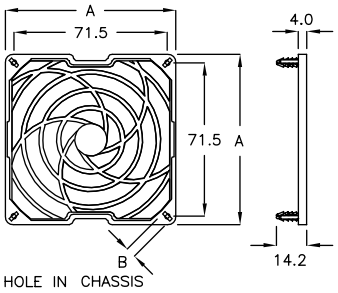

风扇罩 FAN COVER 13-12-5

- MATERIAL: PC(UL)
- FLAME CLASS: 94V-0
- COLOR: BLACK

PART NO	A	B HOLE IN CHASSIS	T CHASSIS THICKNESS	PACKAGE
NBR-40A	40.0	ø3.5	5.0	200

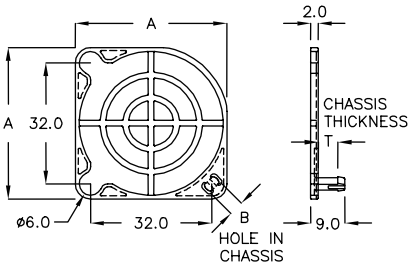

风扇罩 FAN COVER 13-13-1

- MATERIAL: PC(UL)
- FLAME CLASS: 94V-0
- COLOR: BLACK

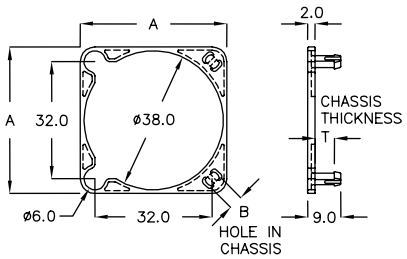

PART NO	A	B HOLE IN CHASSIS	T CHASSIS THICKNESS	PACKAGE
NBT-40	40.0	ø3.5	5.0	100

风扇罩 FAN COVER 13-13-2

- MATERIAL: ABS+PC(UL)
- FLAME CLASS: 94V-0
- COLOR: BLACK

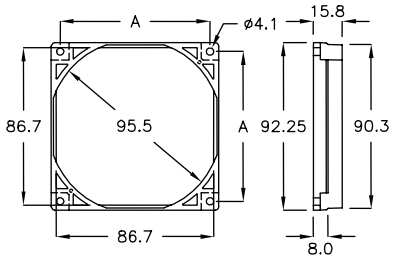

PART NO	A	PACKAGE
NBC-01	82.5	20

风扇罩 FAN COVER 13-13-3

- MATERIAL: PBT(UL)
- FLAME CLASS: 94V-0
- COLOR: BLACK

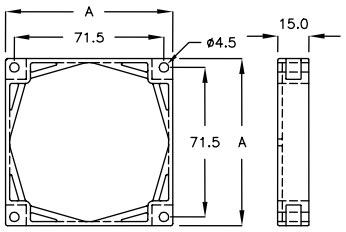

PART NO	A	PACKAGE
NBC-80	80.0	20

电线固定座 WIRE MOUNT 13-13-4

- MATERIAL: NYLON 66(UL)
- FLAME CLASS: 94V-0/94V-2
- COLOR: BLACK

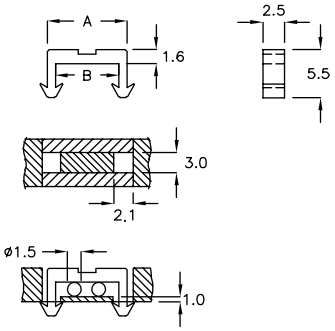

PART NO	A	B	PACKAGE
FBA-7A	9.1	7.25	1000

电线固定座 MOUNT 13-13-5

- MATERIAL: NYLON 66(UL)
- FLAME CLASS: 94V-0/94V-2
- COLOR: NATURAL

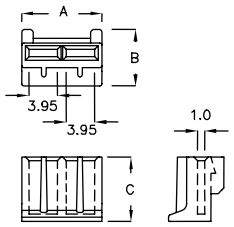

PART NO	A	B	C	PACKAGE
HFC-01	11.1	7.7	8.8	500

固定座 HOUSING 13-14-1

- MATERIAL: NYLON 66(UL)
- FLAME CLASS: 94V-0/94V-2
- COLOR: NATURAL

PART NO	A	B	PACKAGE
PH-5	20.2	3.2	500

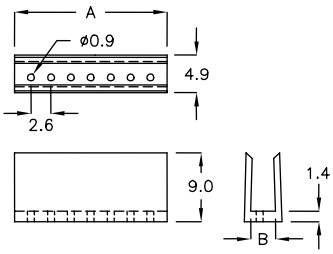

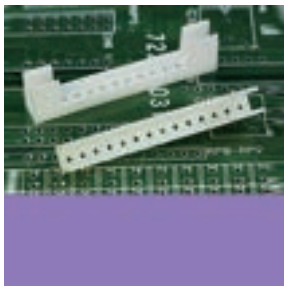

固定座 HOUSING 13-14-2

- MATERIAL: NYLON 66(UL)
- FLAME CLASS:94V-0/94V-2
- COLOR: NATURAL

PART NO	A	B	PACKAGE
PH-6	36.0	3.4	500

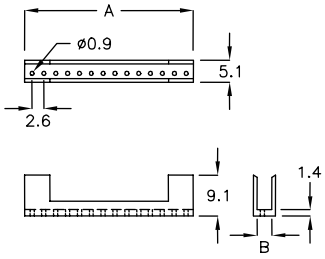

防震座 ANTI-SHOCK HOUSING 13-14-3

- MATERIAL: NYLON 66(UL)
- FLAME CLASS: 94V-0/94V-2
- COLOR: NATURAL

PART NO	A	B	C	PACKAGE
CQ-010	ø3.0	1.6	10.5	1000
CQ-008	ø3.0	1.6	8.0	
CQ-10NR	ø2.0	1.6	10.5	

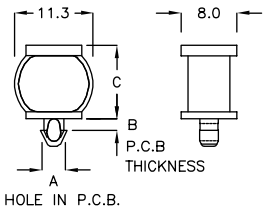

防震座 ANTI-SHOCK HOUSING 13-14-4

- MATERIAL: NYLON 66(UL)
- FLAME CLASS: 94V-0/94V-2
- COLOR: NATURAL

PART NO	A	B	C	PACKAGE
CQ-015	ø3.5	1.2	15.0	1000
CQ-15A	ø4.0	1.6	15.0	
CQ-15C	ø3.5	1.4	15.0	
CQ-15D	ø4.0	1.7	15.0	
CQ-017	ø3.5	1.2	17.0	

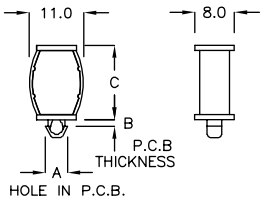

防震座 ANTI-SHOCK HOUSING 13-14-5

- MATERIAL: NYLON 66(UL)
- FLAME CLASS: 94V-0/94V-2
- COLOR: NATURAL

PART NO	A	B	C	PACKAGE
CQ-08A	ø3.0	1.1~1.6	8.05	1000

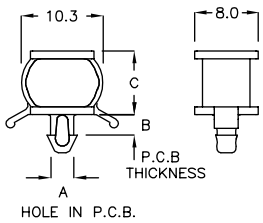

固定夹 CLIP 13-15-1

- MATERIAL: POM(UL)
- FLAME CLASS: 94HB
- COLOR: BLACK

PART NO	A	B	C	PACKAGE
HP-6	8.0	22.0	7.0	1000

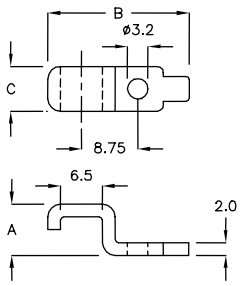

CCD 座 CCD HOUSING 13-15-2

- MATERIAL: NYLON 66(UL)
- FLAME CLASS: 94V-0/94V-2
- COLOR: NATURAL

PART NO	A	B	C	PACKAGE
MDV-01	4.15	17.7	9.6	2000

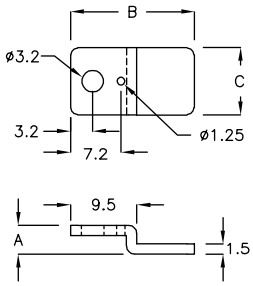

固定座 MOUNT 13-15-3

- MATERIAL: NYLON 66(UL)
- FLAME CLASS: 94V-0/94V-2
- COLOR: BLACK

NEW

	PART NO	A	B	C	PACKAGE
★	MJB-27A	27.35	9.85	12.1	500

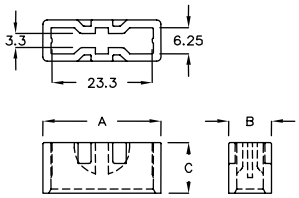

电池端子保护座 CONNECTOR PROTECT HOUSING 13-15-4

- MATERIAL: PC(UL)
- FLAME CLASS: 94V-2
- COLOR: CLEAR
- ADHESIVE TAPE: 3M

PART NO	A	B	C	PACKAGE
MD-16S	11.2	9.0	8.8	500
MD-017	13.5	10.8	10.5	

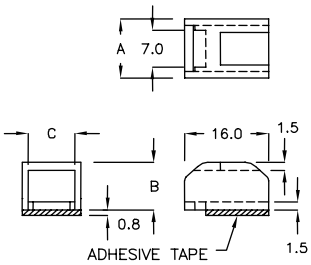

电池端子保护座 CONNECTOR PROTECT HOUSING 13-15-5

- MATERIAL: PC(UL)
- FLAME CLASS: 94V-2
- COLOR: CLEAR
- ADHESIVE TAPE: 3M

PART NO	A	B	C	PACKAGE
MD-16A	11.4	9.0	9.1	500

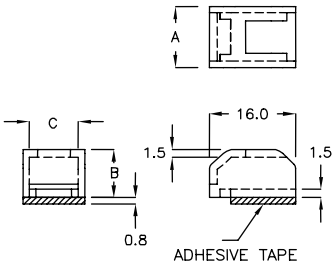

电池端子保护座
CONNECTOR PROTECT HOUSING 13-16-1

- MATERIAL: PC(UL)
- FLAME CLASS: 94V-2
- COLOR: CLEAR
- ADHESIVE TAPE: 3M

PART NO	A	B	C	PACKAGE
MD-020	9.3	7.0	6.9	500

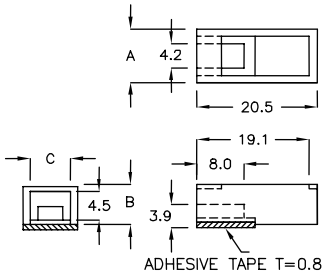

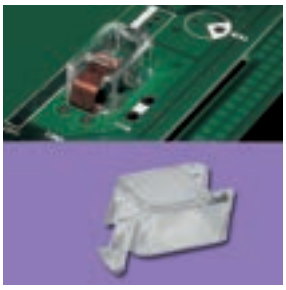

保护盖 HOLE PROTECTOR 13-16-2

- MATERIAL: PC(UL)
- FLAME CLASS: 94V-2
- COLOR: CLEAR

PART NO	A	B	C	PACKAGE
MVA-01	10.2	7.4	6.65	500

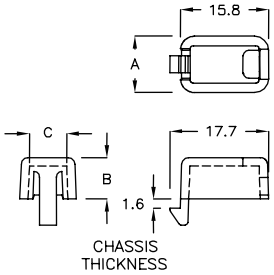

固定座 MOUNT 13-16-3

- MATERIAL: ABS(UL)
- FLAME CLASS: 94V-0
- COLOR: NATURAL

PART NO	A	B	C	D	PACKAGE
MDJ-01	17.0	15.5	14.0	17.5	200
MDJ-02	12.6	11.1	9.6	17.2	500

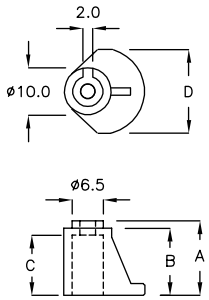

固定座 MOUNT 13-16-4

- MATERIAL: NYLON 66(UL)
- FLAME CLASS: 94V-0/94V-2
- COLOR: NATURAL

PART NO	A	B	C	PACKAGE
MDA-01	10.0	3.0	ø8.0	1000
MDA-02	10.0	1.6	ø8.0	

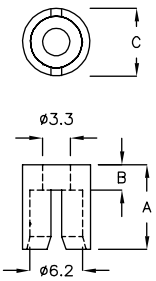

固定座 MOUNT 13-16-5

- MATERIAL: NYLON 66(UL)
- FLAME CLASS: 94V-0/94V-2
- COLOR: NATURAL

PART NO	A	B	C	PACKAGE
MDA-7BC	7.2	1.2	ø7.0	1000

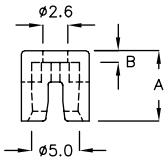

固定座 MOUNT 13-17-1

- MATERIAL: NYLON 66(UL)
- FLAME CLASS: 94V-0/94V-2
- COLOR: NATURAL

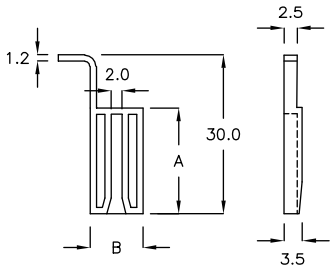

PART NO	A	B	PACKAGE
MDB-01	20.0	10.0	1000

固定座 MOUNT 13-17-2

- MATERIAL: NYLON 66(UL)
- FLAME CLASS: 94V-0/94V-2
- COLOR: NATURAL

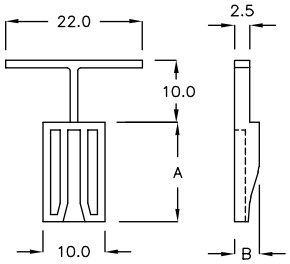

PART NO	A	B	PACKAGE
MDB-02	20.0	4.0	500
MDB-04	16.0	4.0	
MDB-05	15.0	3.2	1000

固定座 MOUNT 13-17-3

- MATERIAL: NYLON 66(UL)
- FLAME CLASS: 94V-0/94V-2
- COLOR: BLACK

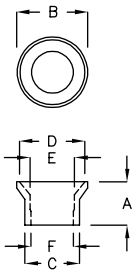

PART NO	A	B	C	D	E	F	PACKAGE
UW-1	7.0	ø11.5	ø8.8	ø10.5	ø7.2	ø6.8	1000
UW-1K	6.6	ø11.0	ø7.5	ø10.0	ø5.45	ø5.05	
UW-1Y	6.6	ø8.8	ø7.55	ø7.8	ø5.45	ø5.05	2000

固定座 MOUNT 13-17-4

- MATERIAL: NYLON 66(UL)
- FLAME CLASS: 94V-0/94V-2
- COLOR: BLACK

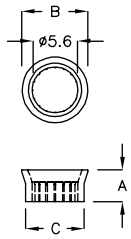

PART NO	A	B	C	PACKAGE
UW-6F	4.0	ø8.4	ø7.4	1000

固定座 MOUNT 13-17-5

- MATERIAL: NYLON 66(UL)
- FLAME CLASS: 94V-0/94V-2
- COLOR: BLACK

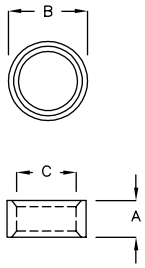

PART NO	A	B	C	PACKAGE
UW-1S	4.2	ø9.1	ø6.85	1000
UW-01C	6.35	ø5.8	ø4.8	
UW-01M	4.3	ø9.2	ø6.7	
UW-01J	6.7	ø11.2	ø7.2	
UW-4TM	4.35	ø6.2	ø5.0	2000
UW-8MK	8.0	ø7.0	ø5.4	1000

固定座 MOUNT 13-18-1

- MATERIAL: NYLON 66(UL)
- FLAME CLASS: 94V-0/94V-2
- COLOR: BLACK

PART NO	A	B	PACKAGE
UW-01A	4.8	ø9.1	1000

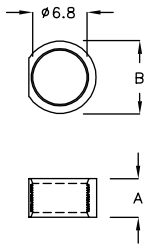

固定座 MOUNT 13-18-2

- MATERIAL: NYLON 66(UL)
- FLAME CLASS: 94V-0/94V-2
- COLOR: BLACK

PART NO	A	øB	øC	PACKAGE
UW-01D	3.0	6.1	4.5	1000
UW-02A	4.2	9.2	7.1	
UW-04A	5.0	9.2	6.4	
UW-08A	8.2	9.0	7.0	
UW-8CD	8.2	9.0	6.8	

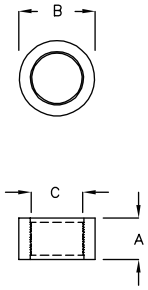

固定座 MOUNT 13-18-3

- MATERIAL: NYLON 66(UL)
- FLAME CLASS: 94V-0/94V-2
- COLOR: BLACK

PART NO	A	B	PACKAGE
UW-01G	3.0	ø7.0	1000

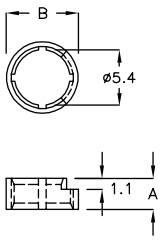

固定座 MOUNT 13-18-4

- MATERIAL: NYLON 66(UL)
- FLAME CLASS: 94V-0/94V-2
- COLOR: BLACK

PART NO	A	B	PACKAGE
MTH-05	3.9	10.3	1000

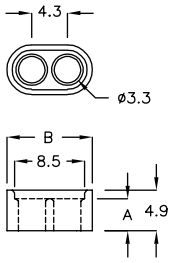

固定座 MOUNT 13-18-5

- MATERIAL: NYLON 66(UL)
- FLAME CLASS: 94V-0/94V-2
- COLOR: BLACK

PART NO	A	B	PACKAGE
MTN-3H	4.15	4.45	2000

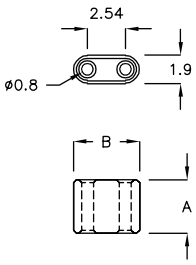

固定座 MOUNT 13-19-1

- MATERIAL: NYLON 66(UL)
- FLAME CLASS: 94V-0/94V-2
- COLOR: NATURAL

PART NO	A	B	C	PACKAGE
MTJ-02	2.0	2.0	ø0.8	2000
MTJ-3A	1.55	2.54	ø0.8	
MTJ-3HD	3.5	2.0	ø0.7	

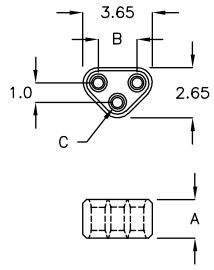

固定座 MOUNT 13-19-2

- MATERIAL: NYLON 66(UL)
- FLAME CLASS: 94V-0/94V-2
- COLOR: NATURAL

PART NO	A	B	C	D	PACKAGE
MDK-01	12.8	1.15	9.5	17.6	500
MDK-03	12.8	1.3	11.0	17.6	
MDK-04	13.0	1.9	10.5	17.6	
MDK-05	10.8	1.5	10.5	15.6	

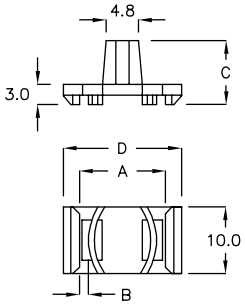

固定座 MOUNT 13-19-3

- MATERIAL: NYLON 66(UL)
- FLAME CLASS: 94V-0/94V-2
- COLOR: NATURAL

PART NO	A	C	PACKAGE
MDK-02	12.8	6.9	1000

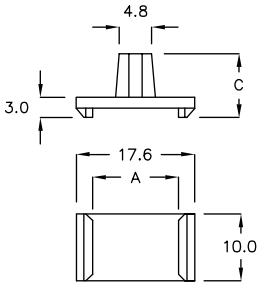

散热片固定座 HEAT SINK MOUNT 13-19-4

- MATERIAL: NYLON 66(UL)
- FLAME CLASS: 94V-0/94V-2
- COLOR: NATURAL

PART NO	A	C CHASSIS THICKNESS	PACKAGE
DAP-1A	5.4	3.0	2000

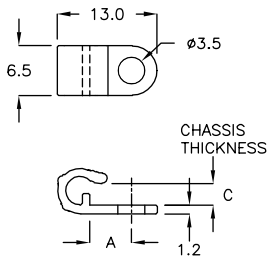

固定座 MOUNT 13-19-5

- MATERIAL: NYLON 66(UL)
- FLAME CLASS: 94V-0/94V-2
- COLOR: NATURAL

PART NO	A	B	C	PACKAGE
DAB-01	19.5	6.0	10.0	500

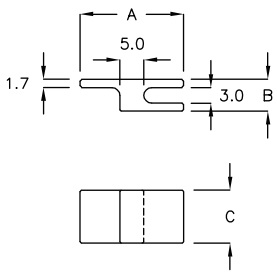

固定座 MOUNT 13-20-1

- MATERIAL: NYLON 66(UL)
- FLAME CLASS: 94V-0/94V-2
- COLOR: NATURAL

PART NO	A	B	C	PACKAGE
DAB−02	17.0	6.6	10.0	500

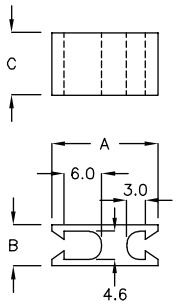

固定座 MOUNT 13-20-2

- MATERIAL: NYLON 66(UL)
- FLAME CLASS: 94V-0/94V-2
- COLOR: NATURAL

PART NO	A	B	C	PACKAGE
DAB−3A	12.0	6.6	10.0	500

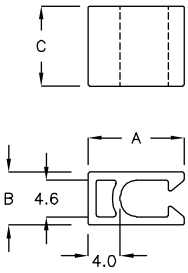

固定座 MOUNT 13-20-3

- MATERIAL: NYLON 66(UL)
- FLAME CLASS: 94V-0/94V-2
- COLOR: NATURAL

NEW

	PART NO	A	B	PACKAGE
★	MAH−6A	8.2	2.9	2000

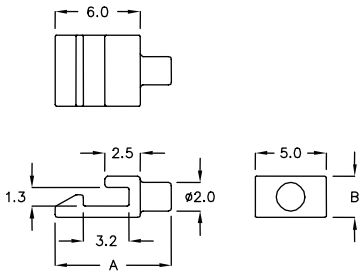

散热片固定座 HEAT SINK MOUNT 13-20-4

- MATERIAL: NYLON 66(UL)
- FLAME CLASS: 94V-0/94V-2
- COLOR: NATURAL

PART NO	A CHASSIS THICKNESS	T P.C.B THICKNESS	PACKAGE
UBA−3A	0.8	1.6	2000

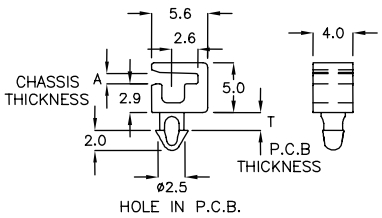

固定座 MOUNT 13-20-5

- MATERIAL: NYLON 66(UL)
- FLAME CLASS: 94V-0/94V-2
- COLOR: BLACK

PART NO	A CHASSIS THICKNESS	T P.C.B THICKNESS	PACKAGE
MTQ−2A	0.8	1.6	2000

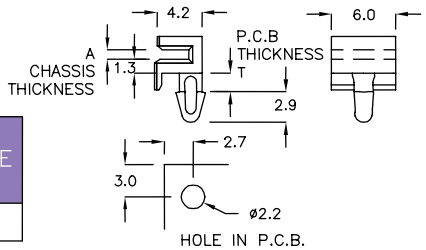

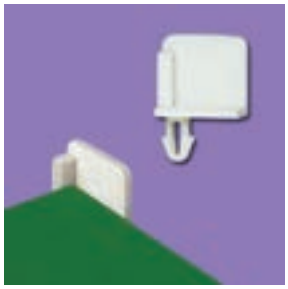

固定座 MOUNT 13-21-1

- MATERIAL: NYLON 66(UL)
- FLAME CLASS: 94V-0/94V-2
- COLOR: NATURAL

PART NO	A	T P.C.B THICKNESS	PACKAGE
MRA-6C	5.2	1.6	2000

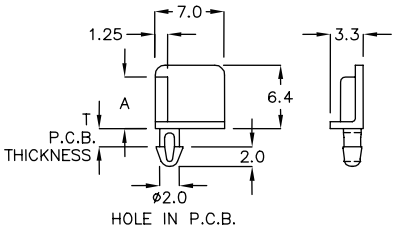

固定座 MOUNT 13-21-2

- MATERIAL: NYLON 66(UL)
- FLAME CLASS: 94V-0/94V-2
- COLOR: BLACK

PART NO	A	T P.C.B THICKNESS	PACKAGE
MFG-21HC	7.4	2.0	200

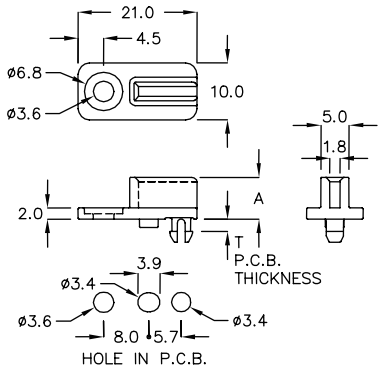

固定座 MOUNT 13-21-3

- MATERIAL: NYLON 66(UL)
- FLAME CLASS: 94V-0/94V-2
- COLOR: BLACK

PART NO	A	T P.C.B. THICKNESS	PACKAGE
MFG-22TK	7.5	1.6	500

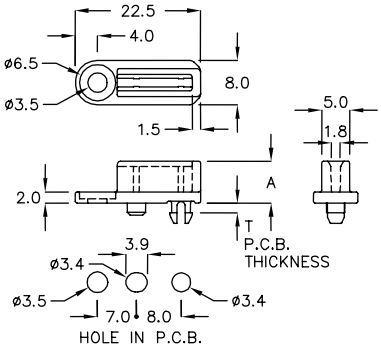

固定座 MOUNT 13-21-4

- MATERIAL: NYLON 66(UL)
- FLAME CLASS: 94V-0/94V-2
- COLOR: BLACK

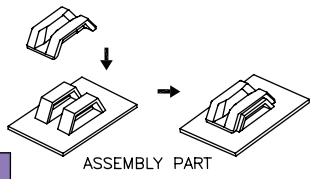

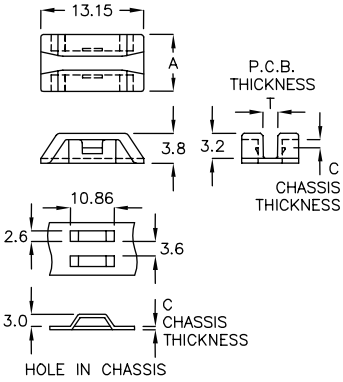

PART NO	A	C CHASSIS THICKNESS	T P.C.B. THICKNESS	PACKAGE
MTB-13A	7.3	0.8	1.6	2000

固定座 MOUNT 13-21-5

- MATERIAL: NYLON 66(UL)
- FLAME CLASS: 94V-0/94V-2
- COLOR: BLACK

PART NO	A	C CHASSIS THICKNESS	T P.C.B. THICKNESS	PACKAGE
MDL-01	2.75	0.8	1.6	2000

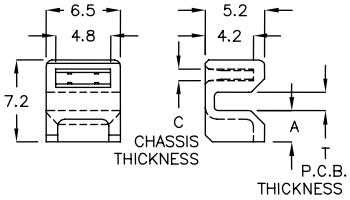

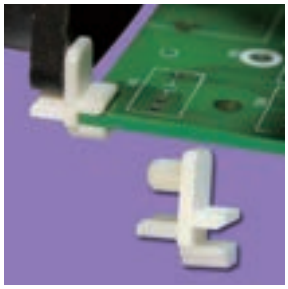

固定座 MOUNT 13-22-1

- MATERIAL: NYLON 66(UL)
- FLAME CLASS: 94V-0/94V-2
- COLOR: NATURAL

PART NO	A	B	T P.C.B. THICKNESS	PACKAGE
MGM−11	11.0	8.3	1.6	500
MGM−11SK	11.0	8.8	1.6	

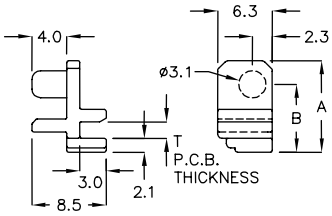

固定座 MOUNT 13-22-2

- MATERIAL: NYLON 66(UL)
- FLAME CLASS: 94V-0/94V-2
- COLOR: BLUE

PART NO	A	PACKAGE
MGMB−28	26.5	500

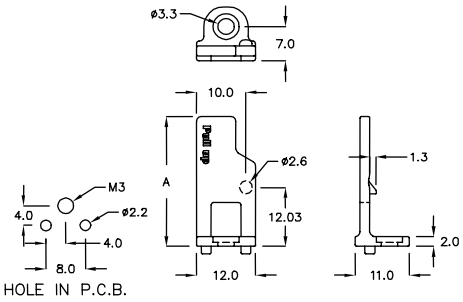

固定座 MOUNT 13-22-3

- MATERIAL: NYLON 66(UL)
- FLAME CLASS: 94V-0/94V-2
- COLOR: BLUE

PART NO	A	PACKAGE
MGMA−30	30.8	500

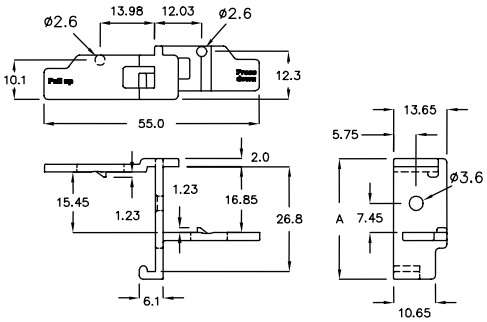

固定座 MOUNT 13-22-4

- FLAME CLASS: 94V-0
- COLOR: BLACK
- MATERIAL: BRASS

PART NO	MATERIAL	A	B	C	D	E	PACKAGE
LCM3−20	ABS	20.0	21.0	10.1	M3	ø7.1	500
LCM5−20	PBT	20.0	26.0	12.5	M5	ø10.0	

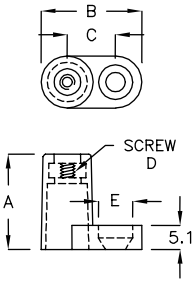

固定座 MOUNT 13-22-5

- MATERIAL: NYLON 66+30%FRP(UL)
- FLAME CLASS: 94V-0
- COLOR: BLACK

PART NO	A	B	C	D	PACKAGE
MGZ−18	16.0	18.0	11.0	ø4.2	500

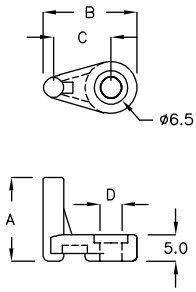

固定座 MOUNT 13-23-1

- MATERIAL: NYLON 66(UL)
- FLAME CLASS: 94V-0/94V-2
- COLOR: NATURAL

PART NO	A	B	C	D	PACKAGE
MWZ-12A	8.15	12.1	6.8	ø4.7	500

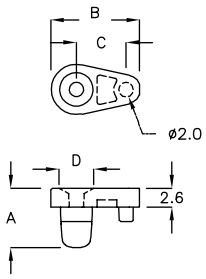

固定座 MOUNT 13-23-2

- MATERIAL: NYLON 66(UL)
- FLAME CLASS: 94V-0/94V-2
- COLOR: BLACK

PART NO	A	B	PACKAGE
MMW-7	6.9	2.0	500

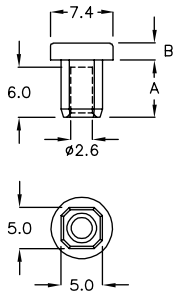

固定座 MOUNT 13-23-3

- MATERIAL: NYLON 66(UL)
- FLAME CLASS: 94V-0/94V-2
- COLOR: BLACK

PART NO	A	B	PACKAGE
MGL-04	4.0	3.8	1000

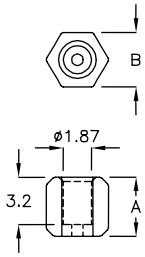

塞环 HOLE PLUG 13-23-4

- MATERIAL: NYLON 66(UL)
- FLAME CLASS: 94V-0/94V-2
- COLOR: NATURAL

PART NO	A	B	T CHASSIS THICKNESS	PACKAGE
MGF-01	8.75	1.5	0.7	500

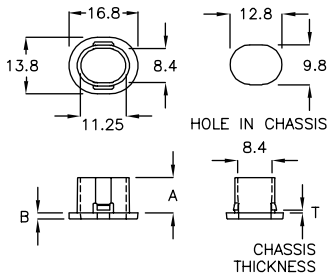

塞环 HOLE PLUG 13-23-5

- MATERIAL: NYLON 66(UL)
- FLAME CLASS: 94V-0/94V-2
- COLOR: NATURAL

PART NO	A	B	T CHASSIS THICKNESS	PACKAGE
MGF-14	7.25	1.5	0.6	500

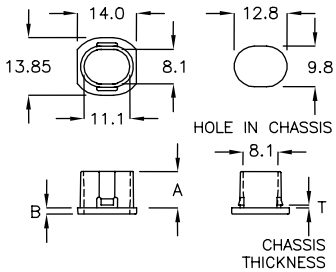

固定座 MOUNT 13-24-1

- MATERIAL: ABS
- FLAME CLASS: 94V-0
- COLOR: NATURAL

PART NO	A	B	T CHASSIS THICKNESS	PACKAGE
PED-01	7.5	3.0	2.2	1000

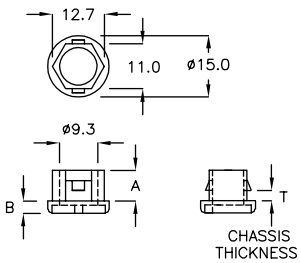

固定座 MOUNT 13-24-2

- MATERIAL: NYLON 66(UL)
- FLAME CLASS: 94V-0/94V-2
- COLOR: NATURAL
- ADHESIVE TAPE: 3M

PART NO	A	PACKAGE
MML-11A	12.4	500

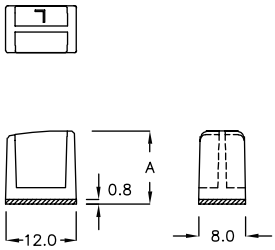

固定座 MOUNT 13-24-3

- MATERIAL: NYLON 66(UL)
- FLAME CLASS: 94V-0/94V-2
- COLOR: NATURAL
- ADHESIVE TAPE: 3M

PART NO	A	PACKAGE
MMR-11A	12.4	500

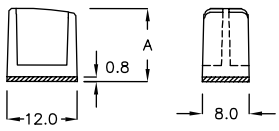

固定座 MOUNT 13-24-4

- MATERIAL: NYLON 66(UL)
- FLAME CLASS: 94V-0/94V-2
- COLOR: BLACK

PART NO	A	B	C	PACKAGE
MWC-05	9.0	5.0	1.6	1000

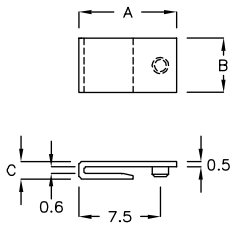

固定座 MOUNT 13-24-5

- MATERIAL: NYLON 66(UL)
- FLAME CLASS: 94V-0/94V-2
- COLOR: NATURAL

PART NO	A	B	PACKAGE
HPA-16K	16.6	3.1	500

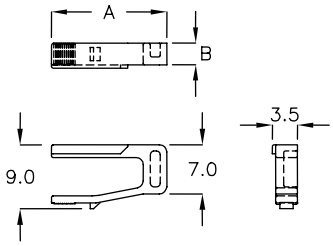

支撑柱 CHIP SUPPORT 13-25-1

- MATERIAL: NYLON 66(UL)
- FLAME CLASS: 94V-0/94V-2
- COLOR: BLACK
- ADHESIVE TAPE: DEXERIALS or EQUIVALENT

PART NO	A	FORM	PACKAGE
DPM-02T	2.5	1	5000
DPM-3AT	2.5	2	

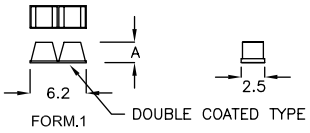

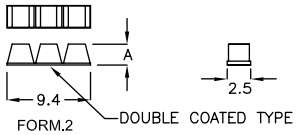

支撑柱 CHIP SUPPORT 13-25-2

- MATERIAL: NYLON 66(UL)
- FLAME CLASS: 94V-0/94V-2
- COLOR: BLACK
- ADHESIVE TAPE: DEXERIALS or EQUIVALENT

PART NO	A	FORM	PACKAGE
DPS-2CK	2.2	1	5000
DPS-3FQ	2.2	2	

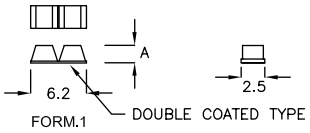

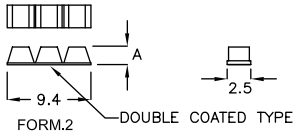

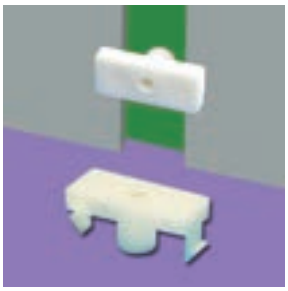

固定座 MOUNT 13-25-3

- MATERIAL: NYLON 66(UL)
- FLAME CLASS: 94V-0/94V-2
- COLOR: NATURAL
- USE M3 TAPPING SCREW

PART NO	A	T CHASSIS THICKNESS	PACKAGE
MGK-18F	18.7	2.0	500

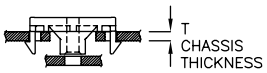

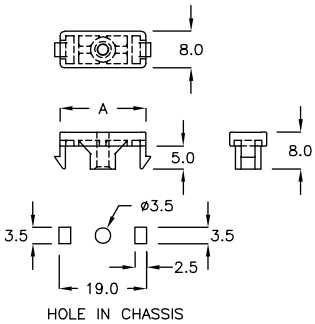

固定座 MOUNT 13-25-4

- MATERIAL: NYLON 66(UL)
- FLAME CLASS: 94V-0/94V-2
- COLOR: BLACK

PART NO	A	B	PACKAGE
MGKH-18	9.4	18.4	500

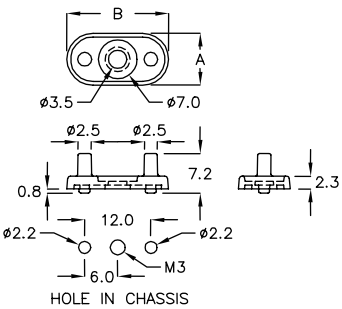

喇叭座 SPEAKER HOUSING 13-25-5

- MATERIAL: POM
- COLOR: WHITE

PART NO	A	B	PACKAGE
SP-2866	28.5	66.0	200

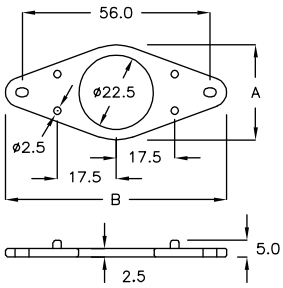

电线固定扣 CABLE CLAMP 13-26-1

- MATERIAL: NYLON 66(UL)
- FLAME CLASS:94V-0/94V-2
- COLOR: NATURAL

PART NO	A	B	PACKAGE
LQC-02	4.2	4.4	500

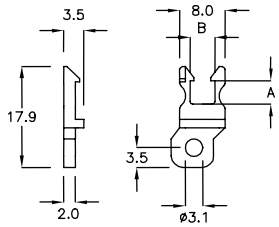

P.C. 板固定扣 P.C.B. HINGE 13-26-2

- MATERIAL: PP
- COLOR: NATURAL

PART NO	A	PACKAGE
BH-5	24.2	1000

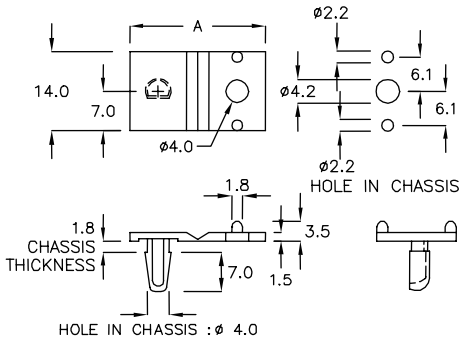

P.C. 板固定扣 P.C.B. HINGE 13-26-3

- MATERIAL: NYLON 66(UL)
- FLAME CLASS: 94V-0/94V-2
- COLOR: NATURAL

PART NO	A	PACKAGE
BH-6	25.3	500

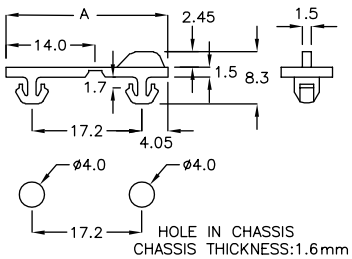

P.C. 板固定扣 P.C.B. HINGE 13-26-4

- MATERIAL: NYLON 66(UL)
- FLAME CLASS: 94V-0/94V-2
- COLOR: NATURAL

PART NO	A	PACKAGE
BH-7	28.0	500

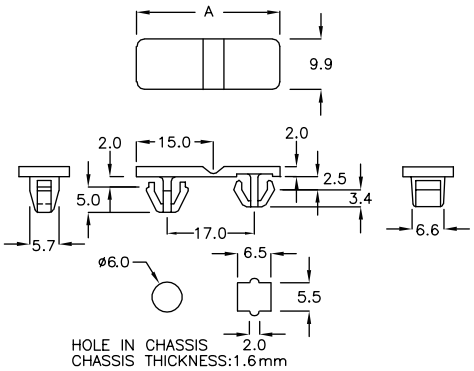

固定扣 CANOE CLIP 13-26-5

- MATERIAL: PC(UL)
- FLAME CLASS: 94V-2
- COLOR: BLACK

PART NO	A	B	C	PACKAGE
DCQ-01	21.9	12.8	7.8	500

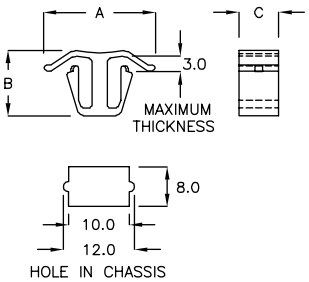

固定座 MOUNT 13-27-1

- MATERIAL: NYLON 66(UL)
- FLAME CLASS: 94V-0/94V-2
- COLOR: BLUE

NEW

PART NO	A	PACKAGE
★ FTHM-22AW	22.5	100

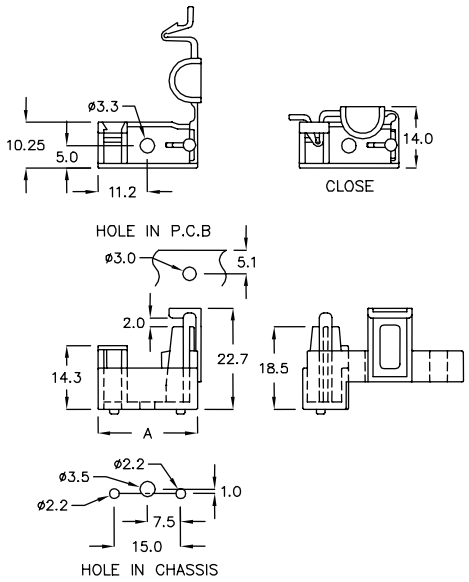

螺丝固定座 WALL INSERT 13-27-2

- MATERIAL: NYLON 66(UL)
- FLAME CLASS: 94V-0/94V-2
- COLOR: BLUE

NEW

PART NO	A	PACKAGE
★ FTHM-24RK	24.9	100

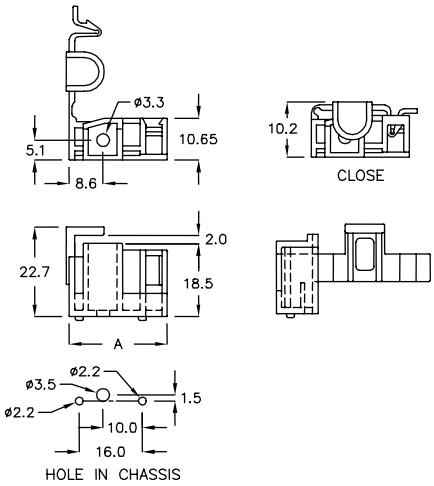

螺丝固定座 WALL INSERT 13-27-3

- MATERIAL: NYLON 66(UL)
- FLAME CLASS: 94V-0/94V-2
- COLOR: NATURAL

PART NO	A	B	C	D	K CHASSIS THICKNESS	L SCREW LENGTH	PACKAGE
MHW-01	18.7	7.9	1.2	3.4	>22.0	12.0	1000
MHW-02	22.0	8.2	1.0	4.6	>25.0	14.0	
MHW-03	22.3	8.0	1.0	3.8	>25.0	14.0	
MHW-04	33.0	8.0	1.0	3.5	>35.0	20.0	

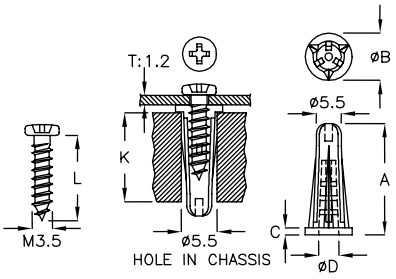

螺丝固定座 WALL INSERT 13-28-1

- MATERIAL: PE
- COLOR: NATURAL

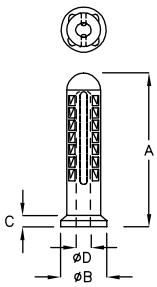

PART NO	A	B	C	D	HOLE IN CHASSIS	CHASSIS THICKNESS	TAPPING SCREW	SCREW LENGTH	PACKAGE
MHM-30	30.0	9.0	2.2	2.9	ø6.7	33.0	M4	12.0	500

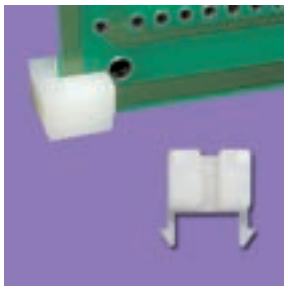

固定座 EDGE CONNECT BASE 13-28-2

- MATERIAL: NYLON 66(UL)
- FLAME CLASS: 94V-0/94V-2
- COLOR: NATURAL

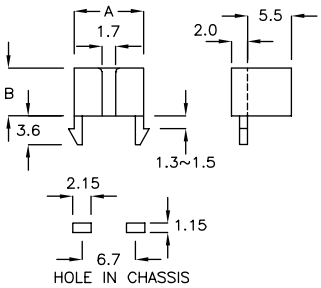

PART NO	A	B	PACKAGE
MH-4	8.7	6.0	1000

固定座 EDGE CONNECT BASE 13-28-3

- MATERIAL: NYLON 66(UL)
- FLAME CLASS: 94V-0/94V-2
- COLOR: NATURAL
- WITH COUNTERSUNK SCREW

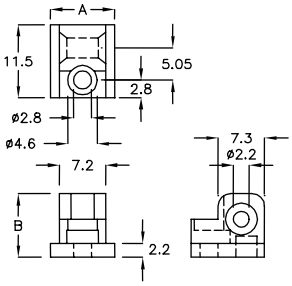

PART NO	A	B	PACKAGE
MH-5	10.0	10.0	1000

固定座 EDGE CONNECT BASE 13-28-4

- MATERIAL: NYLON 66(UL)
- FLAME CLASS: 94V-0/94V-2
- COLOR: NATURAL
- WITH COUNTERSUNK SCREW

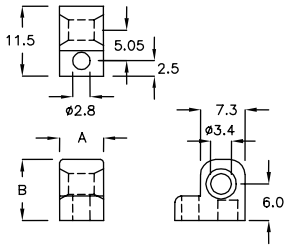

PART NO	A	B	PACKAGE
MH-05C	7.2	10.0	1000

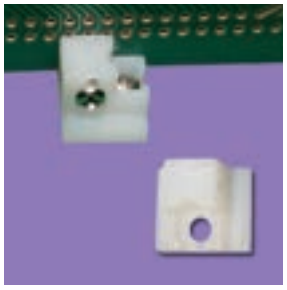

固定座 EDGE CONNECT BASE 13-28-5

- MATERIAL: NYLON 66(UL)
- FLAME CLASS: 94V-0/94V-2
- COLOR: NATURAL

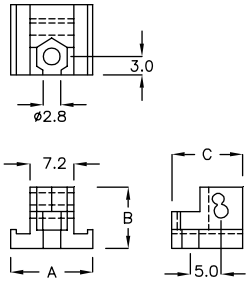

PART NO	A	B	C	PACKAGE
MH-6	13.4	10.0	11.5	500

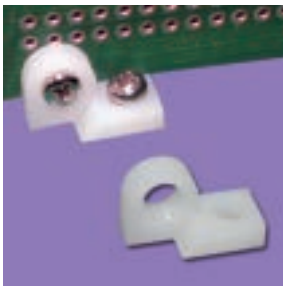

固定座 EDGE CONNECT BASE 13-29-1

- MATERIAL: NYLON 66(UL)
- FLAME CLASS: 94V-0/94V-2
- COLOR: NATURAL

PART NO	A	B	C	D	PACKAGE
MH-6A	14.0	8.75	7.5	6.5	500

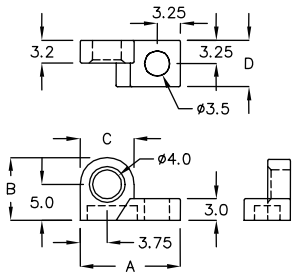

固定座 MOUNT 13-29-2

- MATERIAL: NYLON 66(UL)
- FLAME CLASS: 94V-0/94V-2
- COLOR: BLACK

PART NO	A	B	PACKAGE
MH-13AK	13.8	9.9	500

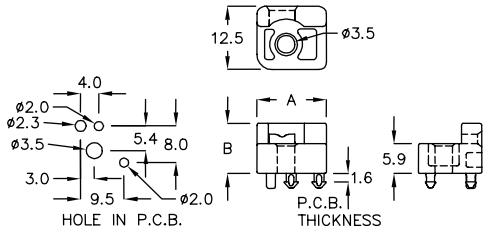

固定座 MOUNT 13-29-3

- MATERIAL: ABS(UL)
- FLAME CLASS: 94HB
- COLOR: NATURAL
- ADHESIVE TAPE: EQUIALENT

PART NO	A	B	PACKAGE
MRN-21KG	21.0	13.9	500

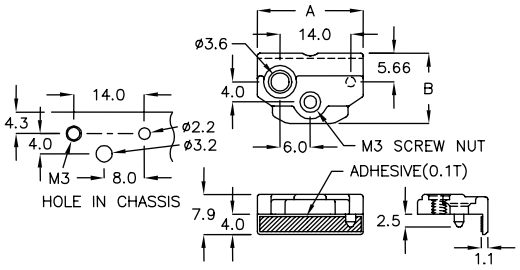

固定座 MOUNT 13-29-4

- MATERIAL: ABS(UL)
- FLAME CLASS: 94HB
- COLOR: BLACK
- ADHESIVE TAPE: EQUIALENT

PART NO	A	B	PACKAGE
MRN-21YL	21.0	13.9	500

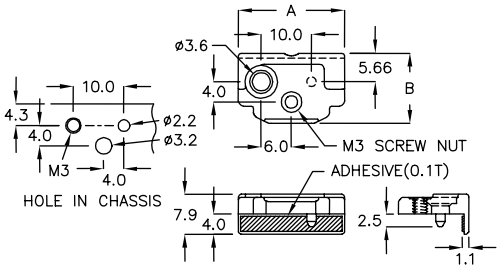

固定座 EDGE CONNECT BASE 13-29-5

- MATERIAL: NYLON 66(UL)
- FLAME CLASS: 94V-0/94V-2
- COLOR: BLACK

PART NO	A	B	C	PACKAGE
MMX-15F	13.0	15.0	9.0	200

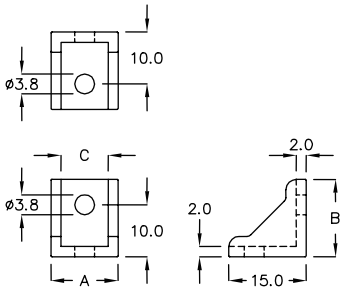

散热片护套 HEAT SINK COVER 13-30-1

- MATERIAL: NYLON 66(UL)
- FLAME CLASS: 94V-0/94V-2
- COLOR: BLACK

PART NO	A	B	C	PACKAGE
HDA-01	38.5	13.3	18.0	200

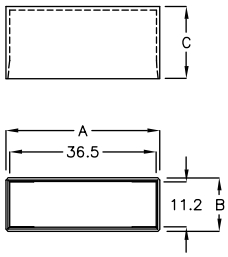

保护盖 INSULATION CAP 13-30-2

- MATERIAL: PP(UL)
- COLOR: BLACK

NEW

	PART NO	A	B	C	PACKAGE
★	HD-12S	ø12.0	ø5.2	4.63	2000

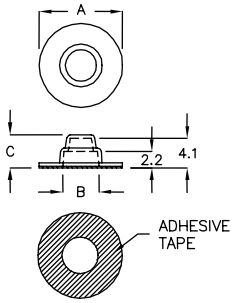

保护罩 INSULATION CAP 13-30-3

- MATERIAL: PP
- COLOR: BLACK

PART NO	A	B	C	D	E	PACKAGE
HD-27MQ	27.0	17.5	20.4	10.9	3.43	1200
HD-34	33.4	19.1	27.3	13.0	2.3	840
HD-35FC	35.3	21.5	28.4	14.9	5.13	840
HD-52	51.7	28.0	44.0	20.0	3.0	450

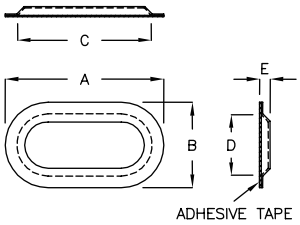

保护罩 INSULATION CAP 13-30-4

- MATERIAL: PP(UL)
- COLOR: BLACK

PART NO	A	B	C	PACKAGE
HD-24C	ø24.0	ø18.0	2.3	990
HD-26	ø26.0	ø19.7	2.3	
HD-31A	ø31.6	ø21.3	2.8	690
HD-31CD	ø31.6	ø21.3	3.2	

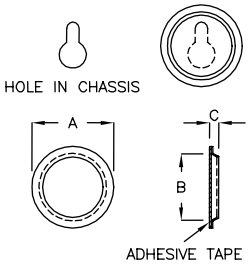

固定座 MOUNT 13-30-5

- MATERIAL: NYLON 66(UL)
- FLAME CLASS: 94V-0/94V-2
- COLOR: BLACK

PART NO	A	B	C	PACKAGE
D-0710	10.8	6.5	7.0	1000

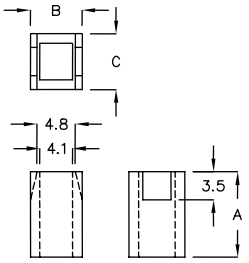

固定座 MOUNT 13-31-1

- MATERIAL: PBT
- FLAME CLASS: 94V-0
- COLOR: NATURAL

PART NO	A	B	C	D	PACKAGE
★ MJC–13	13.9	10.0	7.5	1.45	500
MJC–15	15.5	10.0	7.5	3.0	

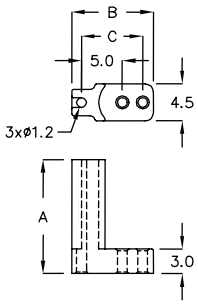

保险丝盒 FUSE BOX 13-31-2

- MATERIAL: NYLON 66(UL)
- FLAME CLASS: 94V-0/94V-2
- COLOR: NATURAL

PART NO	A	B	PACKAGE
MFH–50	48.2	51.0	500

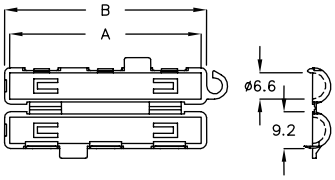

保险丝盖 FUSE COVER 13-31-3

- MATERIAL: PVC
- COLOR: NATURAL

E122477(S)

PART NO	A	B	C	D	E	UL	PACKAGE
FH–1	19.8	22.6	5.6	8.4	11.0	UL	1000
FH–1L	22.0	24.0	6.0	8.0	11.0	UL	
FH–1S	18.0	20.5	5.3	7.8	10.0	UL	
FH–3	31.6	33.6	9.5	12.0	13.0	UL	500
FH–3A	31.0	33.6	8.1	10.5	11.5	UL	
FH–13	12.2	14.2	4.7	6.7	9.0	UL	1000

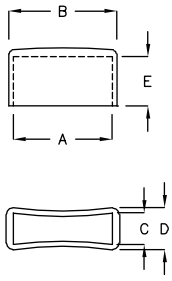

开关延长盖 SWITCH EXTENDING COVER 13-31-4

- MATERIAL: NYLON 66(UL)
- FLAME CLASS: 94V-0/94V-2
- COLOR: BLACK

PART NO	A	B	D	PACKAGE
HSA–01	3.8	3.0	ø3.4	1000

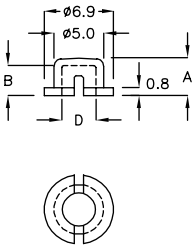

开关延长盖 SWITCH EXTENDING COVER 13-31-5

- MATERIAL: NYLON 66(UL)
- FLAME CLASS: 94V-0/94V-2
- COLOR: BLACK

PART NO	A	B	D	PACKAGE
HS–5A	5.6	1.0	ø9.5	1000

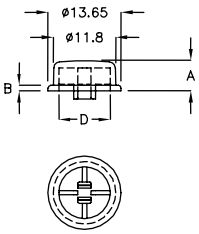

开关延长盖 SWITCH EXTENDING COVER——13-32-1

- MATERIAL: NYLON 66(UL)
- FLAME CLASS: 94V-0/94V-2
- COLOR: BLACK

PART NO	A	B	D	PACKAGE
HS-5K	5.6	1.0	ø9.5	1000

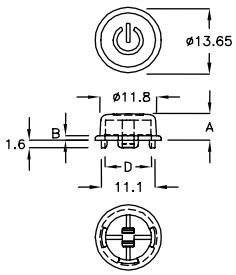

开关延长盖 SWITCH EXTENDING COVER——13-32-2

- MATERIAL: NYLON 66(UL)
- FLAME CLASS: 94V-0/94V-2
- COLOR: NATURAL

PART NO	A	B	C	D	PACKAGE
HS-1	5.5	3.5	4.0	3.2	2000
HS-01A	4.7	3.45	5.25	3.2	
HS-1S	4.7	3.45	5.25	3.3	
HS-2	6.5	4.5	5.0	2.8	
HS-2H	4.4	3.0	5.0	2.7	

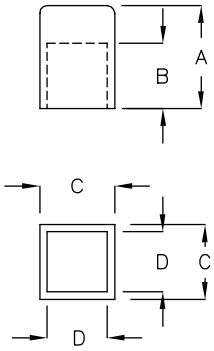

开关延长盖 SWITCH EXTENDING COVER——13-32-3

- MATERIAL: ABS
- FLAME CLASS: 94HB
- COLOR: BLACK

PART NO	A	C	D	PACKAGE
HS-009	8.8	2.0	3.0	2000

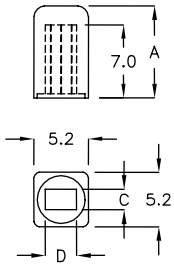

开关延长盖 SWITCH EXTENDING COVER——13-32-4

- MATERIAL: NYLON 66(UL)
- FLAME CLASS: 94V-0/94V-2
- COLOR: BLACK,NATURAL

PART NO	A	C	D	PACKAGE
HS-1C	9.6	2.0	3.0	2000

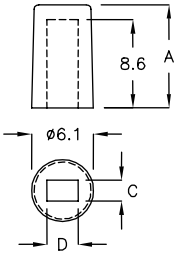

开关延长盖 SWITCH EXTENDING COVER——13-32-5

- MATERIAL: NYLON 66(UL)
- FLAME CLASS: 94V-0/94V-2
- COLOR: BLACK,NATURAL

PART NO	A	C	D	PACKAGE
HS-06C	5.5	1.9	3.0	2000

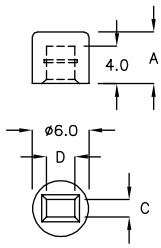

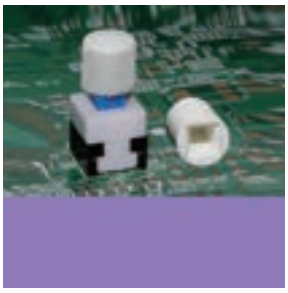

开关延长盖 SWITCH EXTENDING COVER ——— 13-33-1

- MATERIAL: ABS
- FLAME CLASS: 94HB
- COLOR: NATURAL

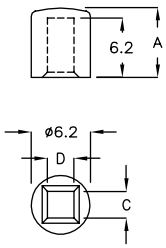

PART NO	A	C	D	PACKAGE
HSQ-7C	7.3	2.8	2.8	2000

开关延长盖 SWITCH EXTENDING COVER ——— 13-33-2

- COLOR: NATURAL,BLACK

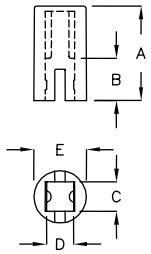

PART NO	MATERIAL	A	B	C	D	E	PACKAGE
HS-09C	ABS V0	9.0	4.0	2.8	2.6	ø5.0	2000
HS-09D	N66 V2	9.0	3.0	2.5	2.15	ø4.6	

开关延长盖 SWITCH EXTENDING COVER ——— 13-33-3

- COLOR: NATURAL,BLACK

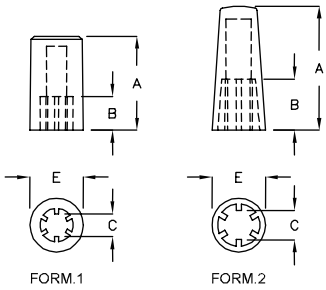

PART NO	MATERIAL	A	B	C	E	FORM	PACKAGE
HS-10C	ABS HB	9.9	4.2	ø3.2	ø8.0	1	1000
HS-12A	ABS HB	12.0	4.2	ø3.3	ø8.0	1	
HS-14A	ABS HB	14.0	4.2	ø3.4	ø8.0	1	
HS-16FA	N66 V2	16.5	7.0	ø3.45	ø6.3	2	
HS-18	N66 V2	18.0	7.0	ø3.45	ø6.3	2	

开关延长盖 SWITCH EXTENDING COVER ——— 13-33-4

- MATERIAL: NYLON 66(UL)
- FLAME CLASS: 94V-0/94V-2
- COLOR: NATURAL,BLACK

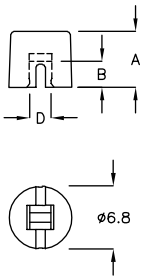

PART NO	A	B	D	PACKAGE
HS-6F	6.0	2.8	2.3	2000
HS-6M	6.5	2.8	2.4	
HS-7K	7.5	2.8	2.4	
HS-8HY	8.0	2.8	2.4	
HS-8MA	8.5	2.8	2.4	

开关延长盖 SWITCH EXTENDING COVER ——— 13-33-5

- MATERIAL: ABS
- FLAME CLASS: 94HB
- COLOR: BLACK

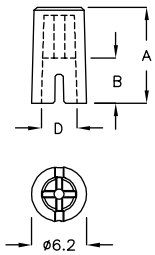

PART NO	A	B	D	PACKAGE
HS-15	9.9	4.55	ø3.7	1000

开关延长盖 SWITCH EXTENDING COVER ——— 13-34-1

- MATERIAL: ABS
- FLAME CLASS: 94HB
- COLOR: WHITE,NATURAL

PART NO	A	B	D	PACKAGE
HS-16	5.5	3.0	2.28	2000

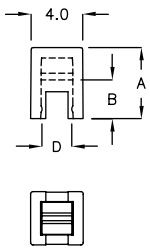

开关延长盖 SWITCH EXTENDING COVER ——— 13-34-2

- MATERIAL: ABS
- FLAME CLASS: 94HB
- COLOR: NATURAL

PART NO	A	B	D	PACKAGE
HSM-5K	5.7	2.8	2.3	2000

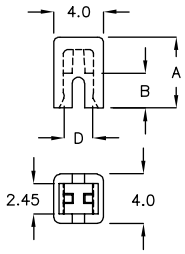

开关延长盖 SWITCH EXTENDING COVER ——— 13-34-3

- MATERIAL: NYLON 66(UL)
- FLAME CLASS: 94V-0/94V-2
- COLOR: NATURAL

PART NO	A	B	PACKAGE
HS-05S	11.8	14.2	1000
HS-5	15.8	14.2	

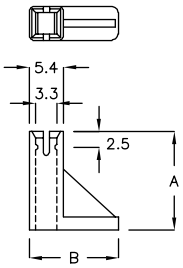

开关延长盖 SWITCH EXTENDING COVER ——— 13-34-4

- MATERIAL: ABS
- FLAME CLASS: 94V-0
- COLOR: GRAY

PART NO	A	B	C	PACKAGE
HS-6	10.2	10.8	12.0	500

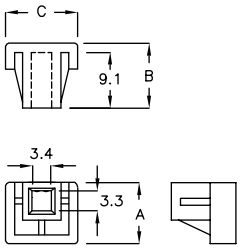

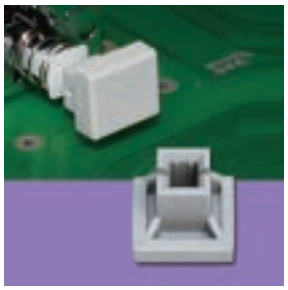

开关延长盖 SWITCH EXTENDING COVER ——— 13-34-5

- MATERIAL: ABS
- FLAME CLASS: 94V-0
- COLOR: GRAY

PART NO	A	B	C	PACKAGE
HS-06A	10.3	10.8	12.2	500

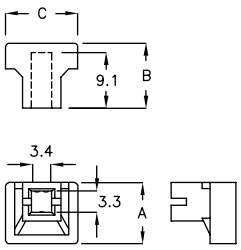

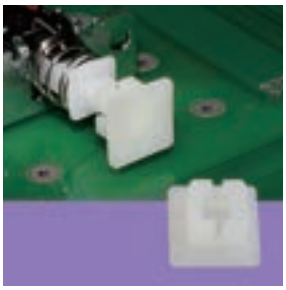

开关延长盖 SWITCH EXTENDING COVER —— 13-35-1

- MATERIAL: NYLON 66(UL)
- FLAME CLASS: 94V-0/94V-2
- COLOR: NATURAL

PART NO	A	B	PACKAGE
HS-007	6.3	1.2	1000

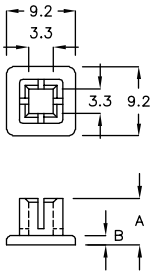

开关延长盖 SWITCH EXTENDING COVER —— 13-35-2

- MATERIAL: NYLON 66(UL)
- FLAME CLASS: 94V-0/94V-2
- COLOR: BLACK

PART NO	A	B	PACKAGE
HS-07A	9.5	2.5	1000

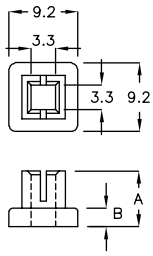

开关延长盖 SWITCH EXTENDING COVER —— 13-35-3

- MATERIAL: NYLON 66(UL)
- FLAME CLASS: 94V-0/94V-2
- COLOR: BLACK

PART NO	A	B	PACKAGE
HS-04	15.5	10.5	1000

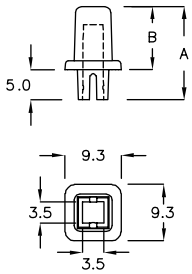

开关延长盖 SWITCH EXTENDING COVER —— 13-35-4

- MATERIAL: NYLON 66(UL)
- FLAME CLASS: 94V-0/94V-2
- COLOR: NATURAL,BLACK

PART NO	A	B	PACKAGE
HS-008	4.0	ø5.5	2000
HS-012	6.3	ø5.5	

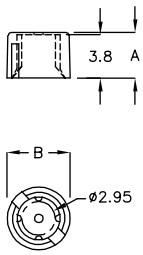

开关延长盖 SWITCH EXTENDING COVER —— 13-35-5

- MATERIAL: NYLON 66(UL)
- FLAME CLASS: 94V-0/94V-2
- COLOR: BLACK

PART NO	A	PACKAGE
HS-4CF	4.0	2000

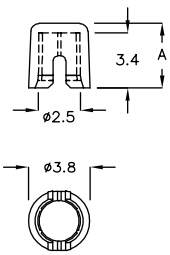

开关延长盖 SWITCH EXTENDING COVER —— 13-36-1

- MATERIAL: ABS+PC(UL)
- FLAME CLASS: 94V-0
- COLOR: BLACK

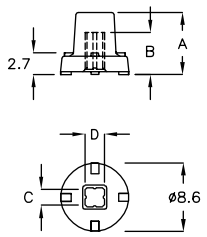

PART NO	A	B	C	D	PACKAGE
HSD-01	7.8	5.3	2.0	2.0	2000

开关延长盖 SWITCH EXTENDING COVER —— 13-36-2

- MATERIAL: NYLON 66(UL)
- FLAME CLASS: 94V-0/94V-2
- COLOR: NATURAL,BLACK

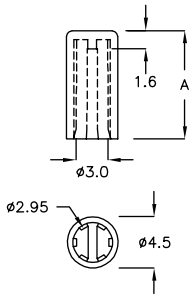

PART NO	A	PACKAGE
DAH-9H	9.5	1000

开关延长盖 SWITCH EXTENDING COVER —— 13-36-3

- MATERIAL: NYLON 66(UL)
- FLAME CLASS: 94V-0/94V-2
- COLOR: BLACK

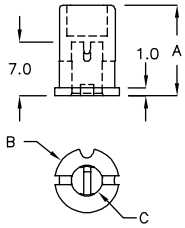

PART NO	A	B	C	PACKAGE
HSL-11A	11.8	ø8.5	ø4.1	1000
HSL-11SP	11.8	ø7.5	ø3.3	

开关延长盖 SWITCH EXTENDING COVER —— 13-36-4

- MATERIAL: NYLON 66(UL)
- FLAME CLASS: 94V-0/94V-2
- COLOR: BLACK

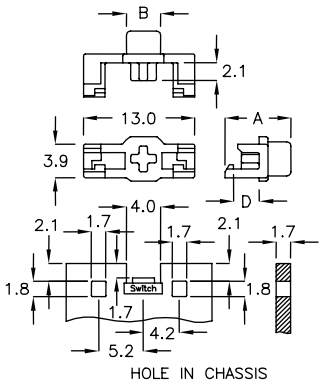

PART NO	A	B	D	PACKAGE
HSW-13FH	7.7	ø4.0	3.0	1000

开关座 PUSH SWITCH HOLDER —— 13-36-5

- MATERIAL: ABS
- FLAME CLASS: 94HB
- COLOR: BLACK

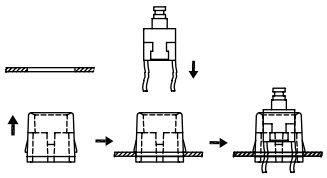

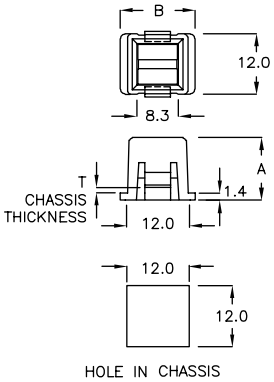

PART NO	A	B	T CHASSIS THICKNESS	PACKAGE
HS-08A	12.4	14.8	0.8	1000

开关座 PUSH SWITCH HOLDER 13-37-1

- MATERIAL: NYLON 66(UL)
- FLAME CLASS: 94V-0/94V-2
- COLOR: BLACK

PART NO	A	B	T CHASSIS THICKNESS	PACKAGE
HS-11	9.2	11.95	0.8	500

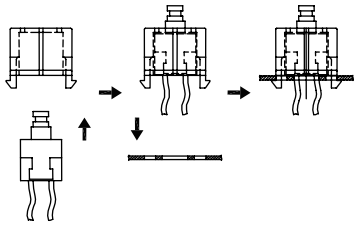

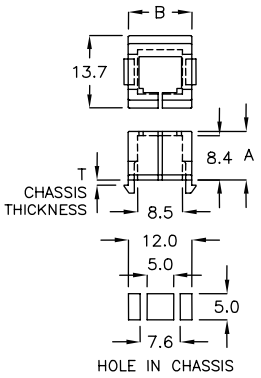

开关座 SWITCH HOLDER 13-37-2

- MATERIAL: NYLON 66(UL)
- FLAME CLASS: 94V-0/94V-2
- COLOR: BLACK

PART NO	A	D	T CHASSIS THICKNESS	PACKAGE
HSF-01	5.8	2.5	0.8	1000

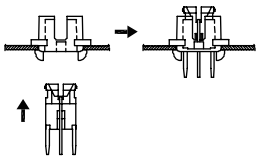

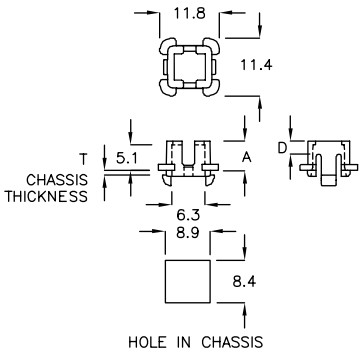

开关座 SWITCH HOLDER 13-37-3

- MATERIAL: NYLON 66(UL)
- FLAME CLASS: 94V-0/94V-2
- COLOR: BLACK

PART NO	A	D	T CHASSIS THICKNESS	PACKAGE
HSF-02	4.5	1.8	0.8	1000
HSF-2KD	4.5	1.8	0.6	

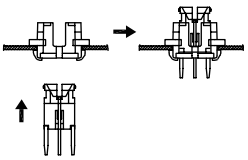

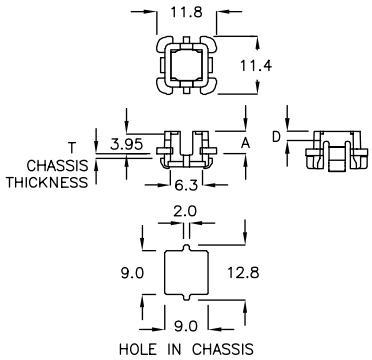

开关座 SWITCH HOLDER 13-37-4

- MATERIAL: NYLON 66(UL)
- FLAME CLASS: 94V-0/94V-2
- COLOR: BLACK

PART NO	A	D	T CHASSIS THICKNESS	PACKAGE
HSF-4WR	4.7	8.05	1.2	1000

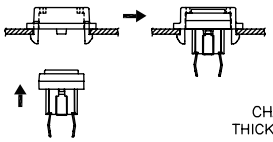

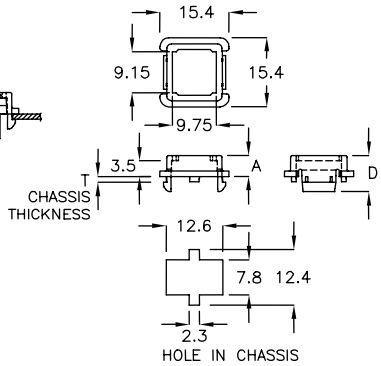

电源开关座 SWITCH COVER 13-38-1

- MATERIAL: NYLON 66(UL)
- FLAME CLASS: 94V-0/94V-2
- COLOR: BLACK

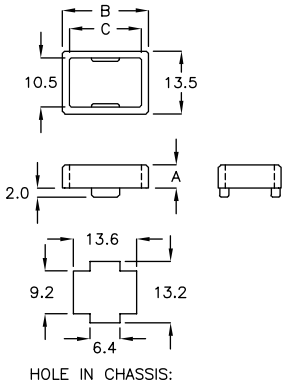

PART NO	A	B	C	PACKAGE
HCA-15D	5.0	18.5	15.5	500

电源开关座 SWITCH COVER 13-38-2

- MATERIAL: ABS
- COLOR: BLACK

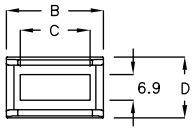

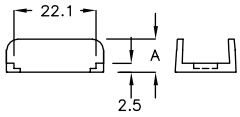

PART NO	A	B	C	D	PACKAGE
HCA-18	9.0	26.1	18.8	16.4	500

电源开关座 SWITCH COVER 13-38-3

- MATERIAL: NYLON 66(UL)
- FLAME CALSS: 94V-0/94V-2
- COLOR: BLACK

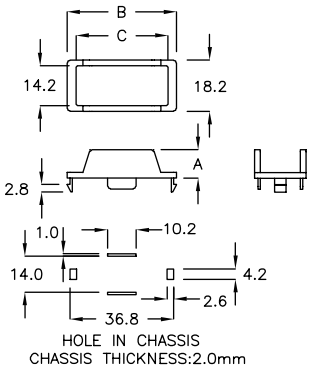

PART NO	A	B	C	PACKAGE
HCA-32	10.0	38.6	32.4	500

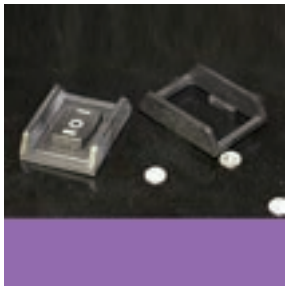

电源开关座 SWITCH COVER 13-38-4

- MATERIAL: NYLON 66(UL)
- FLAME CLASS: 94V-0/94V-2
- COLOR: BLACK

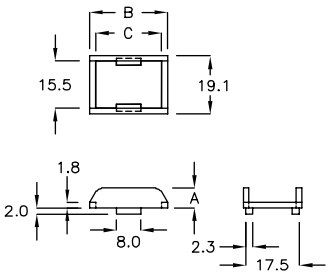

PART NO	A	B	C	PACKAGE
HCA-21K	6.5	25.5	21.5	500

把手盖 EJECTOR COVER 13-39-1

- MATERIAL: ABS+PC
- COLOR: GREEN
- USE M2x6 COUNTERSUNK SCREW

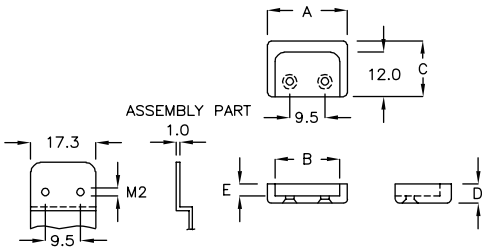

PART NO	A	B	C	D	E	PACKAGE
MHL-21	21.5	17.5	15.0	4.6	2.6	500

把手盖 EJECTOR COVER 13-39-2

- MATERIAL: ABS+PC
- COLOR: GREEN
- USE M2x6 COUNTERSUNK SCREW

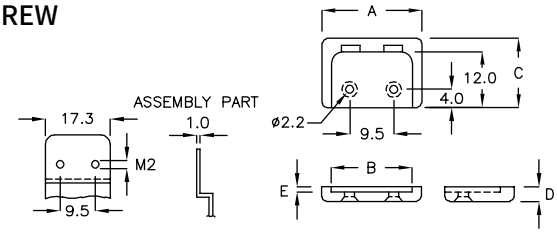

PART NO	A	B	C	D	E	PACKAGE
MHL-03	21.5	17.5	15.0	7.8	5.8	500
MHL-14	21.5	17.5	15.0	3.2	1.2	

把手盖 EJECTOR COVER 13-39-3

- MATERIAL: ABS+PC
- COLOR: GREEN
- USE M2x6 COUNTERSUNK SCREW

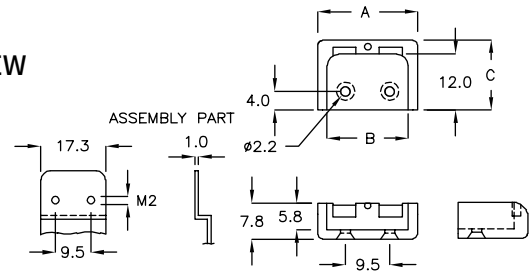

PART NO	A	B	C	PACKAGE
MHL-20	21.5	17.5	15.0	500

把手盖 EJECTOR COVER 13-39-4

- MATERIAL: TPR
- FLAME CLASS: 94V-0
- COLOR: BLACK

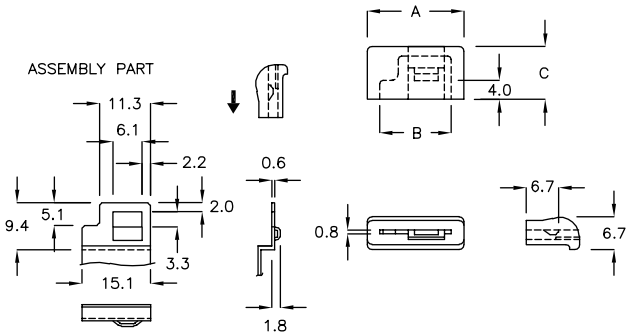

PART NO	A	B	C	PACKAGE
MHL-06	20.0	14.8	11.0	500

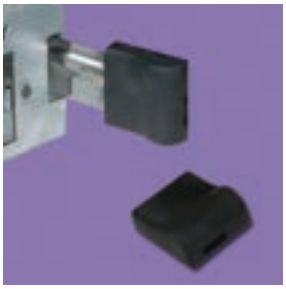

把手盖 EJECTOR COVER 13-40-1

- COLOR: BLACK

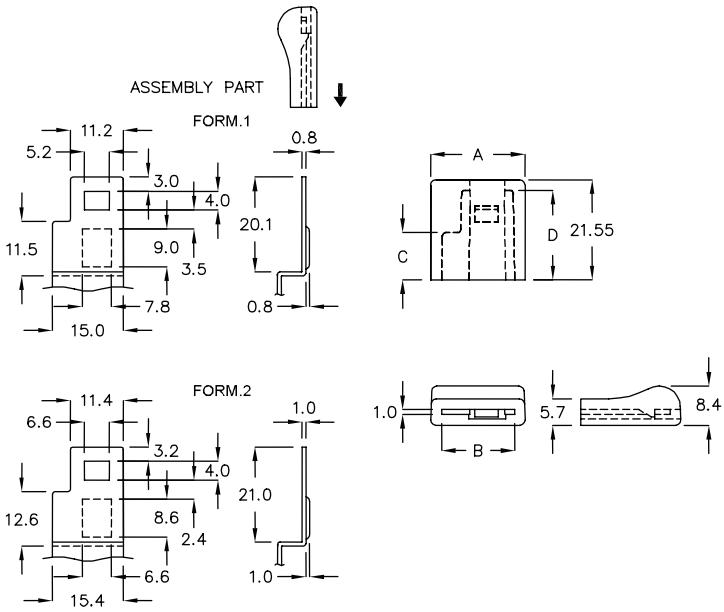

PART NO	MATERIAL	A	B	C	D	FORM	PACKAGE
MHL-05	TPR	20.35	15.75	10.16	19.3	1	500
MHL-5CN	TPR	20.4	15.8	10.16	19.3	2	
MHL-5DM	TPR	20.35	15.4	10.16	19.3	1	
MHL-5FG	TPE	20.34	15.75	10.6	20.5	2	

把手盖 EJECTOR COVER 13-40-2

- MATERIAL: TPR
- COLOR: GREEN

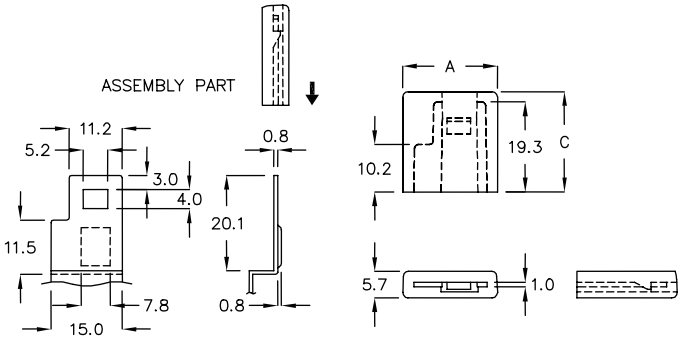

PART NO	A	B	C	PACKAGE
MHL-08	20.3	15.75	21.6	500

把手盖 EJECTOR COVER 13-40-3

- MATERIAL: TPR
- COLOR: ORANGE

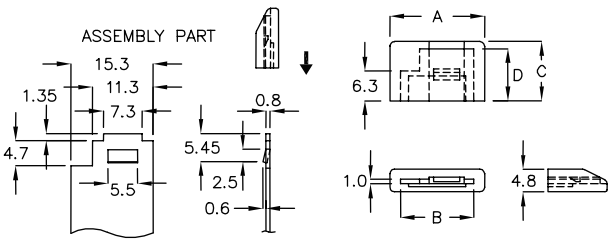

PART NO	A	B	C	D	PACKAGE
MHL-15	20.0	15.5	12.5	11.0	500

把手盖 EJECTOR COVER 13-41-1

- MATERIAL: TPE
- COLOR: ORANGE

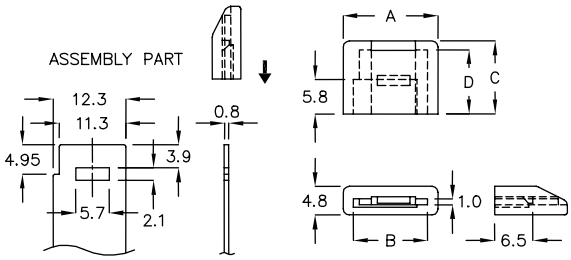

PART NO	A	B	C	D	PACKAGE
MHL-16KM	16.0	12.5	12.3	10.8	500

把手盖 EJECTOR COVER 13-41-2

- MATERIAL: TPR
- COLOR: BLACK

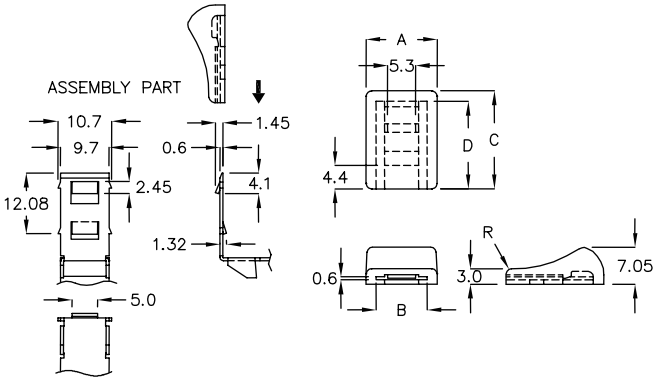

PART NO	A	B	C	D	R	PACKAGE
MHL-04	13.5	9.7	18.6	16.6	1.0	500
MHL-04TC	13.5	9.7	18.6	16.6	0.5	

把手盖 EJECTOR COVER 13-41-3

- MATERIAL: TPR
- COLOR: ORANGE

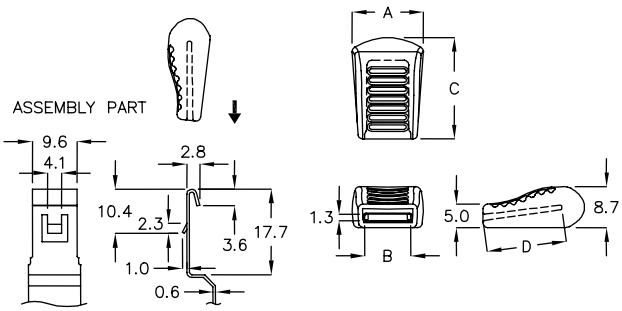

PART NO	A	B	C	D	PACKAGE
MHL-10	15.0	9.9	21.7	17.1	500

把手盖 EJECTOR COVER 13-41-4

- MATERIAL: TPE
- COLOR: BLACK

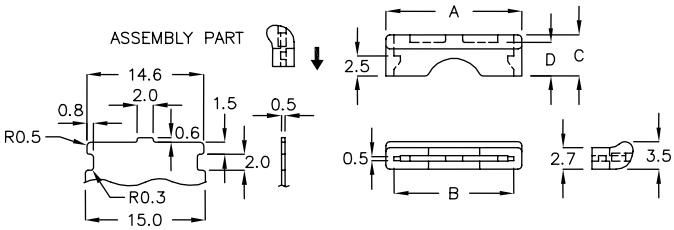

PART NO	A	B	C	D	PACKAGE
MHL-15AP	17.0	15.0	5.15	4.2	500

把手盖 EJECTOR COVER 13-41-5

- MATERIAL: TPR
- COLOR: BLACK

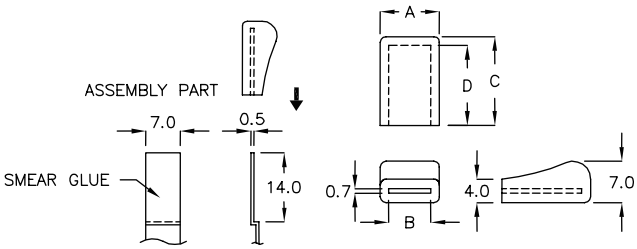

PART NO	A	B	C	D	PACKAGE
MHL-11	10.0	7.1	15.0	13.5	2000

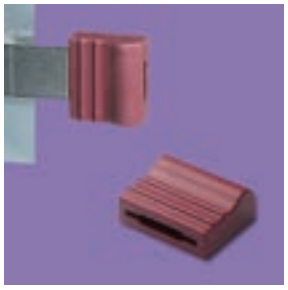

把手盖 EJECTOR COVER 13-42-1

- MATERIAL: TPE
- COLOR: RED

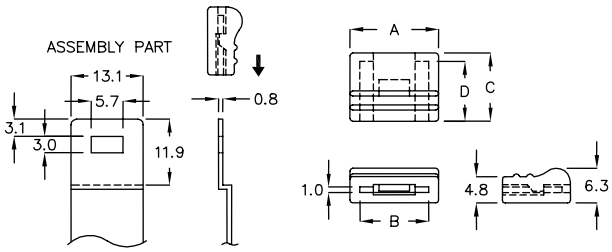

PART NO	A	B	C	D	PACKAGE
MHL-12DC	16.0	12.5	12.3	10.8	500

把手盖 EJECTOR COVER 13-42-2

- MATERIAL: ABS+PC(UL)
- FLAME CLASS: 94V-0
- COLOR: BLACK

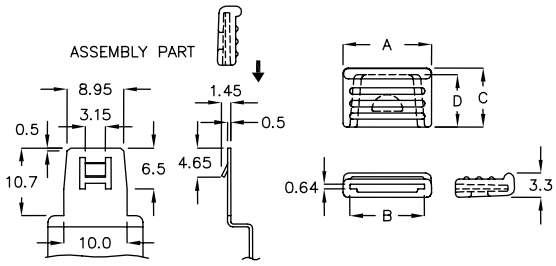

PART NO	A	B	C	D	PACKAGE
MHL-8QM	12.0	9.94	8.0	7.1	500

把手盖 EJECTOR COVER 13-42-3

- MATERIAL: ABS+PC(UL)
- FLAME CLASS: 94V-0
- COLOR: BLUE

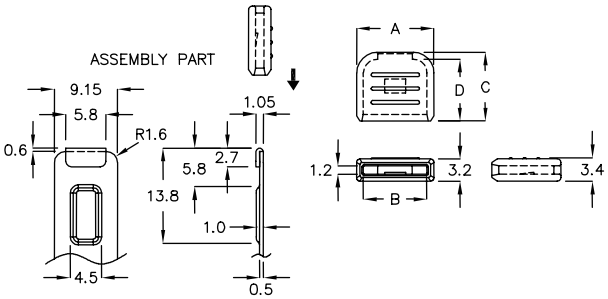

PART NO	A	B	C	D	PACKAGE
MHL-11FT	11.2	9.2	10.0	9.0	1000

把手盖 EJECTOR COVER 13-42-4

- MATERIAL: ABS+PC
- FLAME CLASS: 94V-0
- COLOR: BLACK,RED

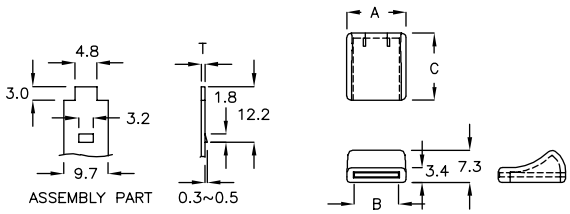

PART NO	A	B	C	T	PACKAGE
MHL-15KD	13.5	10.0	15.2	1.0	1000
MHL-19	13.5	10.0	15.2	0.8	

把手盖 EJECTOR COVER 13-42-5

- MATERIAL: ABS+PC
- FLAME CLASS: 94V-0
- COLOR: GREEN

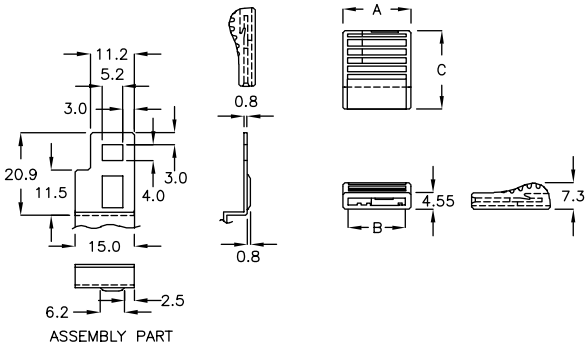

PART NO	A	B	C	PACKAGE
MHL-23	18.7	16.2	21.5	500

把手盖 EJECTOR COVER 13-43-1

- MATERIAL: ABS+PC
- FLAME CLASS: 94V-0
- COLOR: GRAY

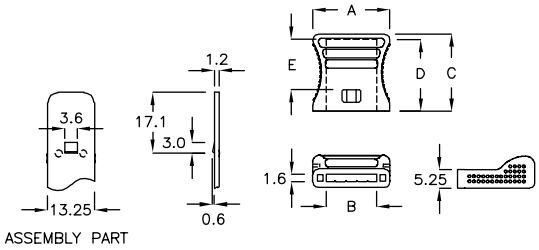

PART NO	A	B	C	D	E	PACKAGE
MHL-21FS	21.6	14.2	21.6	19.8	13.7	500

把手盖 EJECTOR COVER 13-43-2

- MATERIAL: ABS+PC
- FLAME CLASS: 94V-0
- COLOR: BLACK

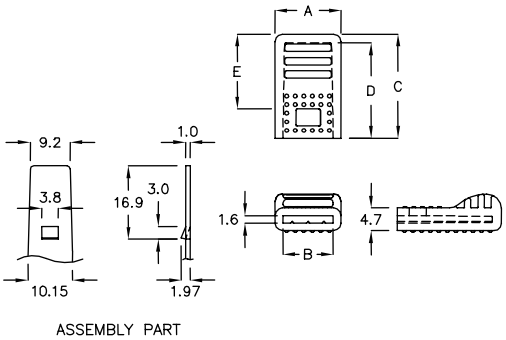

PART NO	A	B	C	D	E	PACKAGE
MHL-21KQ	13.7	10.45	21.6	19.7	13.6	500

把手盖 EJECTOR COVER 13-43-3

- MATERIAL: TPE
- COLOR: BLACK

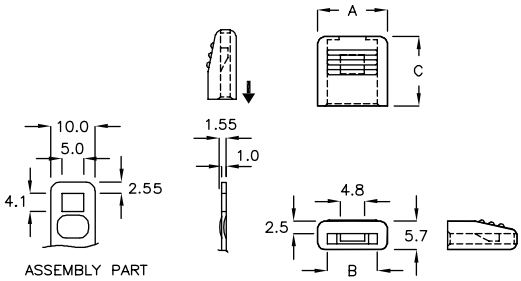

PART NO	A	B	C	PACKAGE
MHL-25	14.0	10.0	13.9	1000

把手盖 EJECTOR COVER 13-43-4

- MATERIAL: ABS+PC
- FLAME CLASS: 94V-0
- COLOR: BLACK

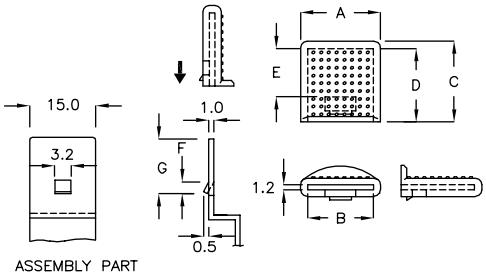

PART NO	A	B	C	D	E	F	G	PACKAGE
MHL-13	18.3	15.1	18.5	16.7	11.2	3.0	14.0	500
MHL-13A	18.3	15.2	18.5	17.2	10.9	3.3	14.5	

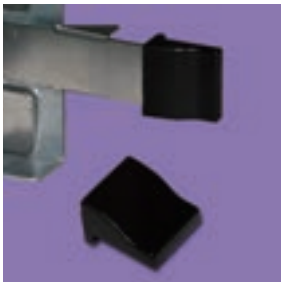

把手盖 EJECTOR COVER 13-44-1

- MATERIAL: NYLON 66(UL)
- FLAME CLASS: 94V-0/94V-2
- COLOR: BLACK

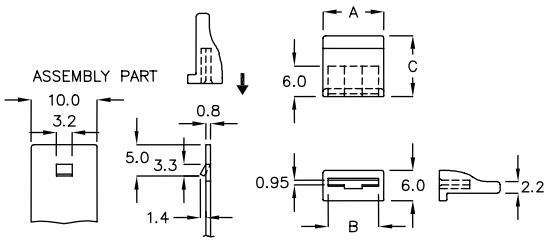

PART NO	A	B	C	PACKAGE
MHL−12	12.0	10.0	12.0	500

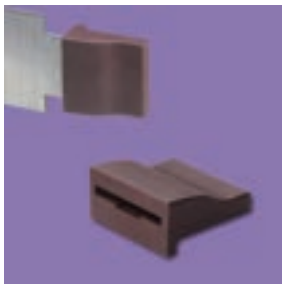

把手盖 EJECTOR COVER 13-44-2

- MATERIAL: NYLON 66(UL)
- FLAME CLASS: 94V-0/94V-2
- COLOR: RED

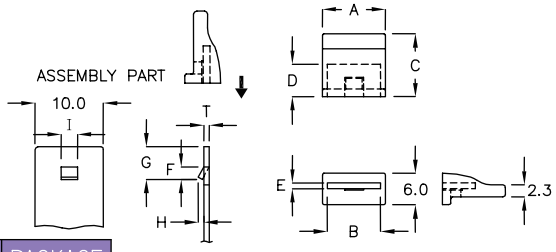

PART NO	A	B	C	D	E	F	G	H	I	T	PACKAGE
MHL−12DT	12.0	10.1	12.0	7.0	0.9	3.3	5.3	2.2	3.2	0.8	500
MHL−12KF	12.0	10.0	12.0	6.2	1.0	2.0	4.6	0.5	2.8	1.0	

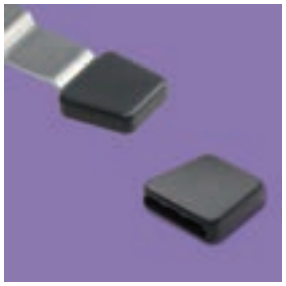

把手盖 EJECTOR COVER 13-44-3

- MATERIAL: ABS+PC(UL)
- COLOR: GRAY

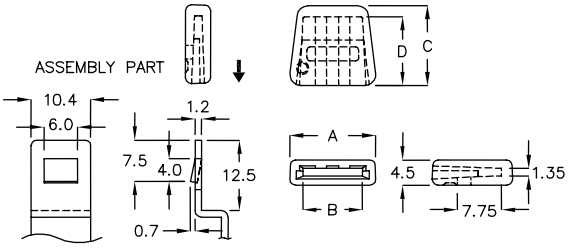

PART NO	A	B	C	D	PACKAGE
MHL−14ST	15.2	10.5	14.2	12.2	500

把手盖 EJECTOR COVER 13-44-4

- MATERIAL: NYLON 66(UL)
- FLAME CLASS: 94V-0/94V-2
- COLOR: BLACK,BLUE

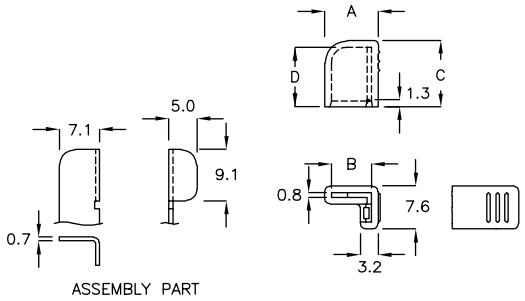

PART NO	A	B	C	D	PACKAGE
MHL−16	9.5	7.1	11.7	10.5	500

把手盖 EJECTOR COVER 13-44-5

- MATERIAL: ABS+PC
- FLAME CLASS: 94V-0
- COLOR: RED

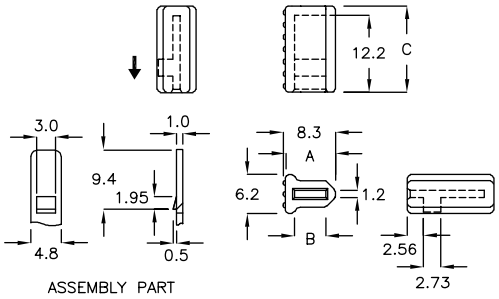

PART NO	A	B	C	PACKAGE
MHL−17	8.0	5.0	13.7	500

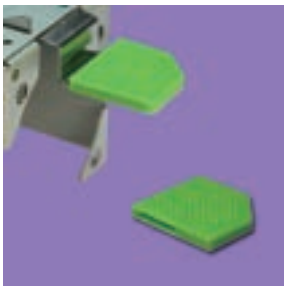

把手盖 EJECTOR COVER 13-45-1

- MATERIAL: ABS+PC(UL)
- COLOR: GREEN,BLUE

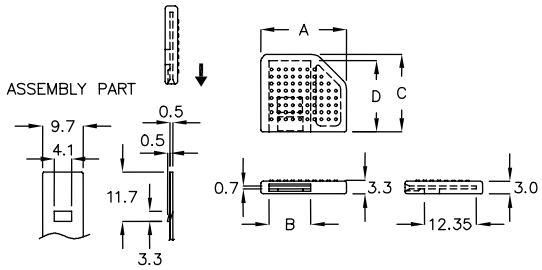

PART NO	A	B	C	D	PACKAGE
MHL-18FR	20.4	9.9	18.5	17.0	500

把手盖 EJECTOR COVER 13-45-2

- MATERIAL: PP(UL)
- FLAME CLASS: 94V-0
- COLOR: GRAY

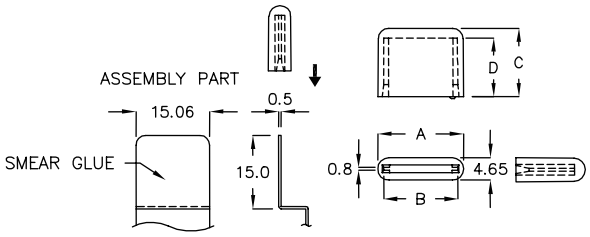

PART NO	A	B	C	D	PACKAGE
MHL-18	17.6	15.0	14.2	12.0	1000

把手盖 EJECTOR COVER 13-45-3

- MATERIAL: ABS+PC(UL)
- COLOR: BLUE

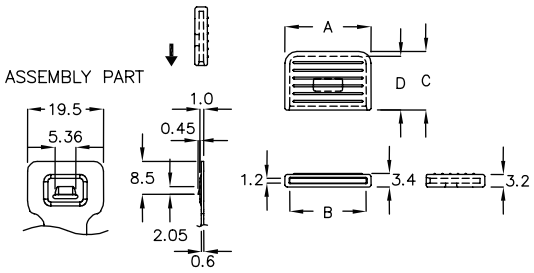

PART NO	A	B	C	D	PACKAGE
MHL-19TD	22.0	19.6	15.0	13.8	1000

把手盖 EJECTOR COVER 13-45-4

- MATERIAL: TPR
- COLOR: BLACK

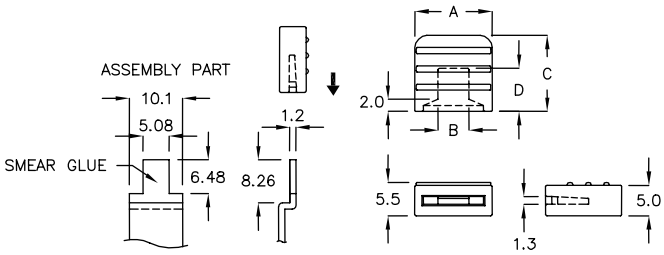

PART NO	A	B	C	D	PACKAGE
MHL-22	12.7	4.8	12.5	7.1	1000

把手盖 EJECTOR COVER 13-45-5

- MATERIAL: NYLON 66(UL)
- FLAME CLASS: 94V-0/94V-2
- COLOR: BLACK

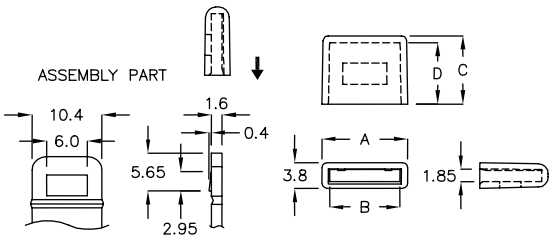

PART NO	A	B	C	D	PACKAGE
MHL-12YW	12.7	10.8	10.15	9.05	500

把手盖 EJECTOR COVER 13-46-1

- MATERIAL: ABS+PC(UL)
- COLOR: RED

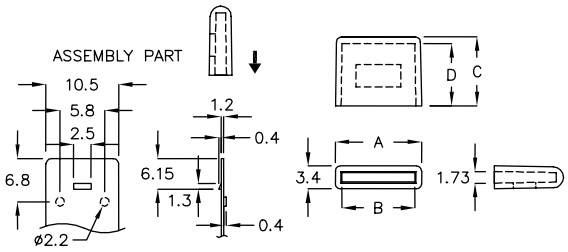

PART NO	A	B	C	D	PACKAGE
MHL-24	12.7	10.7	10.16	9.1	1000

把手盖 EJECTOR COVER 13-46-2

- MATERIAL: ABS+PC
- FLAME CLASS: 94V-0
- COLOR: BLUE

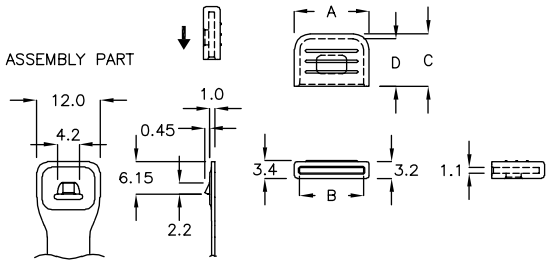

PART NO	A	B	C	D	PACKAGE
MHL-14JP	14.2	12.1	10.0	9.0	500

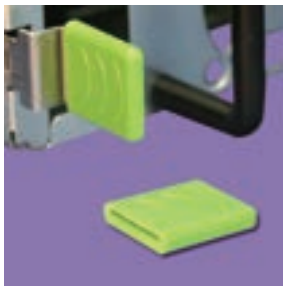

把手盖 EJECTOR COVER 13-46-3

- MATERIAL: ABS+PC
- FLAME CLASS: 94V-0
- COLOR: GREEN,BLACK

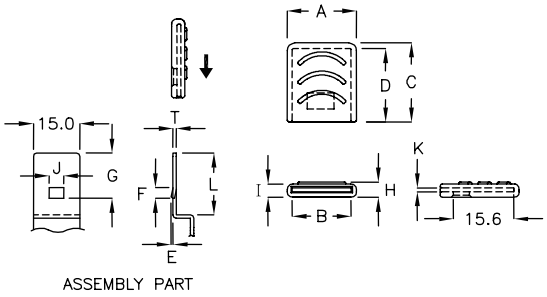

PART NO	A	B	C	D	E	F	G	H	I	J	K	L	T	PACKAGE
MHL-24QM	18.0	15.3	20.5	19.0	0.5	3.5	15.2	4.0	3.7	4.7	1.2	20.1	1.0	500
MHL-24RK	18.0	15.3	20.5	19.0	0.5	3.4	15.4	4.5	4.0	4.1	1.0	20.3	0.8	
MHL-24SY	18.3	15.1	20.7	19.1	0.5	3.4	15.4	4.6	4.1	4.1	1.05	20.3	0.8	
MHL-24TL	18.0	15.3	20.5	19.0	0.7	3.6	15.6	4.7	4.2	3.5	1.2	20.0	1.0	

把手盖 EJECTOR COVER 13-46-4

- MATERIAL: ABS+PC
- FLAME CLASS: 94V-0
- COLOR: GREEN

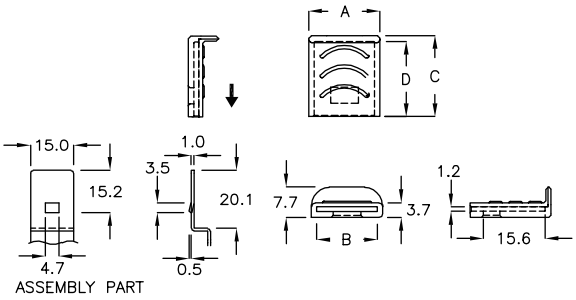

PART NO	A	B	C	D	PACKAGE
MHL-18CL	18.0	15.3	20.5	19.0	500

把手盖 EJECTOR COVER 13-47-1

- MATERIAL: ABS+PC
- FLAME CLASS: 94V-0
- COLOR: BLUE

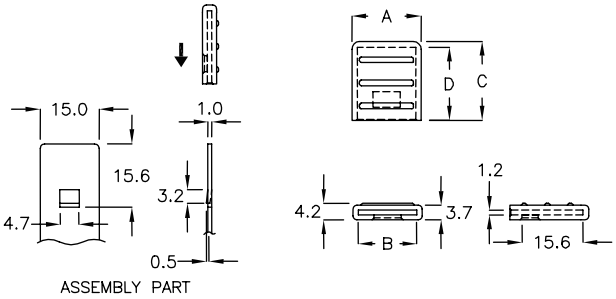

PART NO	A	B	C	D	PACKAGE
MHL-18DF	18.0	15.2	20.5	19.0	500

把手盖 EJECTOR COVER 13-47-2

- MATERIAL: PC(UL)
- COLOR: ORANGE
- USE M2.5 COUNTERSUNK SCREW

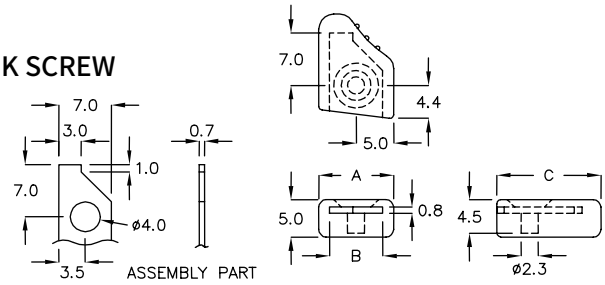

PART NO	A	B	C	PACKAGE
MHL-10KF	10.0	7.1	13.9	500

把手盖 EJECTOR COVER 13-47-3

- MATERIAL: NYLON 66(UL)
- FLAME CLASS: 94V-0/94V-2
- COLOR: BLACK

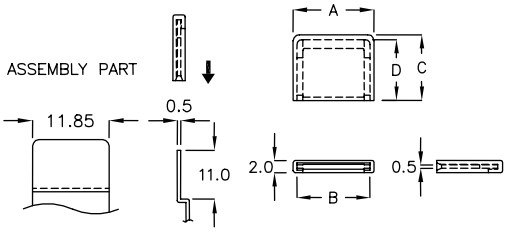

PART NO	A	B	C	D	PACKAGE
MHL-13CK	13.3	12.1	10.85	10.05	1000

把手盖 EJECTOR COVER 13-47-4

- MATERIAL: NYLON 66(UL)
- FLAME CLASS: 94V-0/94V-2
- COLOR: BLUE
- USE M2 TAPPING SCREW

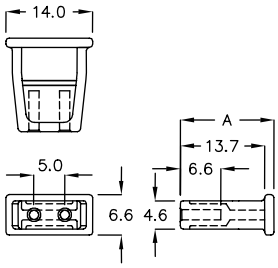

PART NO	A	PACKAGE
MHLF-15A	15.2	500

把手盖 EJECTOR COVER 13-47-5

- MATERIAL: ABS+PC
- FLAME CLASS: 94V-0
- COLOR: GREEN
- MATERIAL: SUS301
- COLOR: NATURAL

铁件为客户提供，我司协助包埋射出
(此为客制品，欢迎提供铁件，我司协助包埋)

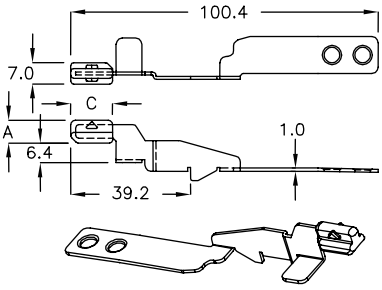

PART NO	A	C	PACKAGE
MHLA-14GP	7.5	13.7	50

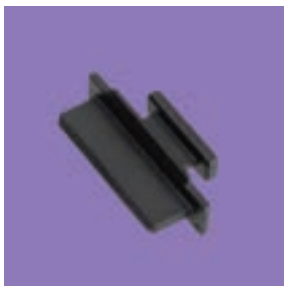

E3.S 防尘盖 E3.S COVER 13-48-1

- MATERIAL: ABS+PC
- COLOR: BLACK

NEW

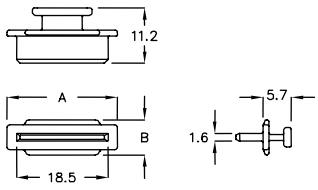

	PART NO	A	B	PACKAGE
★	E3S−22A	22.2	7.1	500

SATA 防尘盖 SATA DUST COVER 13-48-2

- MATERIAL: NYLON 66(UL)
- FLAME CALSS: 94V-0/94V-2
- COLOR: BLACK

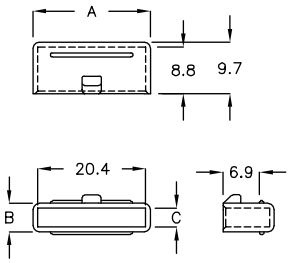

PART NO	A	B	C	PACKAGE
HTD−20A	22.2	5.4	3.6	1000

SATA 防尘盖 SATA DUST COVER 13-48-3

- MATERIAL: NYLON 66(UL)
- FLAME CALSS: 94V-0/94V-2
- COLOR: NATURAL

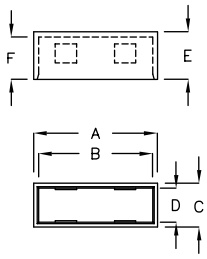

PART NO	A	B	C	D	E	F	PACKAGE
HC−21	23.4	21.6	8.2	6.4	9.0	8.0	500

SATA 防尘盖 SATA DUST COVER 13-48-4

- MATERIAL: NYLON 66(UL)
- FLAME CLASS: 94V-0/94V-2
- COLOR: BLACK

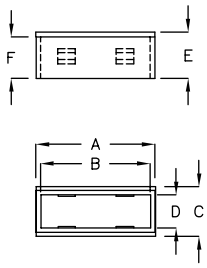

PART NO	A	B	C	D	E	F	PACKAGE
HC−21F	23.9	22.0	10.0	6.6	9.3	8.3	500
HC−21H	23.0	21.1	10.4	6.5	9.1	8.1	

SATA 防尘盖 SATA DUST COVER 13-48-5

- MATERIAL: ABS(UL)
- FLAME CLASS: 94V-0
- COLOR: BLACK

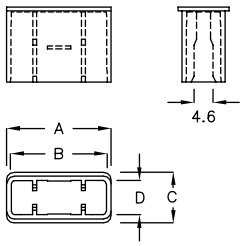

PART NO	A	B	C	D	PACKAGE
HC−27A	26.7	24.7	13.0	8.6	500

SATA 防尘盖 SATA DUST COVER 13-49-1

- MATERIAL: PC(UL)
- FLAME CLASS: 94V-2
- COLOR: BLACK

PART NO	A	B	C	D	PACKAGE
HCQ-22KR	22.5	20.5	12.0	7.0	500

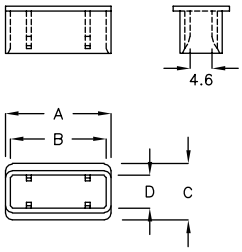

SATA 防尘盖 SATA DUST COVER 13-49-2

- MATERIAL: ABS(UL)
- FLAME CLASS: 94V-0
- COLOR: BLACK

PART NO	A	B	C	D	PACKAGE
HC-27C	26.8	24.4	12.0	8.0	500

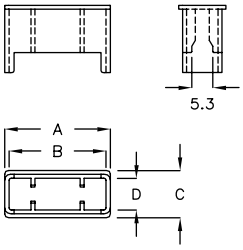

网通光纤接头防尘盖 TRANSPORTER COVER 13-49-3

- MATERIAL: NYLON 66(UL)
- FLAME CLASS: 94V-0/94V-2
- COLOR: BLACK

PART NO	A	B	C	D	PACKAGE
HB-01	9.0	ø15.0	5.5	ø9.8	1000

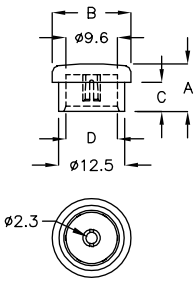

网通光纤接头防尘盖 TRANSPORTER COVER 13-49-4

- MATERIAL: NYLON 66(UL)
- FLAME CLASS: 94V-0/94V-2
- COLOR: BLACK

PART NO	A	B	C	D	PACKAGE
HB-02	9.0	ø15.0	5.5	ø10.7	1000

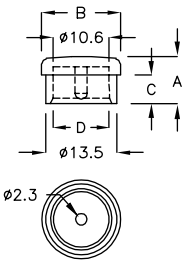

PS/2 防尘盖 PS/2 DUST COVER 13-49-5

- MATERIAL: PP
- COLOR: BLACK

PART NO	A	B	PACKAGE
HB-03	10.4	ø10.5	1000

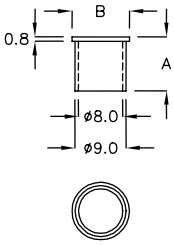

BNC 防尘盖 BNC DUST COVER 13-50-1

- MATERIAL: NYLON 66(UL)
- FLAME CLASS: 94V-0/94V-2
- COLOR: BLACK

PART NO	A	B	PACKAGE
HBK-8D	7.6	ø10.5	500

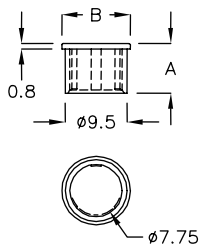

AVI 端子防尘盖 DUST COVER 13-50-2

- MATERIAL: NYLON 66(UL)
- FLAME CLASS: 94V-0/94V-2
- COLOR: BLACK

PART NO	A	B	PACKAGE
AVI-01	6.0	ø10.6	1000

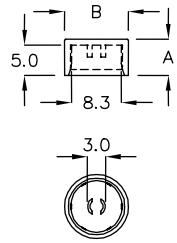

音源孔插头盖 AUDIO SOURCE HOLE COVER 13-50-3

- MATERIAL: NYLON 66(UL)
- FLAME CLASS: 94V-0/94V-2
- COLOR: BLACK

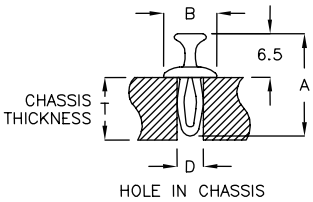

PART NO	A	B	T CHASSIS THICKNESS	D HOLE IN CHASSIS	PACKAGE
MBJ-3A	15.3	ø7.9	>8.8	ø3.6~ø3.65	2000

插头盖 DC COVER 13-50-4

- MATERIAL: NYLON 66(UL)
- FLAME CLASS: 94V-0/94V-2
- COLOR: BLACK

PART NO	A	B	PACKAGE
DCC-5JA	7.9	ø6.9	2000

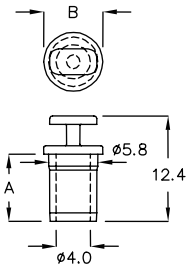

插头盖 DC COVER 13-50-5

- MATERIAL: NYLON 66(UL)
- FLAME CLASS: 94V-0/94V-2
- COLOR: BLACK

PART NO	A	B	PACKAGE
DCJ-5GK	7.9	ø6.9	2000

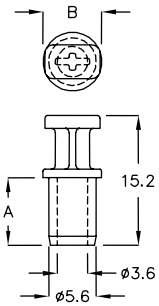

插头盖 DC COVER 13-51-1

- MATERIAL: NYLON 66(UL)
- FLAME CLASS: 94V-0/94V-2
- COLOR: BLACK

PART NO	A	B	PACKAGE
DCC-7AK	10.0	ø9.5	2000

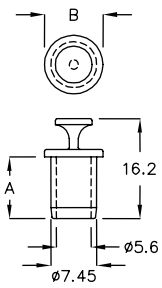

固定座 MOUNT 13-51-2

- MATERIAL: NYLON 66(UL)
- FLAME CLASS: 94V-0/94V-2
- COLOR: BLACK

PART NO	A	B	PACKAGE
DHD-01	12.8	12.0	500

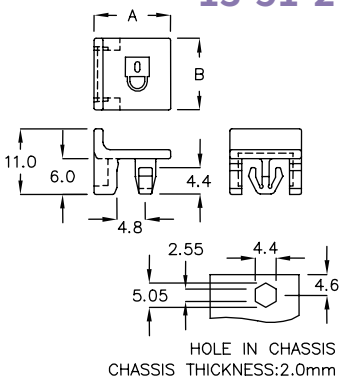

防尘盖 DUST COVER 13-51-3

- COLOR: NATURAL,BLACK

PART NO	MATERIAL	A	B	C	D	PACKAGE
HC-5	N66	ø8.0	5.2	4.7	ø6.5	2000
HC-5S	N66	ø8.0	3.0	2.6	ø6.5	
HC-6	TPE	ø8.0	8.5	7.4	ø6.0	1000
HC-6DP	TPE	ø8.0	5.4	4.3	ø6.0	
HC-8	N66	ø10.7	8.2	6.8	ø8.0	
HC-9	TPE	ø11.0	9.7	8.7	ø9.0	
HC-10	N66	ø12.0	9.2	8.0	ø10.0	

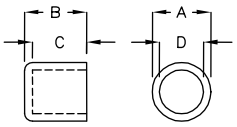

防尘盖 DUST COVER 13-51-4

- MATERIAL: SILICONE
- COLOR: BLACK

PART NO	A	B	B	D	PACKAGE
VCK-5A	ø6.6	8.1	7.1	ø4.8	2000
VCK-7K	ø7.7	12.0	11.5	ø6.7	1000
VCK-8D	ø9.6	12.0	11.5	ø8.6	

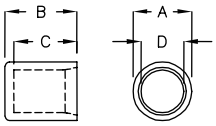

K-LOCK 防尘盖 K-LOCK COVER 13-51-5

- MATERIAL: TPE
- COLOR: BLACK

PART NO	A	B	E	PACKAGE
NEF-9DL	9.3	3.2	7.4	2000
NEF-9WS	9.3	3.0	7.0	

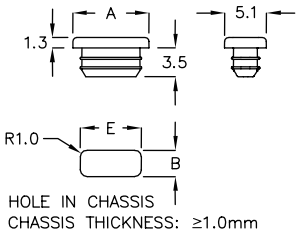

SFP 防尘盖
SFP CONNECTOR COVER — 13-52-1

- MATERIAL: PE
- COLOR: BLACK

PART NO	A	B	C	PACKAGE
NEP-01	14.5	9.0	6.9	500
NEP-1QM	14.0	8.9	6.8	

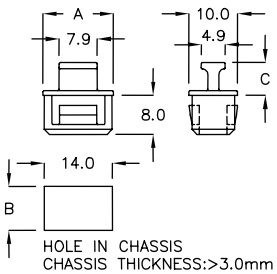

MINI SAS 防尘盖
MINI SAS CONNECTOR COVER — 13-52-2

- MATERIAL: NYLON 66(UL)
- FLAME CLASS: 94V-0/94V-2
- COLOR: BLACK

PART NO	A	C	PACKAGE
NSA-10C	10.85	7.0	500

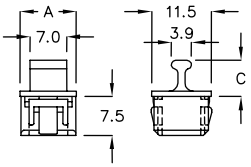

QSFP 防尘盖
QSFP CONNECTOR COVER — 13-52-3

- MATERIAL: NYLON 66(UL)
- FLAME CLASS: 94V-0/94V-2
- COLOR: BLACK

PART NO	A	B	C	PACKAGE
NEC-18	18.6	8.85	7.6	500
NEC-18GD	18.6	8.35	7.6	

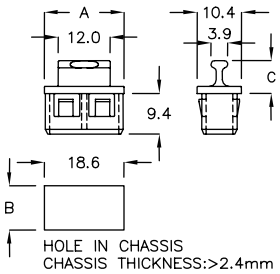

SFP 防尘盖
SFP CONNECTOR COVER — 13-52-4

- MATERIAL: PE
- COLOR: BLACK

PART NO	A	PACKAGE
NEK-14	14.6	500

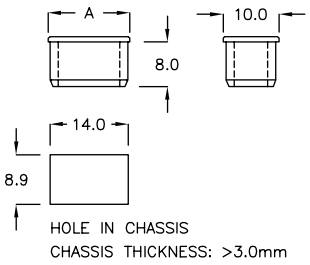

MINI SII 插头盖 MINI SII COVER — 13-52-5

- MATERIAL: PE
- COLOR: BLACK

PART NO	A	PACKAGE
NEY-01	19.2	500

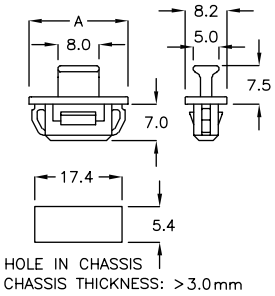

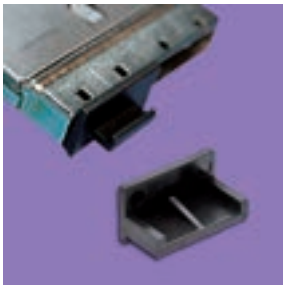

MINI SII 插头盖 MINI SII COVER 13-53-1

- MATERIAL: PP
- COLOR: BLACK

PART NO	A	PACKAGE
NEY-2A	17.8	500

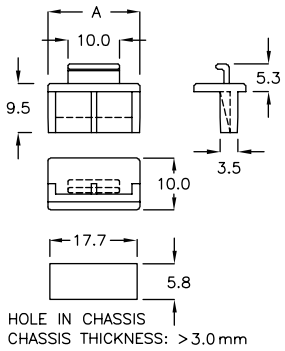

防尘盖 DUST COVER 13-53-2

- MATERIAL: NYLON 66(UL)
- FLAME CLASS: 94V-0/94V-2
- COLOR: BLACK

PART NO	A	PACKAGE
HBC-14CK	14.5	1000

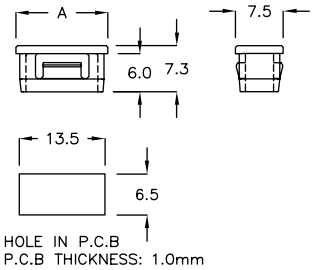

防尘盖 DUST COVER 13-53-3

- MATERIAL: NYLON 66(UL)
- FLAME CLASS: 94V-0/94V-2
- COLOR: BLACK

PART NO	A	PACKAGE
HBC-14FM	14.5	1000

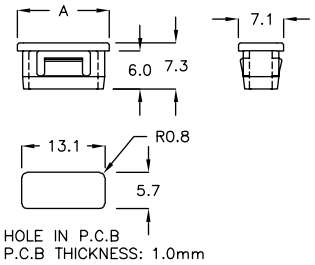

防尘盖 POWER CONNECTOR COVER 13-53-4

- MATERIAL: NYLON 66(UL)
- FLAME CLASS: 94V-0/94V-2
- COLOR: BLACK

PART NO	A	PACKAGE
HBF-01	20.5	1000

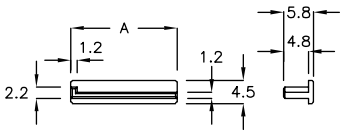

MCIO 防尘盖
MCIO CONNECTOR COVER 13-53-5

- MATERIAL: ABS+PC
- COLOR: BLACK

PART NO	A	B	PACKAGE
HCKA-27	27.0	7.8	500

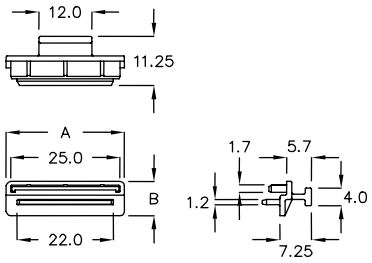

防尘盖 DUST COVER 13-54-1

- MATERIAL: ABS+PC
- COLOR: BLACK

PART NO	A	B	PACKAGE
HCKB-4A	7.0	5.0	500

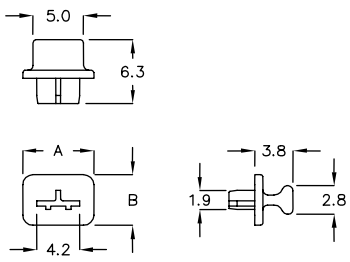

防尘盖 DUST COVER 13-54-2

- MATERIAL: ABS+PC
- COLOR: BLACK

PART NO	A	B	PACKAGE
HCKC-8A	11.0	6.0	500

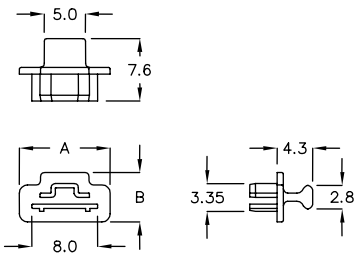

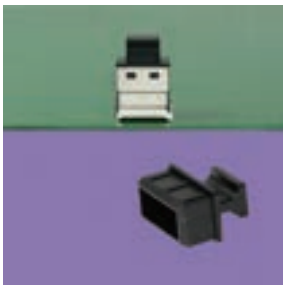

SLIM SAS X4 防尘盖
SLIM SAS X4 CONNECTOR COVER 13-54-3

- MATERIAL: ABS+PC
- COLOR: BLACK

PART NO	A	B	C	PACKAGE
HCKF-12	12.7	12.0	6.5	500

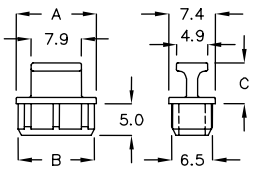

防尘盖 DUST COVER 13-54-4

- MATERIAL: NYLON 66(UL)
- FLAME CLASS: 94V-0/94V-2
- COLOR: BLACK

PART NO	A	PACKAGE
HCL-5M	7.0	1000

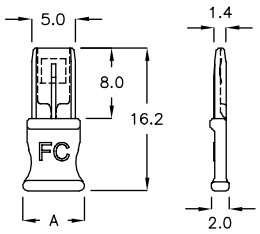

防尘盖 DUST COVER 13-54-5

- MATERIAL: TPE
- COLOR: BLACK

PART NO	A	PACKAGE
HCW-6T	9.0	1000

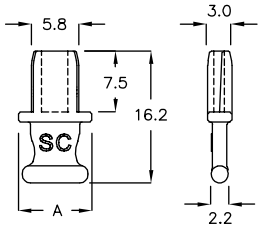

防尘盖 DUST COVER 13-55-1

- MATERIAL: TPE
- COLOR: BLACK

PART NO	A	PACKAGE
HCZ-5A	5.6	1000

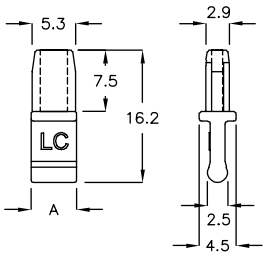

防尘盖 DUST COVER 13-55-2

- MATERIAL: PE
- COLOR: BLACK

PART NO	A	PACKAGE
NER-30A	32.5	500

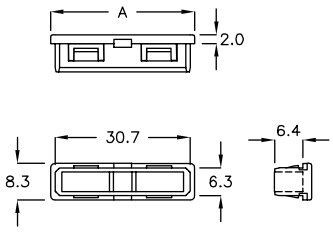

防尘盖 DUST COVER 13-55-3

- MATERIAL: NYLON 66(UL)
- FLAME CLASS: 94V-0/94V-2
- COLOR: BLACK

PART NO	A	PACKAGE
CFP-41A	41.7	200

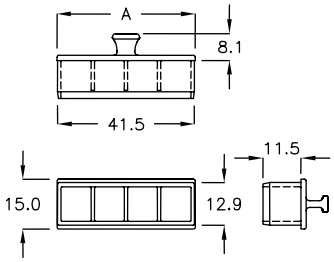

防尘盖 DUST COVER 13-55-4

- MATERIAL: NYLON 66(UL)
- FLAME CLASS: 94V-0/94V-2
- COLOR: NATURAL

PART NO	A	PACKAGE
HBA-01	ø18.0	1000

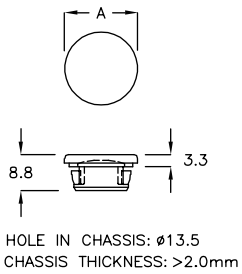

防尘盖 DUST COVER 13-55-5

- MATERIAL: NYLON 66(UL)
- FLAME CLASS: 94V-0/94V-2
- COLOR: NATURAL

PART NO	A	PACKAGE
HKA-20A	25.0	200

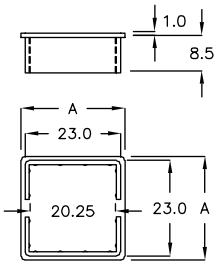

防尘盖 VCP CAP 13-56-1

- MATERIAL: PVC
- COLOR: BLACK

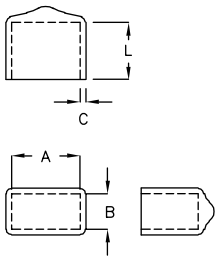

PART NO	A	B	L	C	PACKAGE
VCQ-7A	7.4	9.0	12.8	1.0	1000
VCQ-08	8.3	1.0	8.0	0.8	2000
VCQ-9A	9.6	4.5	16.0	1.2	1000
VCQ-10	10.1	1.0	7.0	1.0	
VCQ-12	12.0	4.7	10.0	1.0	

防尘盖 VCP CAP 13-56-2

- MATERIAL: PVC
- COLOR: BLACK,RED,WHITE,BLUE,YELLOW,GREEN
- UL STANDARD ALSO AVAILABLE

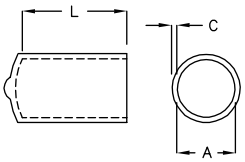

PART NO	A	L	C	PACKAGE
VCP-3.2	3.2	13.0	0.8	2000
VCP-4.0	4.0	8.0	0.8	1000
VCP-4.8	4.8	13.0	0.8	
VCP-5.7	5.7	13.0	1.0	
VCP-6.5	6.5	13.0	1.0	
VCP-7.6	7.6	8.0	1.0	
VCP-8.0	8.0	10.0	1.0	
VCP-9.5	9.4	16.0	1.0	
VCP-9.5A	9.5	13.0	1.0	
VCP-11	11.4	20.0	1.2	
VCP-12	12.0	16.0	1.2	500
VCP-14	14.0	35.0	1.2	
VCP-18	18.0	13.0	1.2	
VCP-18C	18.0	18.0	1.2	

插头盖 HOUSING COVER 13-56-3

- MATERIAL: PP
- COLOR: NATURAL

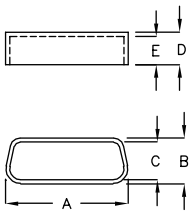

PART NO	A	B	C	D	E	SUITABLE SOCKET	PACKAGE
HC-0	18.1	9.2	7.85	6.5	5.7	9 PIN FEMALE	500
HC-1	26.0	9.2	7.85	6.5	5.7	15 PIN FEMALE	
HC-2	20.0	11.0	9.2	7.2	6.1	9 PIN MALE	
HC-15	39.8	9.2	7.85	6.5	5.7	25 PIN FEMALE	
HC-16	42.0	10.9	9.1	7.3	6.3	25 PIN MALE	200

插头盖 HOUSING COVER 13-56-4

- MATERIAL: NYLON 66(UL)
- FLAME CLASS: 94V-0/94V-2
- COLOR: BLACK

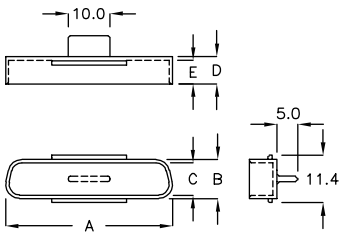

PART NO	A	B	C	D	E	SUITABLE SOCKET	PACKAGE
HC-15QC	40.05	9.4	7.75	6.6	5.6	25 PIN FEMALE	500

插头盖 HOUSING COVER 13-57-1

- MATERIAL: NYLON 66(UL)
- FLAME CLASS: 94V-0/94V-2
- COLOR: BLACK

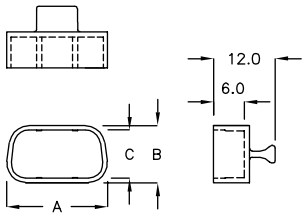

PART NO	A	B	C	SUITABLE SOCKET	PACKAGE
HCM−19J	19.6	11.1	9.4	9 PIN MALE	500

插头盖 HOUSING COVER 13-57-2

- MATERIAL: NYLON 66(UL)
- FLAME CLASS: 94V-0/94V-2
- COLOR: NATURAL

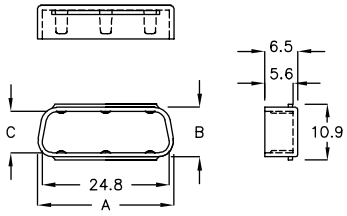

PART NO	A	B	C	SUITABLE SOCKET	PACKAGE
HC−1A	26.5	9.7	8.1	15 PIN FEMALE	500

DVI 防尘盖 DVI COVER 13-57-3

- MATERIAL: PE
- COLOR: NATURAL

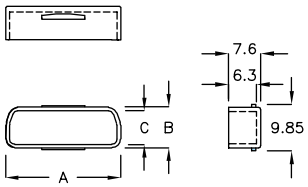

PART NO	A	B	C	PACKAGE
HC−1PZ	25.85	9.25	7.65	500

插头盖 HOUSING COVER 13-57-4

- MATERIAL: NYLON 66(UL)
- FLAME CLASS: 94V-0/94V-2
- COLOR: BLACK

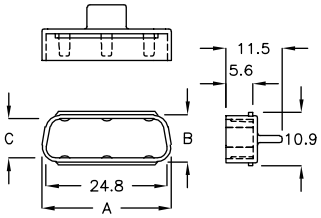

PART NO	A	B	C	SUITABLE SOCKET	PACKAGE
HCM−26F	26.5	9.7	8.1	15 PIN FEMALE	500

插头盖 HOUSING COVER 13-57-5

- MATERIAL: NYLON 66(UL)
- FLAME CLASS: 94V-0/94V-2
- COLOR: BLACK

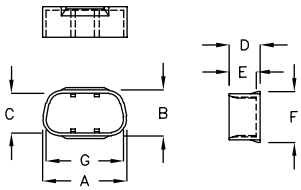

PART NO	A	B	C	D	E	F	G	SUITABLE SOCKET	PACKAGE
HC−02A	17.8	9.7	8.3	6.5	5.7	10.7	16.4	9 PIN FEMALE	500
HC−02C	18.4	10.0	8.0	6.1	5.0	11.2	16.4	9 PIN FEMALE	
HC−2FH	19.6	11.1	9.3	7.0	6.0	12.5	17.8	9 PIN MALE	

插头盖 HOUSING COVER 13-58-1

- MATERIAL: PE
- COLOR: NATURAL

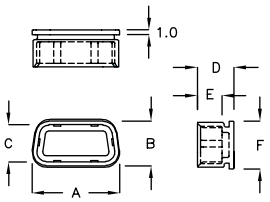

PART NO	A	B	C	D	E	F	SUITABLE SOCKET	PACKAGE
HC−2RF	18.0	9.4	7.8	7.7	5.2	10.1	9 PIN FEMALE	500

插头盖 HOUSING COVER 13-58-2

- MATERIAL: PP
- COLOR: NATURAL

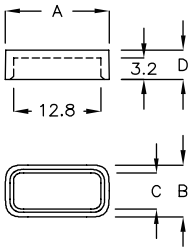

PART NO	A	B	C	D	PACKAGE
HC−12A	15.2	7.6	5.3	4.3	500

PDU-C14 防尘盖
PDU-C14 CONNECTOR COVER 13-58-3

- MATERIAL: PE
- COLOR: BLACK

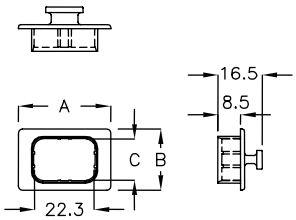

PART NO	A	B	C	PACKAGE
HDZ−23C	34.6	23.0	15.4	200

插头盖 HOUSING COVER 13-58-4

- MATERIAL: NYLON 66(UL)
- FLAME CLASS: 94V-0/94V-2
- COLOR: NATURAL

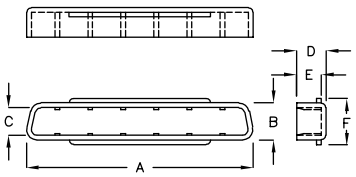

PART NO	A	B	C	D	E	F	PACKAGE
HC−17	48.0	7.9	5.9	6.3	5.3	9.9	200
HC−18	58.0	10.4	8.4	6.8	5.8	12.4	

防尘盖 DUST COVER 13-58-5

- MATERIAL: NYLON 66(UL)
- FLAME CLASS: 94V-0/94V-2
- COLOR: BLACK

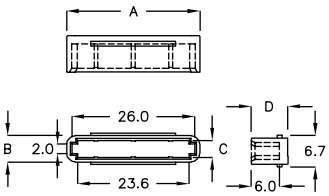

PART NO	A	B	C	D	PACKAGE
HC−28	28.2	5.7	3.6	7.7	500

DVI 防尘盖 DVI COVER 13-59-1

- MATERIAL: ABS(UL)
- FLAME CLASS: 94HB
- COLOR: BLACK

PART NO	A	B	C	D	E	F	PACKAGE
HC-24	40.1	9.8	5.7	32.6	2.5	ø3.4	500

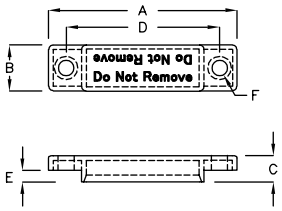

DVI 防尘盖 DVI COVER 13-59-2

- MATERIAL: ABS(UL)
- FLAME CLASS: 94HB
- COLOR: BLACK

PART NO	A	B	C	D	PACKAGE
HC-24A	40.0	9.8	3.3	32.5	500

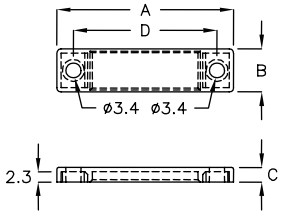

MDR 防尘盖 MDR DUST COVER 13-59-3

- MATERIAL: NYLON 66(UL)
- FLAME CLASS: 94V-0/94V-2
- COLOR: BLACK

PART NO	A	B	C	D	PACKAGE
HC-28DX	28.4	8.1	6.5	6.5	500

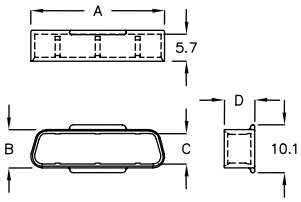

VGA 插头盖 VGA COVER 13-59-4

- MATERIAL: ABS(UL),NYLON 66(UL)
- FLAME CLASS: 94HB,94V-0
- COLOR: BLACK

PART NO	MATERIAL	A	B	PACKAGE
HDD-2A	ABS HB	34.0	19.3	200
HDE-2A	N66 V0	34.0	13.5	

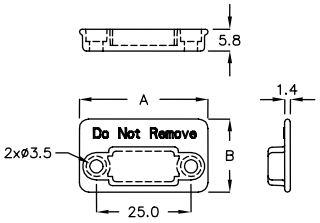

PLUG 防尘盖 PLUG DUST COVER 13-59-5

- MATERIAL: PE
- COLOR: BLACK

PART NO	A	B	C	D	PACKAGE
HDK-34	34.0	13.0	15.2	19.1	500

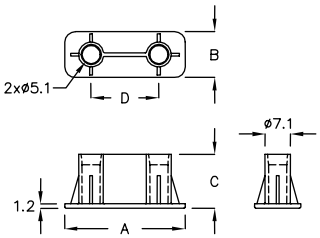

防尘盖 DUST COVER 13-60-1

- MATERIAL: PP(UL)
- COLOR: NATURAL

PART NO	A	B	PACKAGE
HCWT-37KF	29.4	22.0	200

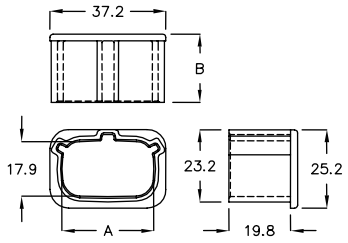

防尘盖 DUST COVER 13-60-2

- MATERIAL: PP(UL)
- COLOR: NATURAL

PART NO	A	B	PACKAGE
HCWT-41BQ	32.7	35.0	100

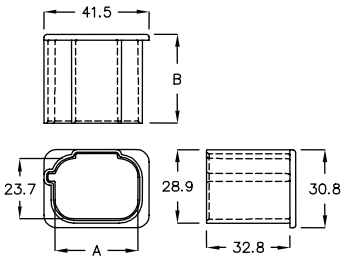

QPI 防尘盖 QPI DUST COVER 13-60-3

- MATERIAL: NYLON 66(UL)
- FLAME CLASS: 94V-0/94V-2
- COLOR: BLACK

PART NO	A	B	C	PACKAGE
QPI-57A	57.1	26.6	12.3	500

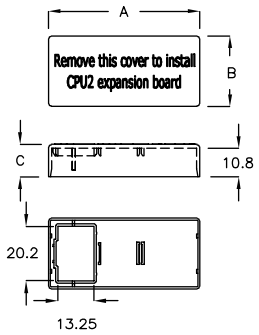

插头盖 HOUSING COVER 13-60-4

- MATERIAL: PP
- COLOR: NATURAL

PART NO	A	B	PACKAGE
HC-049	49.0	8.0	200

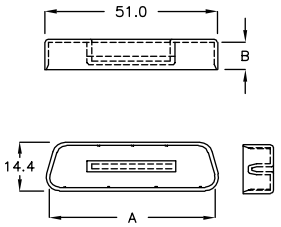

插头盖 HOUSING COVER 13-60-5

- MATERIAL: NYLON 66(UL)
- FLAME CLASS: 94V-0/94V-2
- COLOR: BLACK

PART NO	A	B	C	D	PACKAGE
HC-51	22.3	8.1	6.2	5.0	500

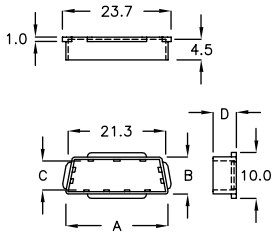

插头盖 HOUSING COVER 13-61-1

- MATERIAL: PE
- COLOR: BLACK

PART NO	A	B	PACKAGE
HC-5C	17.3	14.0	2000

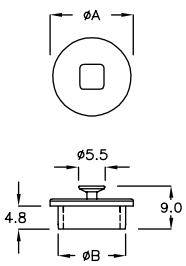

插头盖 HOUSING COVER 13-61-2

- MATERIAL: PE
- COLOR: BLACK

PART NO	A	B	PACKAGE
HC-5D	12.0	9.9	2000

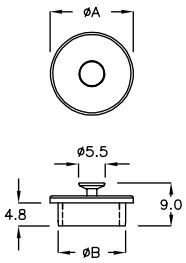

插头盖 PS-2 COVER 13-61-3

- MATERIAL: PP(UL)
- COLOR: BLACK

PART NO	A	B	PACKAGE
HC-5A	14.0	9.1	2000

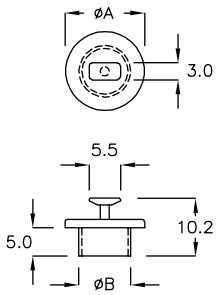

防尘盖 DUST COVER 13-61-4

- MATERIAL: NYLON 66(UL)
- FLAME CLASS: 94V-0/94V-2
- COLOR: NATURAL

PART NO	A	B	T CHASSIS THICKNESS	PACKAGE
HCR-20	20.0	1.0	0.8	2000
HCR-20CL	20.0	0.8	1.0	

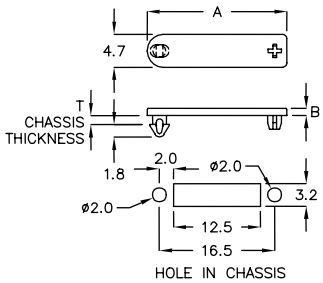

保护盖 HOLE PROTECT COVER 13-61-5

- MATERIAL: NYLON 66(UL)
- FLAME CLASS: 94V-0/94V-2
- COLOR: BLACK

PART NO	A	T CHASSIS THICKNESS	PACKAGE
BHR-21A	20.8	0.8	1000

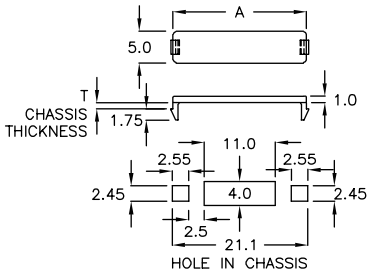

防尘盖 DUST COVER 13-62-1

- MATERIAL: TPR(UL)
- FLAME CLASS: 94V-0
- COLOR: BLACK

PART NO	A	T P.C.B THICKNESS	PACKAGE
HCD-01	12.0	0.8	1000

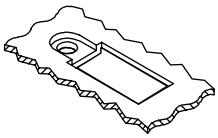

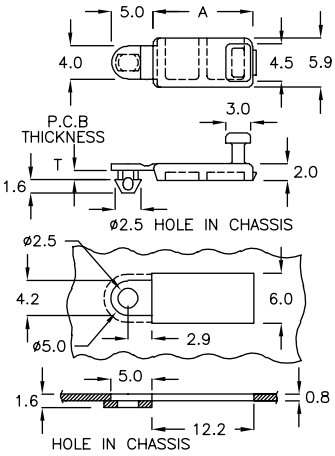

防尘盖 DUST COVER 13-62-2

- MATERIAL: NYLON 66(UL)
- FLAME CLASS: 94V-0/94V-2
- COLOR: NATURAL

PART NO	A	T CHASSIS THICKNESS	PACKAGE
HCP-24D	19.8	0.8	1000

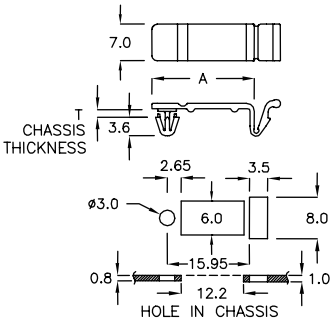

固定座 MOUNT 13-62-3

- MATERIAL: NYLON 66(UL)
- FLAME CLASS: 94V-0/94V-2
- COLOR: BLACK

PART NO	A	T CHASSIS THICKNESS	PACKAGE
HCP-55F	50.5	0.8	200

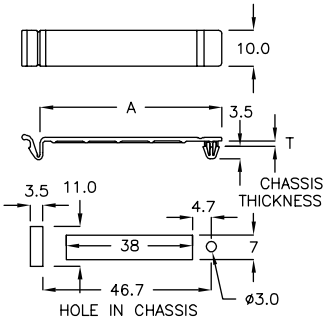

防尘盖 DUST COVER 13-62-4

- MATERIAL: NYLON 66(UL)
- FLAME CLASS: 94V-0/94V-2
- COLOR: BLACK

PART NO	A	T CHASSIS THICKNESS	PACKAGE
HCR-18K	18.4	0.8	2000

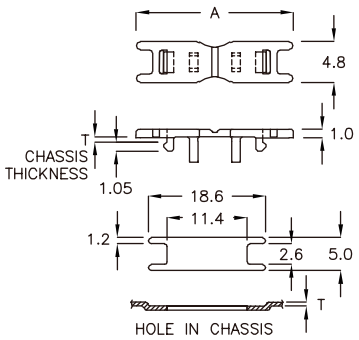

防尘盖 DUST COVER 13-63-1

- MATERIAL: TPE
- COLOR: GRAY

PART NO	A	PACKAGE
HCX-15A	15.5	1000

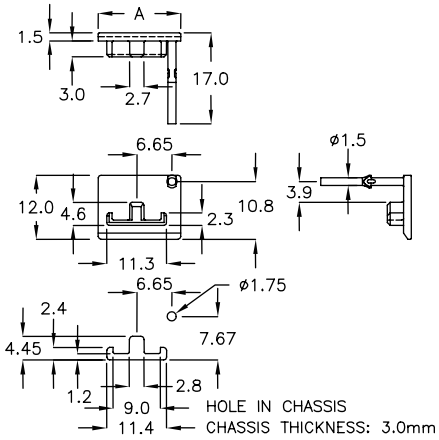

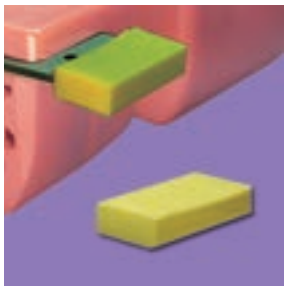

防尘盖 DUST COVER 13-63-2

- MATERIAL: PE
- COLOR: YELLOW

PART NO	A	B	C	PACKAGE
HCS-22	22.0	20.0	10.9	1000

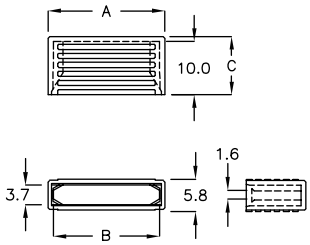

防尘盖 DUST COVER 13-63-3

- MATERIAL: PE
- COLOR: NATURAL

PART NO	A	B	C	PACKAGE
HCS-15KN	15.3	13.5	10.0	1000

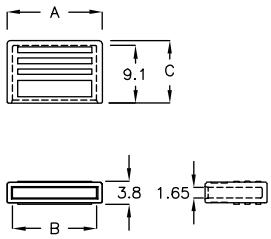

保护罩 INSULATION CAP 13-63-4

- MATERIAL: TPE
- FLAME CLASS:94V-0
- COLOR: BLACK

NEW

	PART NO	A	B	C	PACKAGE
★	HDL-10C	ø10.7	4.2	5.2	1000

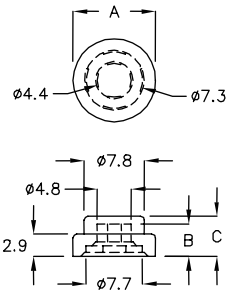

保护盖 PROTECT COVER 13-63-5

- MATERIAL: PE
- COLOR: BLACK

PART NO	A	B	C	PACKAGE
HDT-30	32.6	16.3	5.6	200

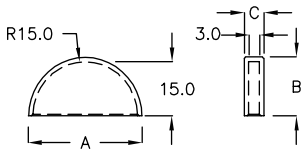

保护罩 INSULATION CAP 13-64-1

- MATERIAL: NYLON 66(UL)
- FLAME CLASS: 94V-0/94V-2
- COLOR: BLACK

PART NO	A	B	C	PACKAGE
HDQ-5C	14.8	5.6	13.3	1000

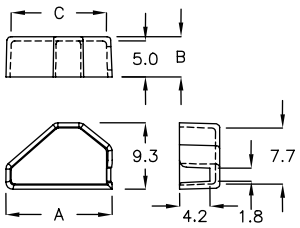

保护盖 PROTECT COVER 13-64-2

- MATERIAL: NYLON 66(UL)
- FLAME CLASS: 94V-0/94V-2
- COLOR: BLACK

PART NO	A	B	C	PACKAGE
HDTC-17K	ø13.0	16.7	17.7	200

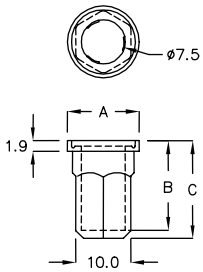

保护盖 INSULATION CAP 13-64-3

- MATERIAL: NYLON 66(UL)
- FLAME CLASS: 94V-0/94V-2
- COLOR: NATURAL

NEW

PART NO	A	T CHASSIS THICKNESS	PACKAGE
★ HDU-16A	ø16.0	1.0	500

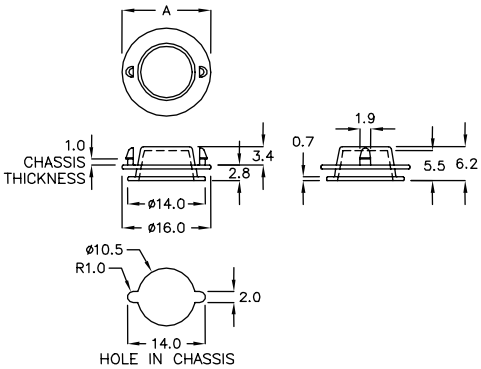

光纤插头盖 TRANSPORTER COVER 13-64-4

- MATERIAL: NYLON 66(UL)
- FLAME CLASS: 94V-0/94V-2
- COLOR: BLACK

PART NO	A	B	PACKAGE
HF-01	6.0	3.8	500

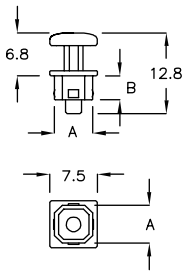

光纤插头盖 TRANSPORTER COVER 13-64-5

- MATERIAL: TPE
- COLOR: BLACK

PART NO	A	B	C	D	PACKAGE
HFK-01	14.1	10.0	7.5	19.6	500

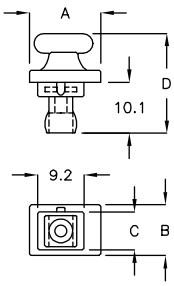

插头盖 COVER 13-65-1

- MATERIAL: NYLON 66(UL)
- FLAME CLASS: 94V-0/94V-2
- COLOR: BLACK

PART NO	A	B	C	D	PACKAGE
HCK–7A	12.0	8.6	3.3	9.6	500

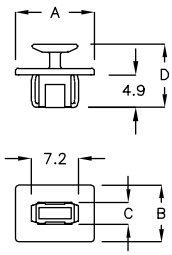

插头盖 SATA DUST COVER 13-65-2

- MATERIAL: PE
- COLOR: NATURAL

PART NO	A	B	C	D	PACKAGE
HTA–10A	12.8	5.5	3.4	7.6	1000

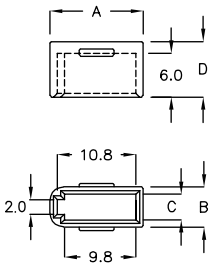

固定座 MOUNT 13-65-3

- MATERIAL: NYLON 66(UL)
- FLAME CLASS: 94V-0/94V-2
- COLOR: BLACK

PART NO	A	øB	C	PACKAGE
PEB–01	4.3	25.3	7.3	1000

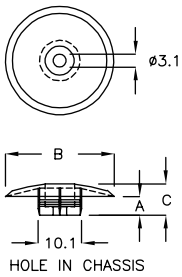

USB 插头盖 USB COVER 13-65-4

- MATERIAL: PP
- COLOR: NATURAL

PART NO	A	B	C	D	E	PACKAGE
USB–01	10.6	9.5	7.35	13.0	12.0	1000

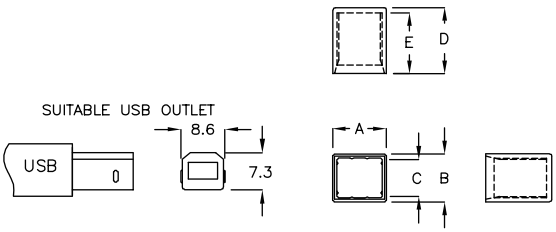

USB 插头盖 USB COVER 13-65-5

- MATERIAL: PP
- COLOR: NATURAL

PART NO	A	B	C	D	E	PACKAGE
USB–02	14.15	6.8	4.55	13.2	12.2	1000

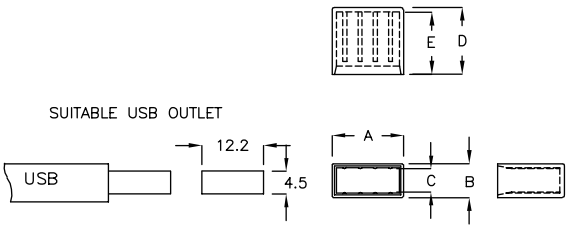

USB 插头盖 USB COVER 13-66-1

- MATERIAL: PP
- COLOR: BLACK

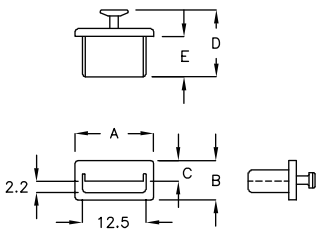

PART NO	A	B	C	D	E	PACKAGE
USB-03	15.5	7.8	4.1	13.2	8.0	1000

USB 插头盖 USB COVER 13-66-2

- MATERIAL: ABS(UL)
- FLAME CLASS: 94HB
- COLOR: BLACK

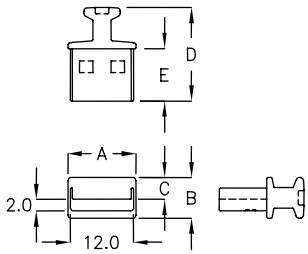

PART NO	A	B	C	D	E	PACKAGE
USB-3GJ	13.0	7.0	3.75	16.2	9.0	1000

USB 插头盖 USB COVER 13-66-3

- MATERIAL: PP
- COLOR: NATURAL,BLACK

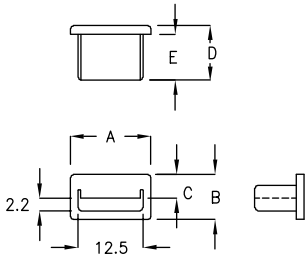

PART NO	A	B	C	D	E	PACKAGE
USB-3A	15.5	7.8	4.1	9.5	8.0	500

MICRO USB 插头盖 MICRO USB COVER 13-66-4

- MATERIAL: TPE(UL)
- FLAME CLASS:94V-0
  COLOR: BLACK

NEW

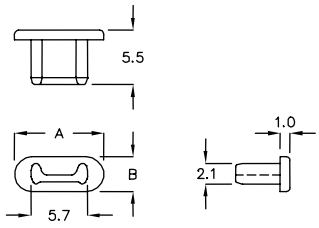

	PART NO	A	B	PACKAGE
★	USB-6AK	9.0	5.5	1000

USB 插头盖 USB COVER 13-66-5

- MATERIAL: PP
- COLOR: NATURAL,BLACK

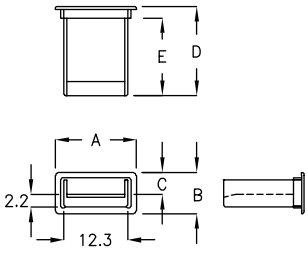

PART NO	A	B	C	D	E	PACKAGE
USB-3FK	15.6	7.2	3.85	15.5	13.5	500

USB 3.0 插头盖 MICRO USB 3.0 COVER — 13-67-1

- MATERIAL: NYLON 66(UL)
- FLAME CLASS: 94V-0/94V-2
- COLOR: NATURAL,BLACK

PART NO	A	B	PACKAGE
USB-3HQ	15.0	5.5	500

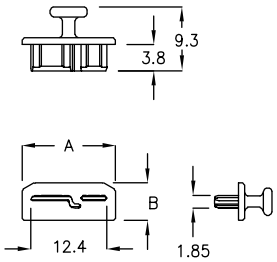

USB 3.0 插头盖 MICRO USB 3.0 COVER — 13-67-2

- MATERIAL: NYLON 66(UL)
- FLAME CLASS: 94V-0/94V-2
- COLOR: NATURAL

PART NO	A	B	PACKAGE
USB-3RT	12.1	4.8	500

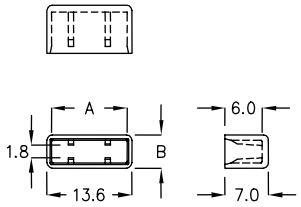

TYPE-C 插头盖 TYPE-C COVER — 13-67-3

- MATERIAL: NYLON 66(UL)
- FLAME CLASS: 94V-0/94V-2
- COLOR: NATURAL

PART NO	A	B	PACKAGE
USB-3WP	12.0	6.4	500

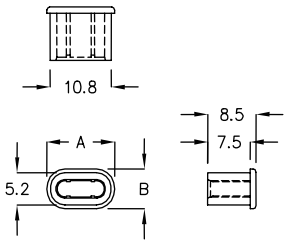

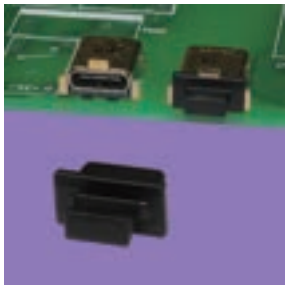

TYPE-C 插头盖 TYPE-C COVER — 13-67-4

- MATERIAL: PE
- COLOR: BLACK

PART NO	A	B	C	PACKAGE
USB-3GT	10.5	5.5	2.3	2000

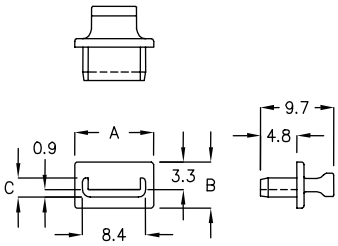

TYPE-C 插头盖 TYPE-C COVER — 13-67-5

- MATERIAL: NYLON 66(UL)
- FLAME CLASS: 94V-0/94V-2
- COLOR: BLACK

PART NO	A	B	C	PACKAGE
USB-3KN	10.5	5.5	2.3	500

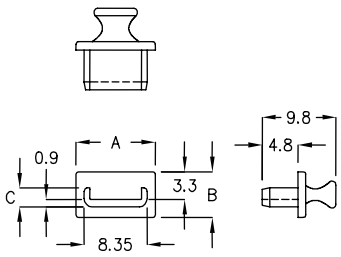

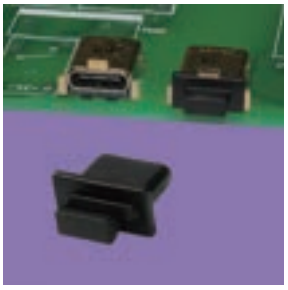

TYPE-C 插头盖 TYPE-C COVER 13-68-1

- MATERIAL: PE
- COLOR: BLACK

PART NO	A	B	C	PACKAGE
USB-3QA	10.5	5.5	2.5	2000

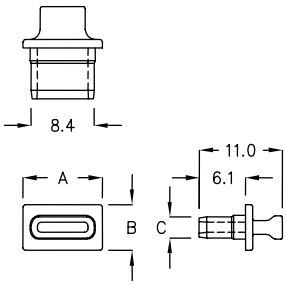

USB1394 插头盖 USB COVER 13-68-2

- MATERIAL: NYLON 66(UL)
- FLAME CLASS: 94V-0/94V-2
- COLOR: BLACK

PART NO	A	B	PACKAGE
USB-04	11.0	10.3	1000

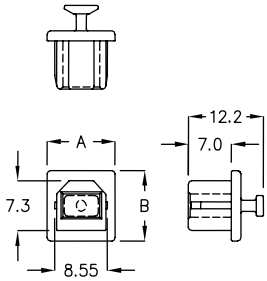

USB 插头盖 USB COVER 13-68-3

- MATERIAL: ABS(UL)
- FLAME CLASS: 94V-0
- COLOR: BLACK

PART NO	A	B	C	D	E	PACKAGE
USB-05	17.8	19.0	15.0	17.0	15.5	500

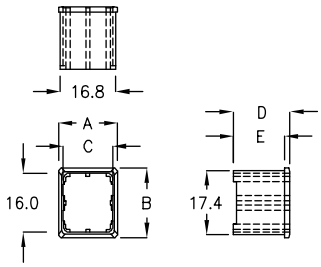

MINI USB 插头盖 USB COVER 13-68-4

- MATERIAL: PE
- COLOR: BLACK

PART NO	A	B	C	D	E	PACKAGE
USB-06	9.5	4.8	1.0	7.2	5.0	1000

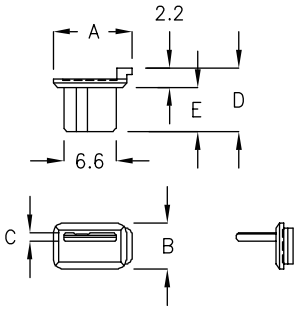

MINI USB 插头盖 USB COVER 13-68-5

- MATERIAL: NYLON 66(UL)
- FLAME CLASS: 94V-0/94V-2
- COLOR: NATURAL,BLACK

PART NO	A	B	PACKAGE
USB-9MT	10.0	6.0	1000

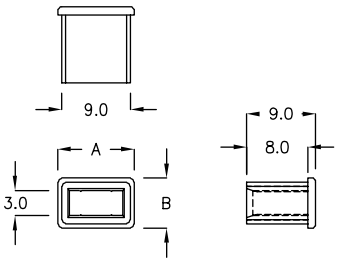

USB 插头盖 USB COVER 13-69-1

- MATERIAL: PP
- COLOR: BLACK

PART NO	A	B	C	PACKAGE
USB-07	16.5	10.0	3.7	2000

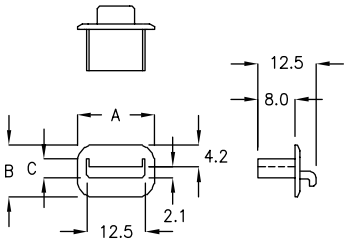

USB1394 保护盖 USB COVER 13-69-2

- MATERIAL: PE
- COLOR: BLACK

PART NO	A	B	C	D	E	F	PACKAGE
USF-01	13.2	8.5	6.0	8.9	7.3	1.8	2000
USF-02	13.2	8.5	6.0	8.9	7.3	1.0	

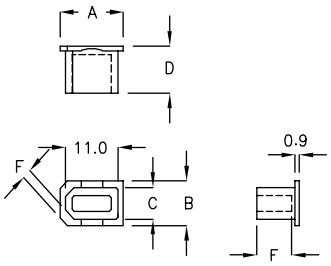

USB1394 保护盖 USB COVER 13-69-3

- MATERIAL: PP
- COLOR: BLACK

PART NO	A	B	C	PACKAGE
USF-03	16.0	10.8	6.0	2000

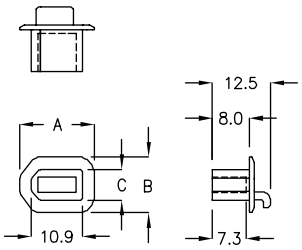

USB 保护盖 USB COVER 13-69-4

- MATERIAL: NYLON 66(UL)
- FLAME CLASS: 94V-0/94V-2
- COLOR: BLACK

PART NO	A	B	PACKAGE
USJ-2JM	15.6	16.3	500

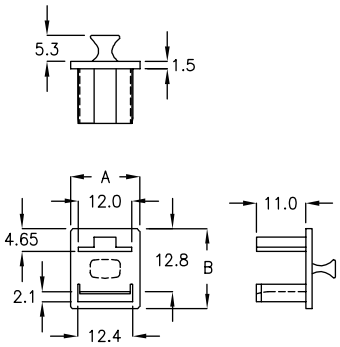

USB 保护盖 USB COVER 13-69-5

- MATERIAL: PP
- COLOR: BLACK

PART NO	A	B	PACKAGE
USQ-15C	7.7	7.4	500

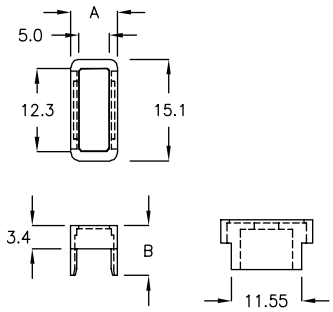

保护盖 GPS COVER 13-70-1

- MATERIAL: NYLON 66(UL)
- FLAME CLASS: 94V-0/94V-2
- COLOR: NATURAL

PART NO	A	B	PACKAGE
LHZ-21K	21.5	7.17	500

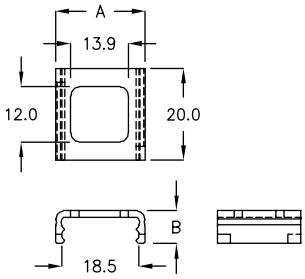

电源插座保护盖 SOCKET COVER 13-70-2

- MATERIAL: ABS(UL)
- FLAME CLASS: 94V-0
- COLOR: NATURAL

PART NO	A	B	C	PACKAGE
HDB-01	ø25.0	5.5	14.0	200

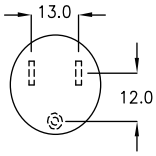

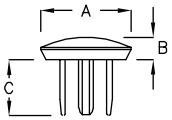

电源插座保护盖 DUST COVER 13-70-3

- MATERIAL: TPE(UL)
- FLAME CLASS: 94V-0
- COLOR: BLACK

PART NO	A	B	PACKAGE
HDY-16A	24.3	16.0	500

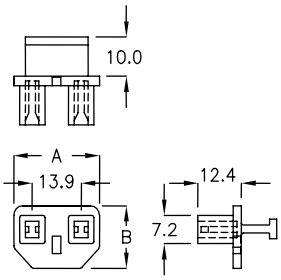

HDMI 插头盖 HDMI COVER 13-70-4

- MATERIAL: NYLON 66(UL)
- FLAME CLASS: 94V-0/94V-2
- COLOR: NATURAL

PART NO	A	B	PACKAGE
DMI-01	14.2	4.2	500

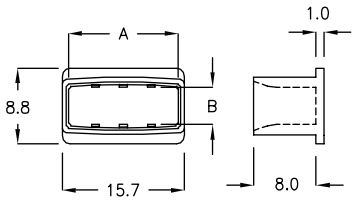

HDMI 插头盖 HDMI COVER 13-70-5

- MATERIAL: NYLON 66(UL)
- FLAME CLASS: 94V-0/94V-2
- COLOR: NATURAL

PART NO	A	B	PACKAGE
DMI-02	13.8	4.4	1000

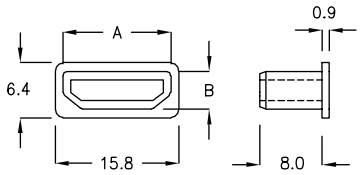

HDMI 插头盖 HDMI COVER 13-71-1

- MATERIAL: PE
- COLOR: NATURAL,BLACK

PART NO	A	B	FORM	PACKAGE
DMI-2C	13.8	4.4	1	1000
DMI-2P	13.8	4.4	2	

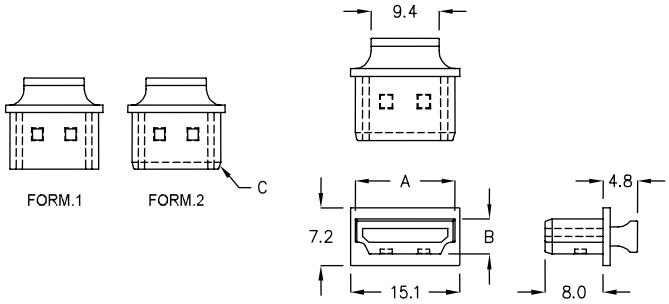

HDMI 插头盖 HDMI COVER 13-71-2

- MATERIAL: NYLON 66(UL)
- FLAME CLASS: 94V-0/94V-2
- COLOR: BLACK

PART NO	A	B	PACKAGE
DMI-2TA	15.5	4.4	1000

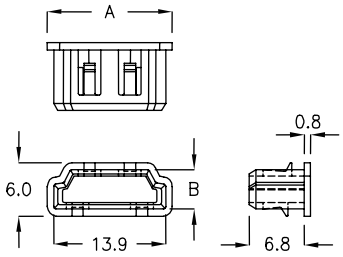

HDMI 插头盖 HDMI COVER 13-71-3

- MATERIAL: PP
- COLOR: BLACK

PART NO	A	B	PACKAGE
DMI-3K	13.9	4.4	1000

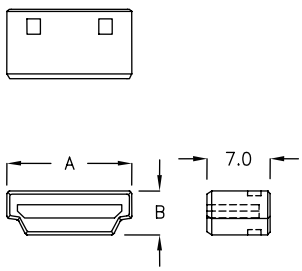

DVI 插头盖 DVI COVER 13-71-4

- MATERIAL: NYLON 66(UL)
- FLAME CLASS: 94V-0/94V-2
- COLOR: NATURAL

PART NO	A	B	PACKAGE
DVI-01	25.1	8.5	500

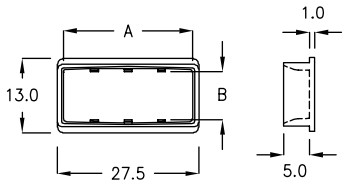

DVI 插头盖 DVI COVER 13-71-5

- MATERIAL: NYLON 66(UL)
- FLAME CLASS: 94V-0/94V-2
- COLOR: NATURAL

PART NO	A	B	PACKAGE
DVI-02	23.9	8.0	500

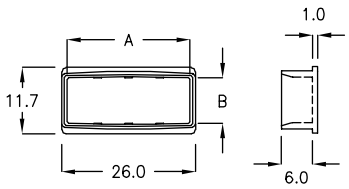

DVI 插头盖 DVI COVER 13-72-1

- MATERIAL: NYLON 66(UL)
- FLAME CLASS: 94V-0/94V-2
- COLOR: NATURAL

PART NO	A	B	PACKAGE
DVI-2WT	23.8	7.8	500

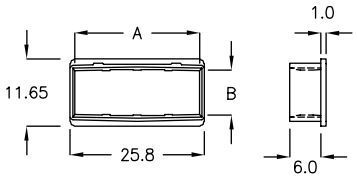

RJ45 插头盖 RJ45 COVER 13-72-2

- MATERIAL: NYLON 66(UL)
- FLAME CLASS: 94V-0/94V-2
- COLOR: BLACK

PART NO	A	B	PACKAGE
NET-1QH	11.9	9.4	500

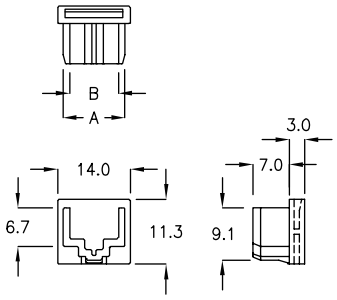

RJ45 插头盖 RJ45 COVER 13-72-3

- MATERIAL: PP
- COLOR: BLACK

PART NO	A	B	PACKAGE
NEX-01	11.9	9.4	500

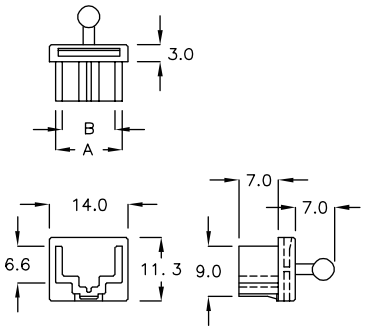

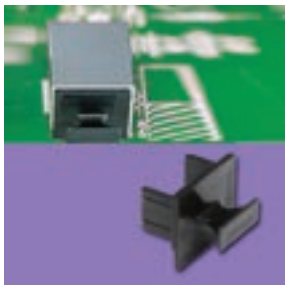

RJ45 插头盖 RJ45 COVER 13-72-4

- MATERIAL: NYLON 66(UL)
- FLAME CLASS: 94V-0/94V-2
- MATERIAL: TPE
- FLAME CLASS: 94V-0
- COLOR: BLACK

PART NO	A	B	C	D	E	F	G	MATERIAL	PACKAGE
NEX-02	12.1	9.5	14.1	11.6	6.4	6.0	1.2	N66	500
NEX-3K	11.9	9.0	17.6	13.25	6.4	6.0	1.2	N66	
NEX-4KJ	12.0	9.5	13.5	11.6	6.4	6.0	1.2	TPE	
★ NEX-5FT	12.0	9.4	12.0	11.3	5.2	8.0	1.0	N66	

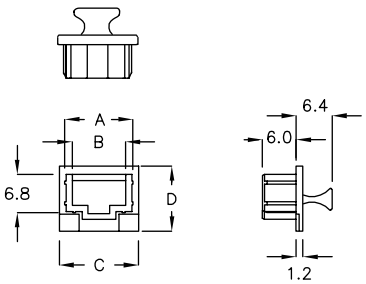

RJ45 插头盖 RJ45 COVER 13-72-5

- MATERIAL: NYLON 66(UL)
- FLAME CLASS: 94V-0/94V-2
- COLOR: BLACK

PART NO	A	B	PACKAGE
NET-2FM	12.0	9.4	500

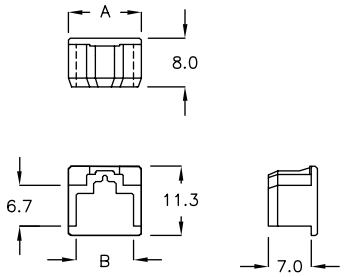

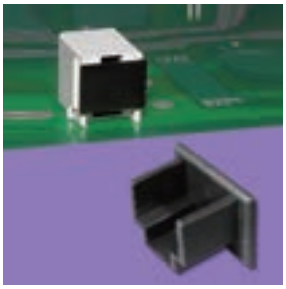

RJ12 插头盖 RJ12 COVER 13-73-1

- MATERIAL: PP
- COLOR: BLACK,NATURAL

PART NO	A	B	PACKAGE
NET-02	10.0	8.2	500

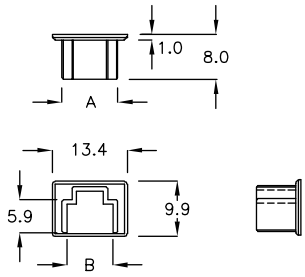

RJ12 插头盖 RJ12 COVER 13-73-2

- MATERIAL: NYLON 66(UL)
- FLAME CLASS: 94V-0/94V-2
- COLOR: BLACK

PART NO	A	B	PACKAGE
NET-2HK	10.0	8.0	500

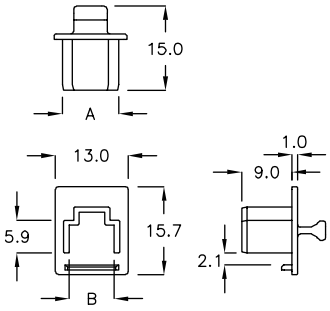

RJ12 插头盖 RJ12 COVER 13-73-3

- MATERIAL: PP
- COLOR: BLACK

PART NO	A	B	PACKAGE
NET-02A	9.8	8.0	500

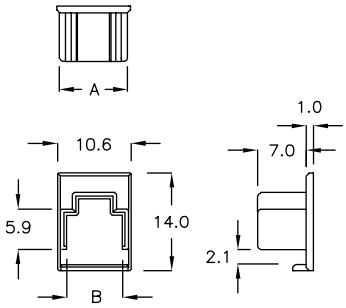

PCIEX1 插头盖 PCIEX1 COVER 13-73-4

- MATERIAL: NYLON 66(UL)
- FLAME CLASS: 94V-0/94V-2
- COLOR: BLACK

NEW

PART NO	A	B	PACKAGE
★ PCIE-1A	20.5	9.0	500

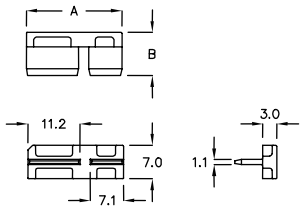

RJ11 防尘盖 RJ11 COVER 13-73-5

- MATERIAL: NYLON 66(UL)
- FLAME CLASS: 94V-0/94V-2
- COLOR: BLACK

PART NO	A	B	PACKAGE
RJ-12	7.75	6.2	1000

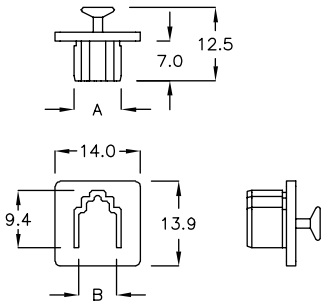

MICRO FIT 防尘盖 MICRO FIT COVER —— 13-74-1

- MATERIAL: ABS+PC
- COLOR: BLACK

PART NO	A	PACKAGE
NEG-12K	9.0	1000

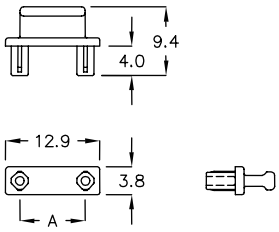

插头盖 CONNECTOR COVER —— 13-74-2

- MATERIAL: NYLON 66(UL)
- FLAME CLASS: 94V-0/94V-2
- COLOR: BLACK

PART NO	A	PACKAGE
NES-4A	7.7	500

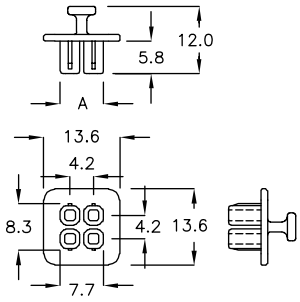

电源底座插头盖 CONNECTOR COVER —— 13-74-3

- MATERIAL: NYLON 66(UL)
- FLAME CLASS: 94V-0/94V-2
- COLOR: BLACK

PART NO	A	PACKAGE
NEA-12J	8.35	500

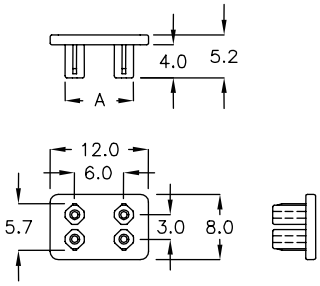

电源底座插头盖 CONNECTOR COVER —— 13-74-4

- MATERIAL: PP
- COLOR: BLACK

PART NO	A	PACKAGE
NES-14A	12.04	500

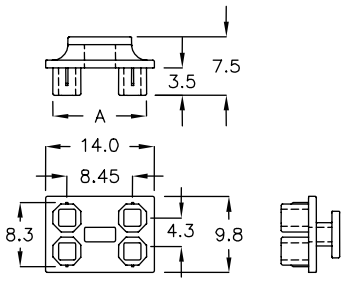

电源底座插头盖 CONNECTOR COVER —— 13-74-5

- MATERIAL: NYLON 66(UL)
- FLAME CLASS: 94V-0/94V-2
- COLOR: BLACK

PART NO	A	PACKAGE
NES-18C	16.3	500

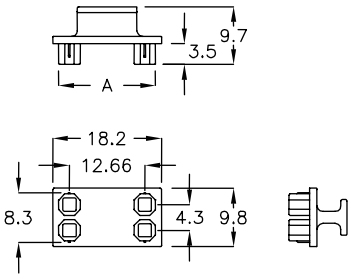

电源底座插头盖 CONNECTOR COVER 13-75-1

- MATERIAL: NYLON 66(UL)
- FLAME CLASS: 94V-0/94V-2
- COLOR: NATURAL

PART NO	A	PACKAGE
NEQ-34K	28.7	500

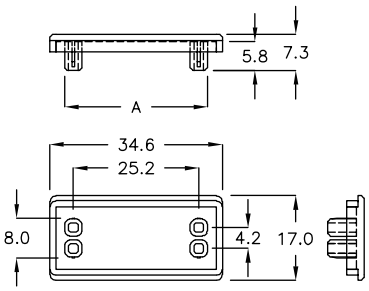

DP 防尘盖 DP COVER 13-75-2

- MATERIAL: PE
- COLOR: NATURAL

PART NO	A	PACKAGE
DP-2KT	15.9	1000

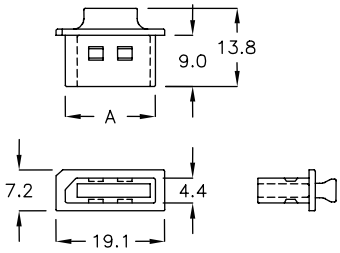

DP 防尘盖 DP COVER 13-75-3

- MATERIAL: NYLON 66(UL)
- FLAME CLASS: 94V-0/94V-2
- COLOR: BLACK

PART NO	A	PACKAGE
DP-01	15.9	1000

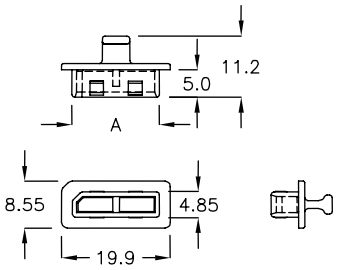

DP 防尘盖 DP COVER 13-75-4

- MATERIAL: PP
- COLOR: BLACK

PART NO	A	PACKAGE
DP-3F	16.0	1000

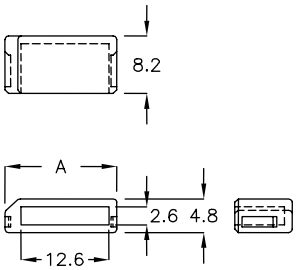

PCIE 防尘盖 PCI EXPRESS COVER 13-75-5

- MATERIAL: PE
- COLOR: BLACK

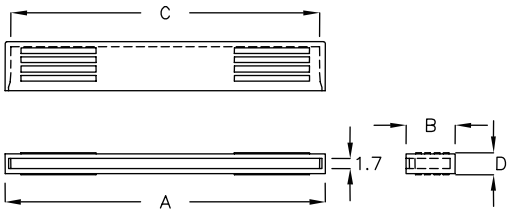

PART NO	A	B	C	D	PACKAGE
HCS-44AT	44.0	8.0	41.8	4.0	500
HCS-55FN	55.4	8.6	53.2	3.8	

PCIE 防尘盖 PCI EXPRESSx16 COVER 13-76-1

- MATERIAL: PE
- COLOR: NATURAL

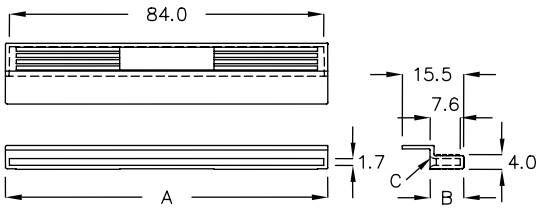

PART NO	A	B	C	PACKAGE
HCS-86FQ	86.0	8.5	—	200
HCS-86HX	86.0	8.5	1.0	

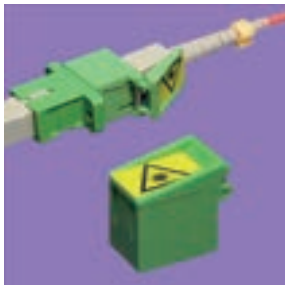

SC 型光纤盖组合 OPTICAL FIBER COVER 13-76-2

- MATERIAL: NYLON 66(UL)
- FLAME CLASS: 94V-0/94V-2
- COLOR: GREEN

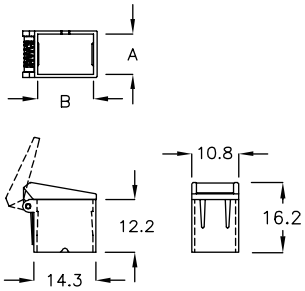

PART NO	A	B	PACKAGE
FIB-13-NOH	9.4	12.9	500

光纤保护盖 OPTICAL FIBER COVER 13-76-3

- MATERIAL: NYLON 66(UL)
- FLAME CLASS: 94V-0/94V-2
- COLOR: NATURAL

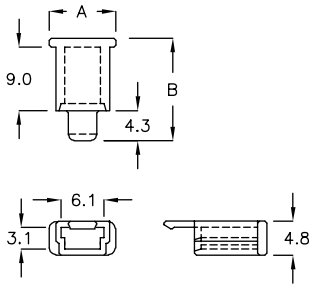

PART NO	A	B	PACKAGE
MNA-11C	9.5	14.6	2000

防尘盖 DUST COVER 13-76-4

- MATERIAL: NYLON 66(UL)
- FLAME CLASS: 94V-0/94V-2
- COLOR: BLACK

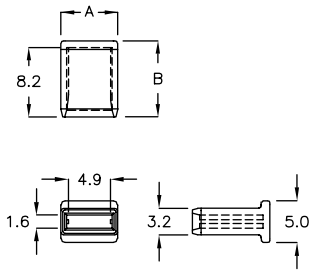

PART NO	A	B	PACKAGE
MNW-9A	6.6	9.0	1000

音频插座固定座 Φ3.5 AUDIO MOUNT —— 13-77-1

- MATERIAL: NYLON 66(UL)
- FLAME CLASS: 94V-0/94V-2
- COLOR: BLACK

PART NO	A	B	T P.C.B. THICKNESS	PACKAGE
MRZ−14	8.6	6.0	1.65	1000

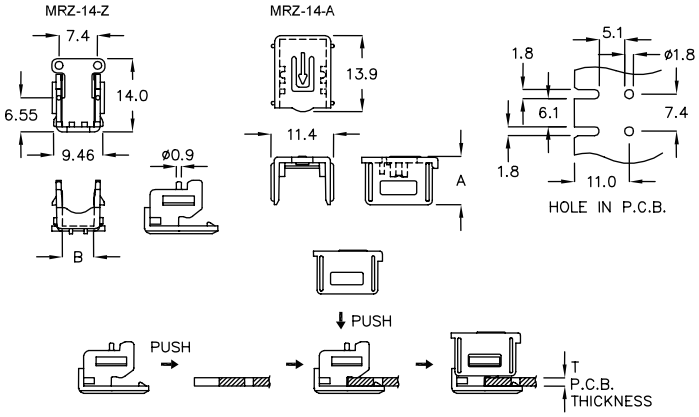

TYPE-C 固定座 MOUNT —— 13-77-2

- MATERIAL: ABS+PC(UL)
- FLAME CLASS: 94V-0
- COLOR: BLACK

PART NO	A	B	C	PACKAGE
MIR−14	6.3	14.0	7.4	200

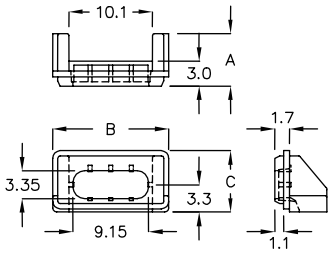

MICRO-FIT 固定座 MICRO-FIT CONNECTOR HOLDER —— 13-77-3

- MATERIAL: NYLON 66(UL)
- FLAME CLASS: 94V-0/94V-2
- COLOR: BLACK

PART NO	A	B	C	PACKAGE
MJQB−18AT	8.0	16.7	12.2	500

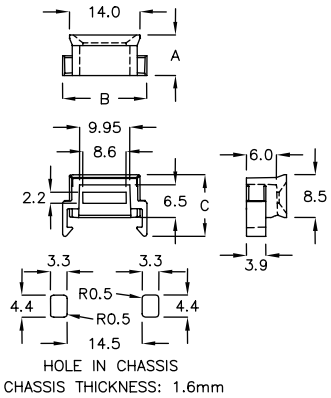

SD 卡保护座 SD CARD SOCKET COVER —— 13-77-4

- MATERIAL: ABS(UL)
- COLOR: BLACK

PART NO	A	B	PACKAGE
SDH−01	32.0	24.0	500

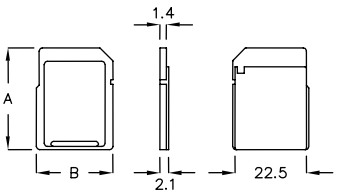

保护盖 CONNECTOR MOUNT 13-78-1

- MATERIAL: NYLON 66(UL)
- FLAME CLASS: 94V-0/94V-2
- COLOR: BLACK

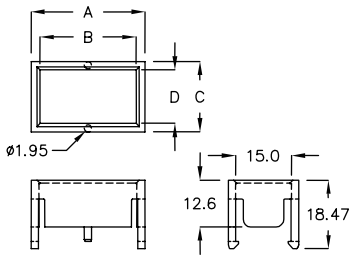

PART NO	A	B	C	D	PACKAGE
MNK-30YM	30.6	25.8	18.9	14.4	200

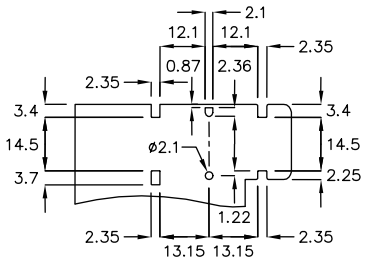

保护盖 CONNECTOR MOUNT 13-78-2

- MATERIAL: NYLON 66(UL)
- FLAME CLASS: 94V-0/94V-2
- COLOR: BLACK

PART NO	A	B	PACKAGE
MTQA-6KF	6.0	14.0	1000

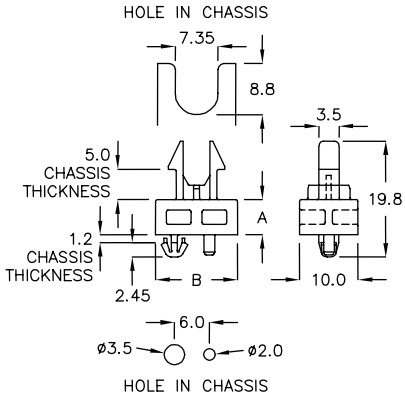

固定座 MOUNT 13-78-3

- MATERIAL: NYLON 66(UL)
- FLAME CLASS: 94V-0/94V-2
- COLOR: BLACK

PART NO	A	B	PACKAGE
MRQ-14M	17.3	4.8	1000

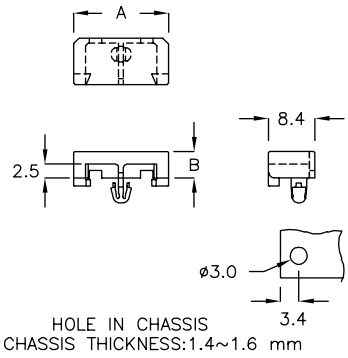

固定座 MOUNT 13-78-4

- MATERIAL: NYLON 66(UL)
- FLAME CLASS: 94V-0/94V-2
- COLOR: BLACK

PART NO	A	B	PACKAGE
MRQ-29	29.1	5.6	1000

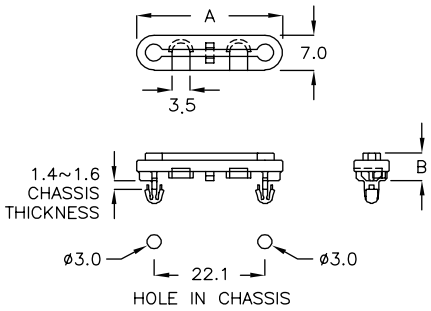

网通卡固定座 MOUNT 13-79-1

- MATERIAL: NYLON 66(UL)
- FLAME CLASS: 94V-0/94V-2
- COLOR: NATURAL
- USE M2.5 SCREW

PART NO	A	PACKAGE
MRR-29	29.3	2000

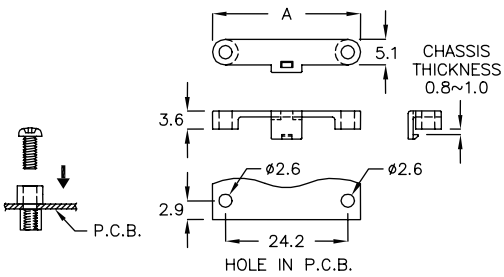

网通卡固定座 MOUNT 13-79-2

- MATERIAL: NYLON 66(UL)
- FLAME CLASS: 94V-0/94V-2
- COLOR: NATURAL
- USE M2.5 SCREW

PART NO	A	B	C	PACKAGE
MRR-29AK	29.3	19.1	5.1	2000
MRR-29HC	29.3	20.1	4.4	

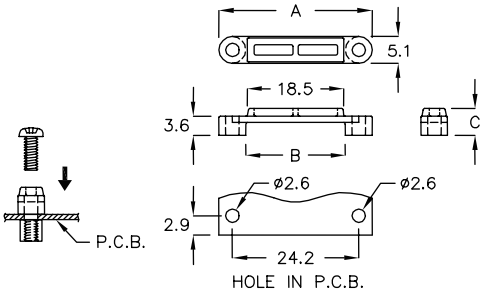

M.2 卡固定座 MOUNT 13-79-3

- MATERIAL: NYLON 66(UL)
- FLAME CLASS: 94V-0/94V-2
- COLOR: BLACK

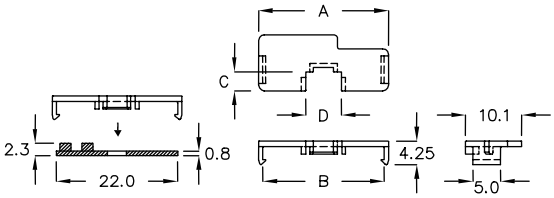

PART NO	A	B	C	D	PACKAGE
MRH-23FC	23.4	21.9	3.4	6.4	2000

M.2 卡固定座 MOUNT 13-79-4

- MATERIAL: NYLON 66(UL)
- FLAME CLASS: 94V-0/94V-2
- COLOR: NATURAL

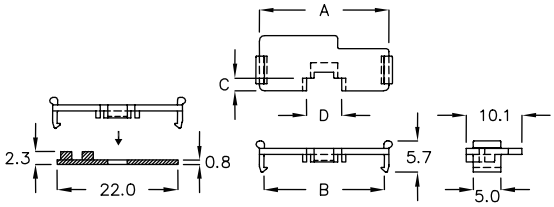

PART NO	A	B	C	D	PACKAGE
MRH-23AC	23.6	21.8	2.4	6.4	2000
MRH-23TG	23.6	21.9	2.4	5.0	
MRH-23SK	23.6	21.9	3.4	6.4	

M.2 卡固定座 MOUNT 13-79-5

- MATERIAL: NYLON 66(UL)
- FLAME CLASS: 94V-0/94V-2
- COLOR: NATURAL

NEW

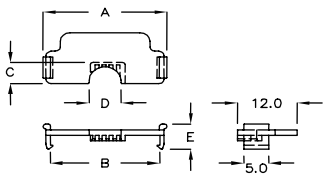

	PART NO	A	B	C	D	E	PACKAGE
★	MRHA-23BT	24.9	22.0	5.0	6.4	6.0	2000

M.2 卡固定座 MOUNT 13-80-1

- MATERIAL: NYLON 66(UL)
- FLAME CLASS: 94V-0/94V-2
- COLOR: BLACK

NEW

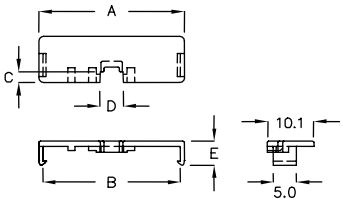

PART NO	A	B	C	D	E	PACKAGE
★ MRH-31FC	31.6	29.9	2.4	5.0	5.25	2000

M.2 卡固定座 MOUNT 13-80-2

- MATERIAL: NYLON 66(UL)
- FLAME CLASS: 94V-0/94V-2
- COLOR: BLACK

NEW

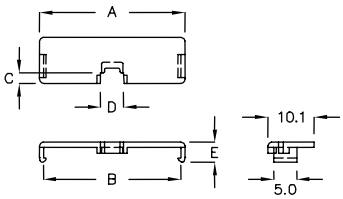

PART NO	A	B	C	D	E	PACKAGE
★ MRH-31KS	31.6	29.9	2.4	5.0	4.35	2000

M.2 卡固定座 MOUNT 13-80-3

- MATERIAL: NYLON 66(UL)
- FLAME CLASS:94V-0/94V-2
- COLOR: BLACK

NEW

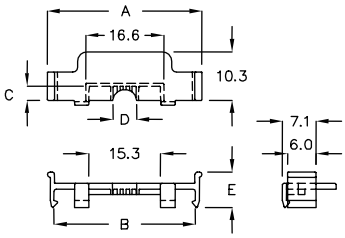

PART NO	A	B	C	D	E	PACKAGE
★ MRM-31FQ	32.9	30.1	3.0	5.17	7.55	1000

M.2 卡固定座 MOUNT 13-80-4

- MATERIAL: NYLON 66(UL)
- FLAME CLASS: 94V-0/94V-2
- COLOR: NATURAL

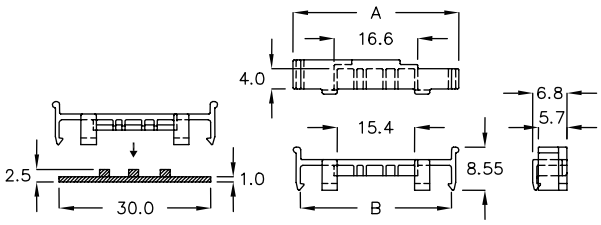

PART NO	A	B	PACKAGE
MRM-31C	32.9	30.1	1000

固定座 MOUNT 13-81-1

- MATERIAL: NYLON 66(UL)
- FLAME CLASS: 94V-0/94V-2
- COLOR: BLACK
  ADHESIVE TAPE:3M

NEW

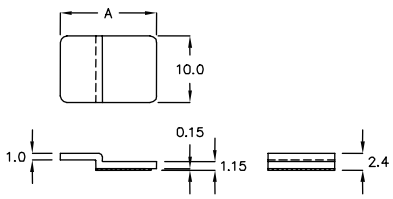

	PART NO	A	PACKAGE
★	MRU−14A	14.5	1000

M.2 卡固定座 MOUNT 13-81-2

- MATERIAL: NYLON 66(UL)
- FLAME CLASS: 94V-0/94V-2
- COLOR: NATURAL

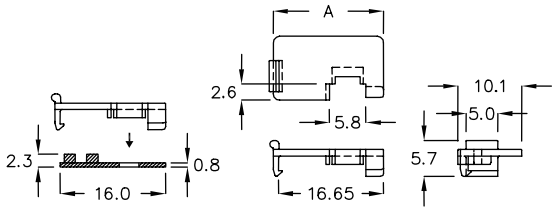

PART NO	A	PACKAGE
MRX−16D	17.5	2000

M.2 卡固定座 MOUNT 13-81-3

- MATERIAL: NYLON 66(UL)
- FLAME CLASS: 94V-0/94V-2
- COLOR: NATURAL

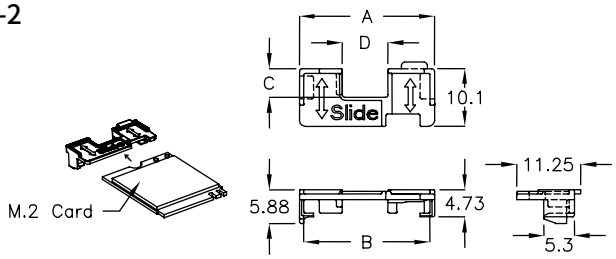

PART NO	A	B	C	D	PACKAGE
MRY−23CL	23.6	22.05	5.05	8.0	2000

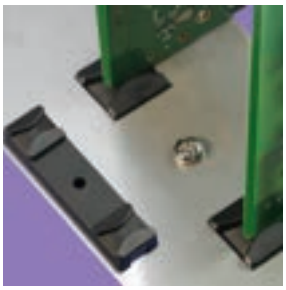

固定座 MOUNT 13-81-4

- MATERIAL: NYLON 66(UL)
- FLAME CLASS: 94V-0/94V-2
- COLOR: BLACK

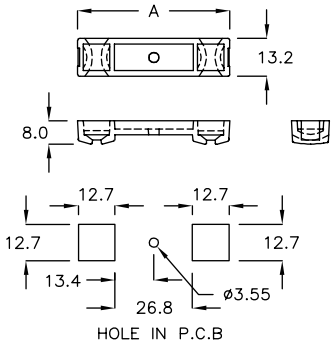

PART NO	A	PACKAGE
CGR−52A	52.7	200

固定座 MOUNT 13-81-5

- MATERIAL: ABS(UL)
- FLAME CLASS: 94HB
- COLOR: BLACK

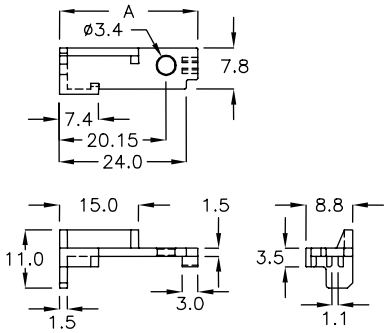

固定座 HOUSING 13-82-1

- MATERIAL: ABS+PC(UL)
- FLAME CLASS: 94V-0
- COLOR: BLACK

PART NO	A	B	PACKAGE
MLW-38HC	38.0	9.0	200

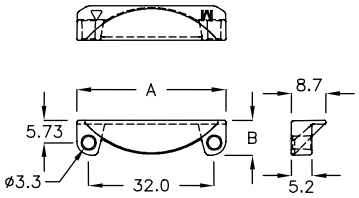

固定座 MOUNT 13-82-2

- MATERIAL: PC(UL)
- FLAME CLASS: 94V-2
- COLOR: BLACK
- ADHESIVE TAPE: 3M

PART NO	A	B	PACKAGE
UAC-12B	11.0	12.55	500

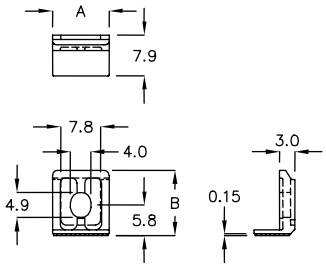

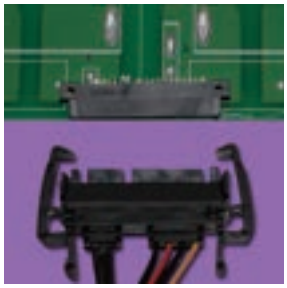

SATA 固定扣 NIFLATCH 13-82-3

- MATERIAL: NYLON 66(UL)
- FLAME CLASS: 94V-0/94V-2
- COLOR: BLACK

PART NO	A	PACKAGE
HPM-56A	60.2	200

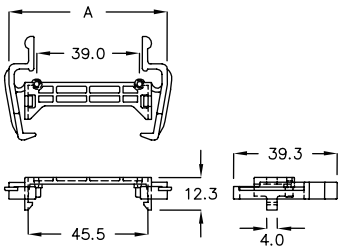

固定座 MOUNT 13-82-4

- MATERIAL: NYLON 66(UL)
- FLAME CLASS: 94V-0/94V-2
- COLOR: NATURAL

PART NO	A	B	T P.C.B. THICKNESS	PACKAGE
MMF-01	18.0	4.5	1.4~1.6	1000

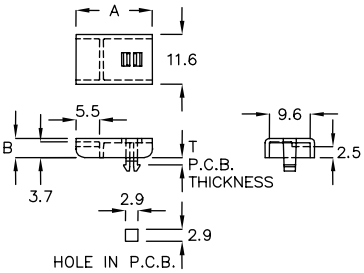

固定座 MOUNT 13-82-5

- MATERIAL: NYLON 66+30%FRP
- FLAME CLASS: 94V-0
- COLOR: BLACK

PART NO	A	B	T P.C.B. THICKNESS	PACKAGE
MMF-1K	18.0	4.5	1.4~1.6	1000

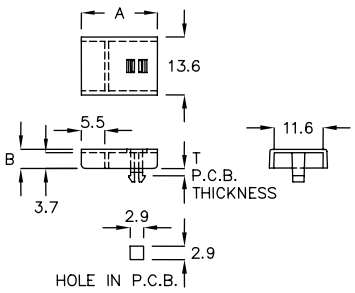

固定座 MOUNT 13-83-1

- MATERIAL: NYLON 66(UL)
- FLAME CLASS: 94V-0/94V-2
- COLOR: BLACK

PART NO	A	PACKAGE
MMFA-20T	14.4	1000

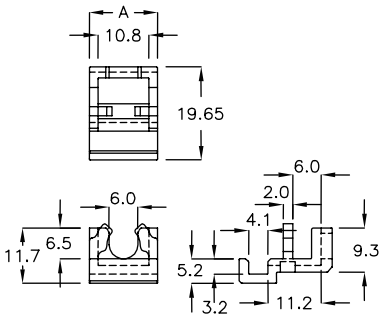

固定座 MOUNT 13-83-2

- MATERIAL: NYLON 66(UL)
- FLAME CLASS: 94V-0/94V-2
- COLOR: BLACK

PART NO	A	B	PACKAGE
MRAT-15M	36.65	31.9	100

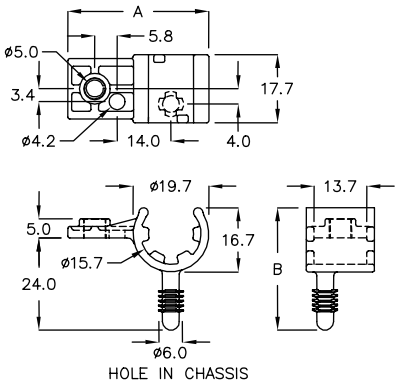

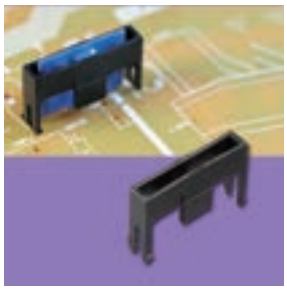

固定座 MOUNT 13-83-3

- MATERIAL: NYLON 66(UL)
- FLAME CLASS: 94V-0/94V-2
- COLOR: BLACK

PART NO	A	B	PACKAGE
MGL-26A	26.1	17.7	500

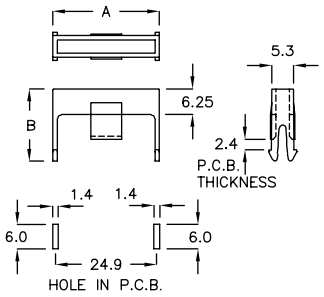

固定座 MOUNT 13-83-4

- MATERIAL: ABS+PC(UL)
- FLAME CLASS: 94V-0
- COLOR: BLACK

PART NO	A	B	PACKAGE
MMS-20	8.4	20.0	1000

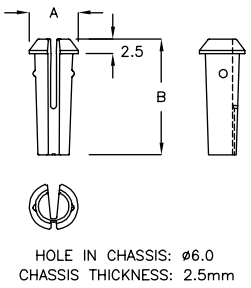

保护盖 HOLE PROTECTOR 13-83-5

- MATERIAL: NYLON 66(UL)
- FLAME CLASS: 94V-0/94V-2
- COLOR: NATURAL

PART NO	A	B	C	PACKAGE
MHY-01	ø16.0	1.5	6.3	1000

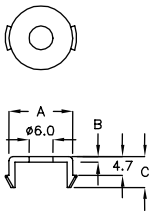

固定座 MOUNT 13-84-1

- MATERIAL: NYLON 66(UL)
- FLAME CLASS: 94V-0/94V-2
- COLOR: NATURAL
- WITH M2 COUNTERSUNK SCREW

NEW

	PART NO	A	PACKAGE
★	MMCA-14A	17.5	500

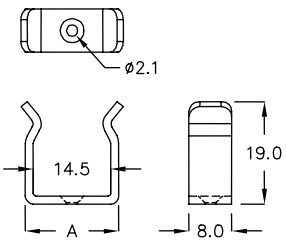

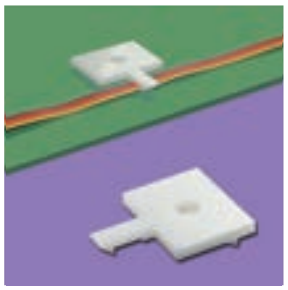

固定座 MOUNT 13-84-2

- MATERIAL: ABS(UL)
- FLAME CLASS: 94HB
- COLOR: NATURAL
- ADHESIVE TAPE: 3M

PART NO	A	PACKAGE
MZT-25	25.0	1000

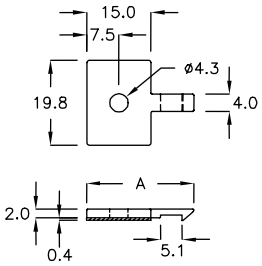

塞头 HOLE PLUG 13-84-3

- MATERIAL: NYLON 66(UL)
- FLAME CLASS: 94V-0/94V-2
- COLOR: BLACK

PART NO	A	B	PACKAGE
P-1	ø12.5	2.0	1000

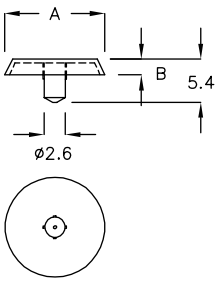

定位销 PIN PLANAR LOCATOR 13-84-4

- MATERIAL: NYLON 66(UL)
- FLAME CLASS: 94V-0/94V-2
- COLOR: NATURAL

PART NO	A	B	PACKAGE
P-5	ø8.5	12.0	1000

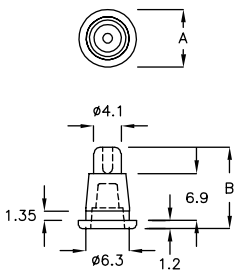

保护盖 PIN HEADER PROTECTOR 13-84-5

- MATERIAL: PBT(UL)
- FLAME CLASS: 94V-0
- COLOR: BLACK

	PART NO	A	B	C	D	PACKAGE
	MGX-6AK	4.95	2.35	0.56	3.3	2000
★	MGX-6BM	7.5	2.35	0.56	5.84	

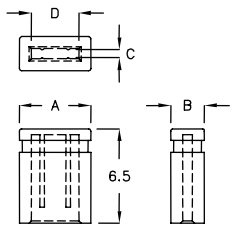

保护盖 PIN HEADER PROTECTOR 13-85-1

NEW

- MATERIAL: NYLON 66(UL)
- FLAME CLASS: 94V-0/94V-2
- COLOR: BLACK

	PART NO	A	B	C	PACKAGE
★	MGX-6CR	6.0	3.4	1.6	2000

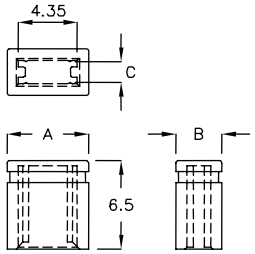

保护盖 PIN HEADER PROTECTOR 13-85-2

- MATERIAL: NYLON 66(UL)
- FLAME CLASS: 94V-0/94V-2
- COLOR: BLACK

PART NO	A	B	C	PACKAGE
MGX-7BL	12.6	4.6	7.5	2000

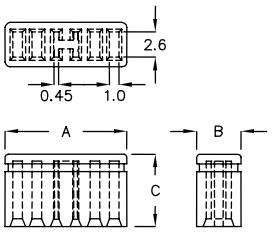

保护盖 PIN HEADER PROTECTOR 13-85-3

- MATERIAL: PBT(UL)
- FLAME CLASS: 94V-0
- COLOR: BLACK

PART NO	A	B	C	PACKAGE
MGX-8CK	8.5	3.0	8.5	2000

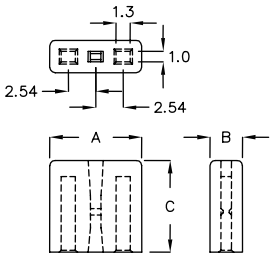

保护盖 PIN HEADER PROTECTOR 13-85-4

- MATERIAL: PBT(UL)
- FLAME CLASS: 94V-0
- COLOR: BLACK

PART NO	A	B	C	PACKAGE
MGX-8MS	12.5	4.35	8.1	2000

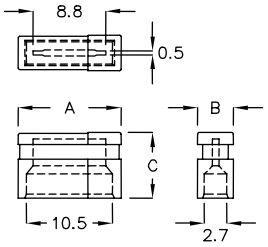

保护盖 PIN HEADER PROTECTOR 13-85-5

- MATERIAL: PBT(UL)
- FLAME CLASS: 94V-0
- COLOR: BLACK

PART NO	A	B	C	PACKAGE
MGX-20FT	20.2	2.35	6.5	1000

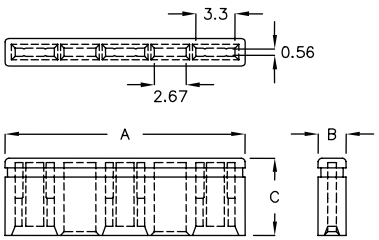

保护盖 HOLE PROTECTOR 13-86-1

- MATERIAL: PP(UL)
- FLAME CLASS: 94V-0
- COLOR: NATURAL

PART NO	A	B	PACKAGE
DXGF-85KB	85.5	7.9	100

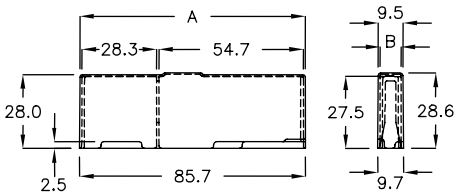

保护盖 HOLE PROTECT COVER 13-86-2

- MATERIAL: PC(UL)
- COLOR: BLACK

PART NO	A	B	C	PACKAGE
MDC-31A	31.8	9.1	9.1	500

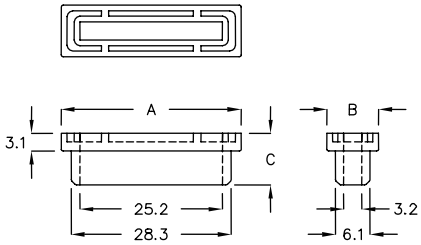

保护盖 HOLE PROTECTOR 13-86-3

- MATERIAL: NYLON 66(UL)
- FLAME CLASS: 94V-0/94V-2
- COLOR: BLACK

PART NO	A	B	C	PACKAGE
MPR-01	82.6	23.9	5.2	100

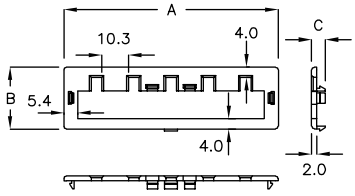

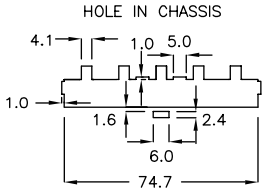

记忆卡保护盖 MEMORY CARD COVER 13-86-4

- MATERIAL: NYLON 66(UL)
- FLAME CLASS: 94V-0/94V-2
- COLOR: BLACK

PART NO	A	B	C	PACKAGE
VFA-02	64.5	61.5	3.1	100

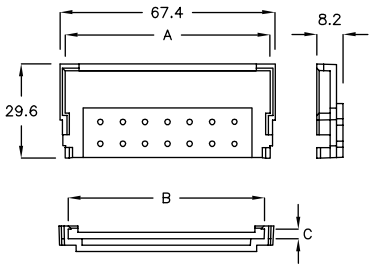

提把 HANDLE 13-86-5

- MATERIAL: ABS(UL)
- FLAME CLASS: 94V-0
- COLOR: BLACK

PART NO	A	B	C	PACKAGE
MKP-91	92.3	52.3	41.7	50

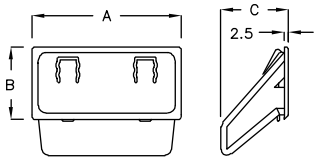

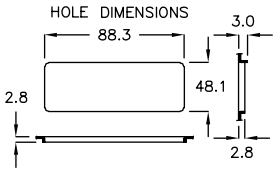

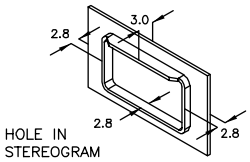

纸箱固定座 CARTON BOX HANDLE 13-87-1

- MATERIAL: PP
- COLOR: NATURAL

PART NO	A	B	C	PACKAGE
MKK-82A	50.0	59.0	54.0	50

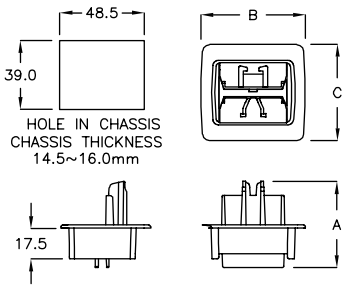

纸箱固定座 CARTON BOX HANDLE 13-87-2

- MATERIAL: PP
- COLOR: NATURAL

PART NO	A	B	C	PACKAGE
MKK-81DZ	51.2	81.0	69.0	50

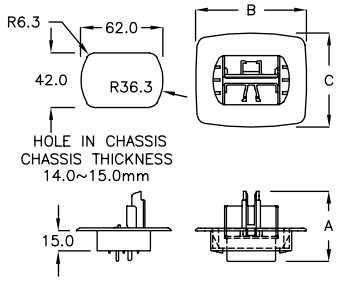

纸箱固定座 CARTON BOX HANDLE 13-87-3

- MATERIAL: PP
- COLOR: NATURAL

PART NO	A	B	PACKAGE
MKK-92	122.0	62.0	10

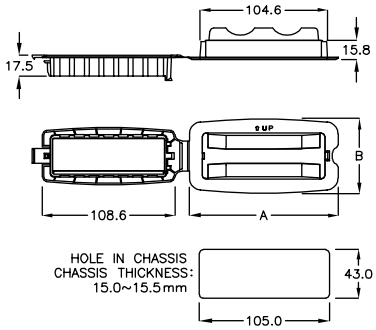

端子座保护盖 TERMINAL COVER 13-87-4

- MATERIAL: NYLON 66(UL)
- FLAME CLASS: 94V-0/94V-2
- COLOR: BLACK

PART NO	A	B	C	PACKAGE
MD-39	36.2	14.9	8.8	100

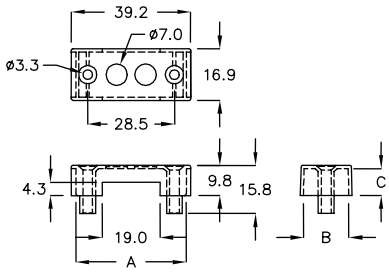

端子座保护盖 TERMINAL COVER 13-87-5

- MATERIAL: NYLON 66(UL)
- FLAME CLASS: 94V-0/94V-2
- COLOR: BLACK

PART NO	A	B	C	PACKAGE
MD-44	40.4	15.9	17.2	100

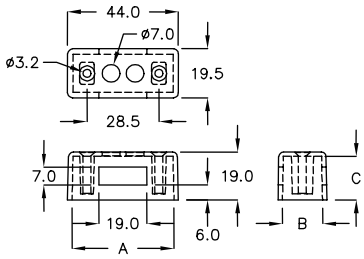

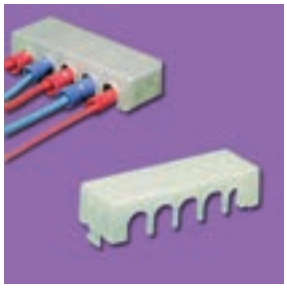

端子座保护盖 TERMINAL COVER —— 13-88-1

- MATERIAL: PC(UL)
- FLAME CLASS: 94V-0
- COLOR: NATURAL

PART NO	A	B	C	PACKAGE
MDW-49A	46.6	17.4	10.5	100

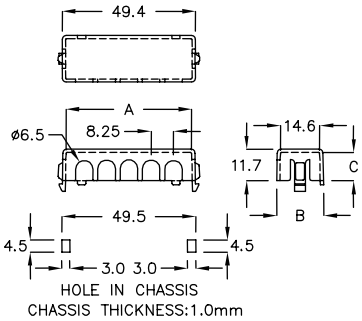

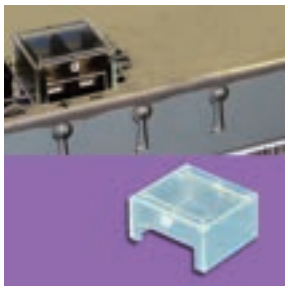

端子座保护盖 DC CONNECTOR COVER —— 13-88-2

- MATERIAL: PC(UL)
- COLOR: CLEAR

PART NO	A	B	C	PACKAGE
HDP-01	27.1	23.9	14.0	200

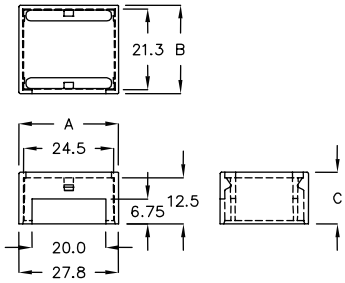

端子固定座 MOUNT —— 13-88-3

- MATERIAL: NYLON 66(UL)
- FLAME CLASS: 94V-0/94V-2
- COLOR: NATURAL

PART NO	A	B	C	PACKAGE
TGB-25K	25.0	12.0	8.0	500

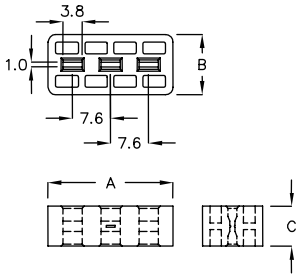

插头绝缘套 SOCKET INSULATOR HOLDER —— 13-88-4

- MATERIAL: NYLON 66(UL)
- FLAME CLASS: 94V-0/94V-2
- COLOR: BLACK

PART NO	A	PACKAGE
MTY-01	28.0	200

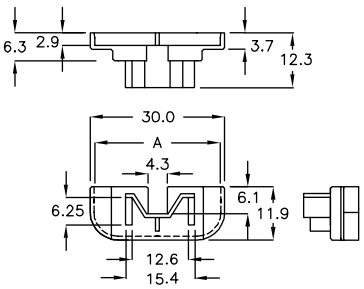

插头绝缘套 SOCKET INSULATOR HOLDER —— 13-88-5

- MATERIAL: NYLON 66(UL)
- FLAME CLASS: 94V-0/94V-2
- COLOR: BLACK

PART NO	A	PACKAGE
MTY-3F	26.7	200

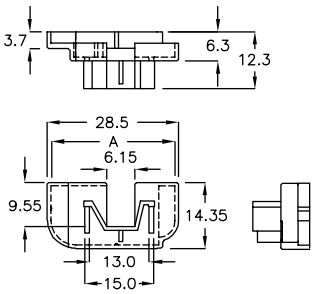

固定座 MOUNT 13-89-1

- MATERIAL: NYLON 46(UL)
- FLAME CLASS: 94V-0/94V-2
- COLOR: BLACK

PART NO	A	PACKAGE
MPG-15A	15.7	500

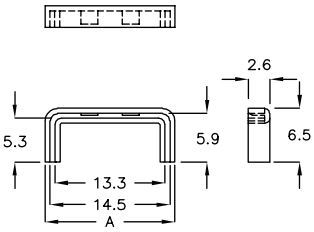

固定座 MOUNT 13-89-2

- MATERIAL: NYLON 46(UL)
- FLAME CLASS: 94V-0/94V-2
- COLOR: BLACK

PART NO	A	PACKAGE
MPG-15WF	15.7	500

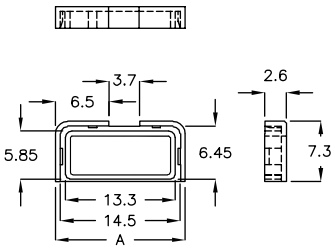

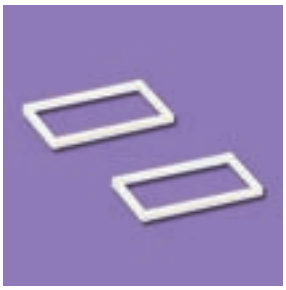

固定座 MOUNT 13-89-3

- MATERIAL: NYLON 66(UL)
- FLAME CLASS: 94V-0/94V-2
- COLOR: NATURAL

PART NO	A	PACKAGE
MWJ-16	16.0	1000

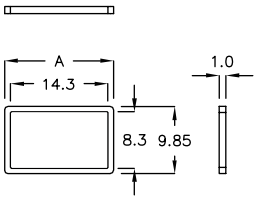

销 PIN 13-89-4

- MATERIAL: NYLON 66(UL)
- FLAME CLASS: 94V-0/94V-2
- COLOR: NATURAL

PART NO	A	B	PACKAGE
PIN-13	13.0	ø2.0	1000

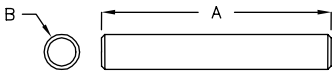

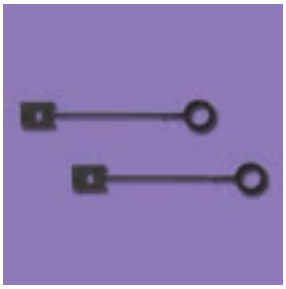

固定座 STRAP TIE 13-89-5

- MATERIAL: NYLON 66(UL)
- FLAME CLASS: 94V-0/94V-2
- COLOR: BLACK

PART NO	A	PACKAGE
BFA-40	39.6	500

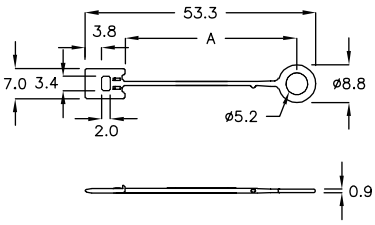

固定带 STRAP TIE 13-90-1

- MATERIAL: NYLON 66(UL)
- FLAME CLASS: 94V-0/94V-2
- COLOR: NATURAL

PART NO	A	PACKAGE
TPW-40A	40.5	2000

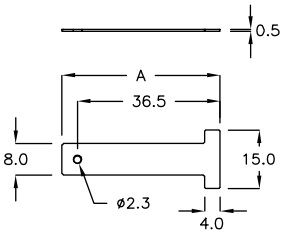

固定座 MOUNT 13-90-2

- MATERIAL: NYLON 66(UL)
- FLAME CLASS: 94V-0/94V-2
- COLOR: NATURAL

NEW

	PART NO	A	B	PACKAGE
★	MMJA-22A	19.2	22.3	200

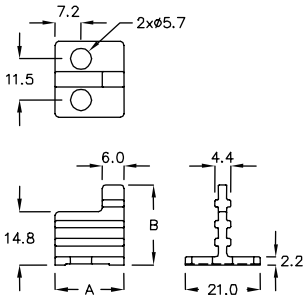

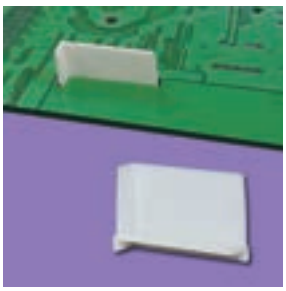

固定座 MOUNT 13-90-3

- MATERIAL: NYLON 66(UL)
- FLAME CLASS: 94V-0/94V-2
- COLOR: NATURAL

PART NO	A	B	PACKAGE
MPB-03	15.0	3.0	1000

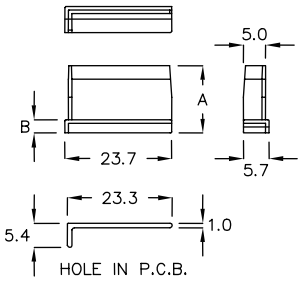

固定座 MOUNT 13-90-4

- MATERIAL: PC(UL)
- COLOR: BLACK

PART NO	A	B	PACKAGE
MPB-12FC	7.5	2.3	1000

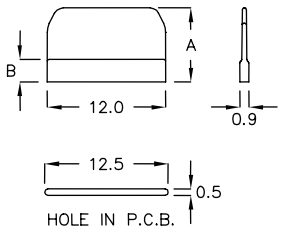

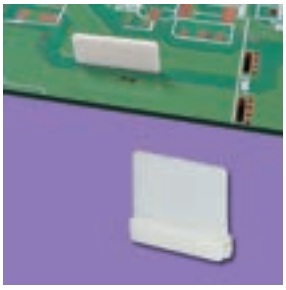

固定座 MOUNT 13-90-5

- MATERIAL: NYLON 66(UL)
- FLAME CLASS: 94V-0/94V-2
- COLOR: NATURAL

PART NO	A	B	PACKAGE
MPB-3A	11.0	3.0	500

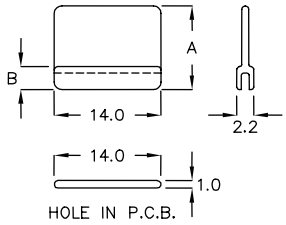

固定座 MOUNT 13-91-1

- MATERIAL: NYLON 66(UL)
- FLAME CLASS: 94V-0/94V-2
- COLOR: NATURAL

PART NO	A	B	PACKAGE
MPB-8ST	9.2	2.7	1000

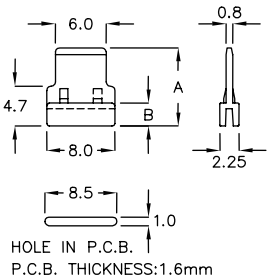

固定座 MOUNT 13-91-2

- MATERIAL: NYLON 66(UL)
- FLAME CLASS: 94V-0/94V-2
- COLOR: NATURAL, BLACK

PART NO	A	B	C	E	F	G	PACKAGE
MPB-9FT	9.0	2.0	9.0	4.65	9.5	1.1	1000
MPB-10GK	10.0	2.0	9.7	4.2	10.2	1.0	

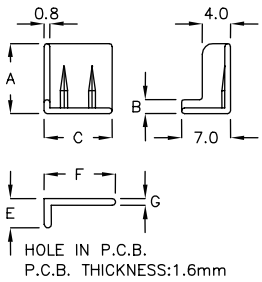

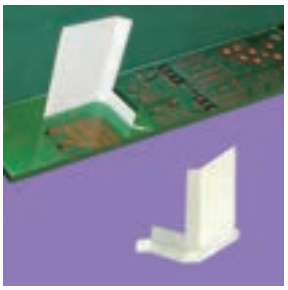

固定座 MOUNT 13-91-3

- MATERIAL: NYLON 66+30%FRP
- FLAME CLASS: 94V-0
- COLOR: NATURAL

PART NO	A	B	PACKAGE
MPB-4A	30.2	2.95	500

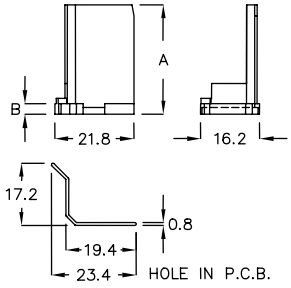

固定座 MOUNT 13-91-4

- MATERIAL: NYLON 66(UL)
- FLAME CLASS: 94V-0/94V-2
- COLOR: NATURAL

PART NO	A	B	PACKAGE
MPB-15GK	13.6	2.2	500

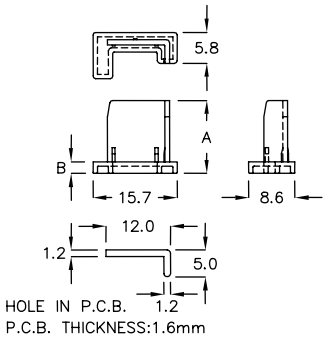

固定座 MOUNT 13-91-5

- MATERIAL: NYLON 66(UL)
- FLAME CLASS: 94V-0/94V-2
- COLOR: BLACK

PART NO	A	B	PACKAGE
MPB-18MD	21.4	0.45	500

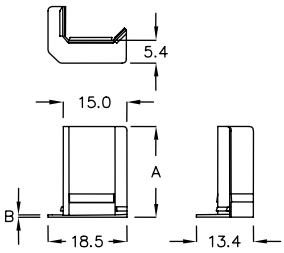

固定座 MOUNT 13-92-1

- MATERIAL: NYLON 66(UL)
- FLAME CLASS: 94V-0/94V-2
- COLOR: BLACK

PART NO	A	B	PACKAGE
MPB-18PQ	21.4	0.45	500

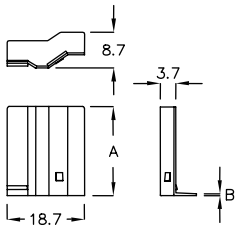

固定座 MOUNT 13-92-2

- MATERIAL: NYLON 66(UL)
- FLAME CLASS: 94V-0/94V-2
- COLOR: NATURAL

PART NO	A	B	PACKAGE
MPB-18CR	23.2	1.8	500

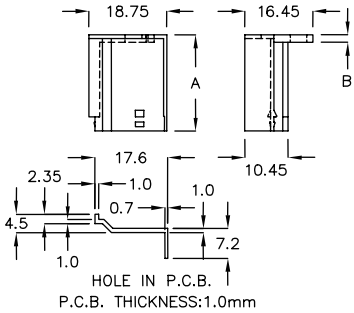

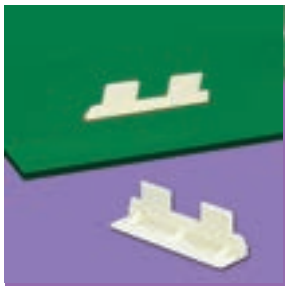

固定座 MOUNT 13-92-3

- MATERIAL: NYLON 66(UL)
- FLAME CLASS: 94V-0/94V-2
- COLOR: NATURAL

PART NO	A	B	PACKAGE
MPB-29LY	9.2	2.7	500

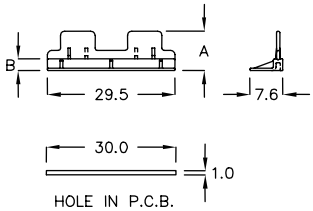

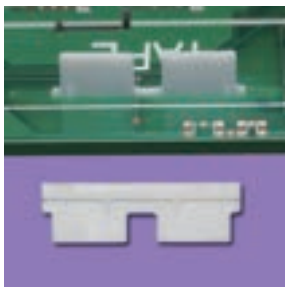

固定座 MOUNT 13-92-4

- MATERIAL: NYLON 66(UL)
- FLAME CLASS: 94V-0/94V-2
- COLOR: NATURAL

PART NO	A	B	PACKAGE
MPB-30KM	9.2	2.7	500

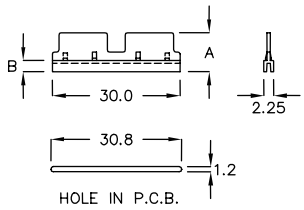

固定座 MOUNT 13-92-5

- MATERIAL: NYLON 66(UL)
- FLAME CLASS: 94V-0/94V-2
- COLOR: NATURAL

PART NO	A	B	PACKAGE
MPB-42QW	6.8	2.7	500

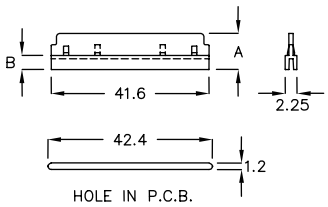

固定座 MOUNT 13-93-1

- MATERIAL: NYLON 66(UL)
- FLAME CLASS: 94V-0/94V-2
- COLOR: NATURAL

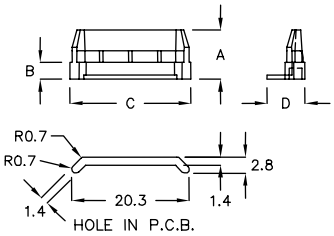

PART NO	A	B	C	D	PACKAGE
MPB−21HT	8.5	2.9	20.9	6.5	1000

固定座 MOUNT 13-93-2

- COLOR: NATURAL

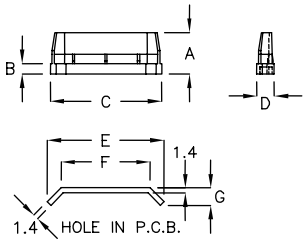

PART NO	MATERIAL	A	B	C	D	E	F	G	PACKAGE
MPB−27SQ	N66 94V−0	8.25	2.15	27.6	4.9	29.5	22.3	4.6	500
MPB−30J	N66 94V−0	11.55	2.95	30.8	4.8	32.4	24.6	4.9	
MPB−32HW	N66 94V−0	9.05	2.95	32.8	4.9	33.0	25.8	4.6	
MPB−32K	N66+30%FRP	11.55	2.95	32.8	4.9	33.0	25.8	4.6	

固定座 MOUNT 13-93-3

MPB-15M
- MATERIAL: NYLON 66(UL)
- FLAME CLASS: 94V-0/94V-2
- COLOR: NATURAL

MPB-23R/MPB-23KD
- MATERIAL: PPS(UL)
- FLAME CLASS: 94V-0
- COLOR: BLACK

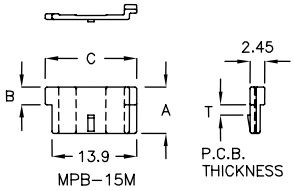

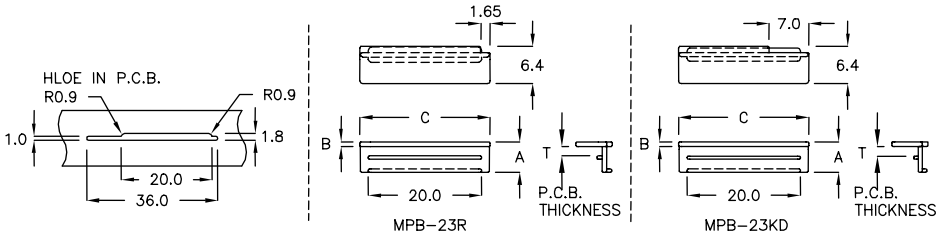

PART NO	A	B	C	T CHASSIS THICKNESS	PACKAGE
MPB−15M	7.4	2.8	15.0	1.6	1000
MPB−23R	5.3	0.8	23.0	1.6	500
MPB−23KD	5.3	0.8	23.0	1.6	

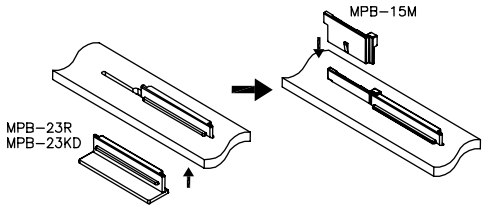

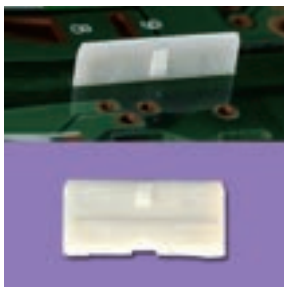

固定座 MOUNT 13-94-1

- MATERIAL: NYLON 66(UL)
- FLAME CLASS: 94V-0/94V-2
- COLOR: NATURAL

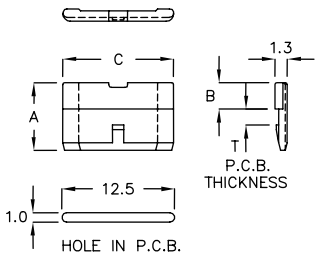

PART NO	A	B	C	T P.C.B. THICKNESS	PACKAGE
MPB-11TN	7.2	2.8	12.0	1.6	1000
MPB-11GL	14.0	2.8	12.0	1.6	500

固定座 MOUNT 13-94-2

- MATERIAL: PPS(UL)
- FLAME CLASS: 94V-0
- COLOR: BLACK

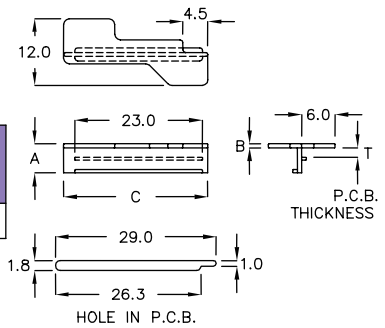

PART NO	A	B	C	T P.C.B. THICKNESS	PACKAGE
MPB-26CK	5.3	0.7	26.0	1.6	500

固定座 MOUNT 13-94-3

- MATERIAL: NYLON 66(UL)
- FLAME CLASS: 94V-0/94V-2
- COLOR: NATURAL

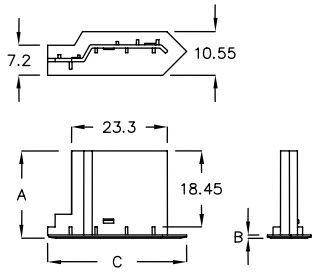

PART NO	A	B	C	PACKAGE
MPB-35TK	21.1	0.8	33.5	500

固定座 MOUNT 13-94-4

- MATERIAL: PC(UL)
- COLOR: BLACK
- ADHESIVE TAPE: JUSTAPE

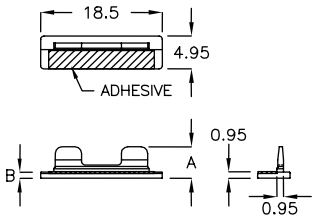

PART NO	A	B	PACKAGE
HCHA-18M	4.8	0.9	1000

固定座 MOUNT 13-94-5

- MATERIAL: NYLON 66(UL)
- FLAME CLASS: 94V-0/94V-2
- COLOR: BLACK
- ADHESIVE TAPE: 3M

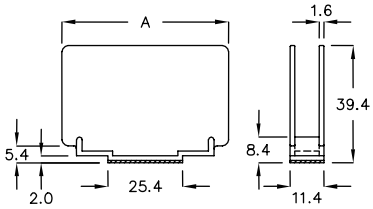

PART NO	A	PACKAGE
MPBH-56K	56.5	100

固定座 MOUNT 13-95-1

- MATERIAL: NYLON 66(UL)
- FLAME CLASS: 94V-0/94V-2
- COLOR: BLACK
- ADHESIVE TAPE: 3M

PART NO	A	PACKAGE
MPBL-56A	56.5	100

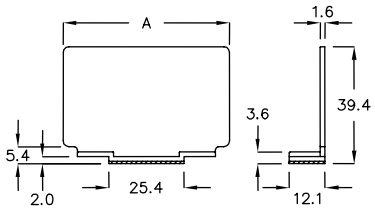

固定座 MOUNT 13-95-2

- MATERIAL: NYLON 66(UL)
- FLAME CLASS: 94V-0/94V-2
- COLOR: BLACK
- ADHESIVE TAPE: 3M

PART NO	A	PACKAGE
MPBT-46C	46.8	100

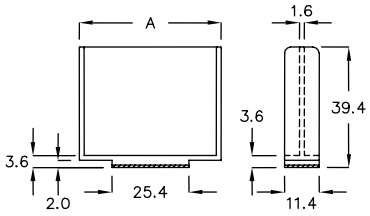

固定座 MOUNT 13-95-3

- MATERIAL: POM(UL)
- FLAME CLASS: 94HB
- COLOR: NATURAL

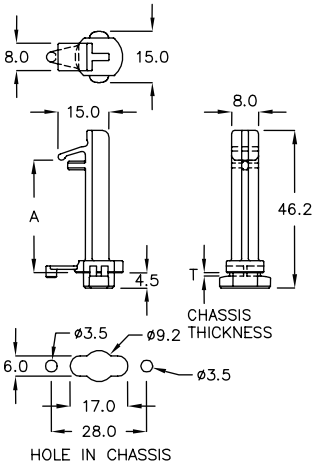

INSERT WITH 90 DEGREE ANGLE AND PRESS DOWN

PART NO	A	T CHASSIS THICKNESS	PACKAGE
MGS-46CH	32.9	1.0	100

PIN 固定座 PIN MOUNT 13-95-4

- MATERIAL: NYLON 66+30%FRP
- FLAME CLASS: 94V-0
- COLOR: BLACK

PART NO	A	PACKAGE
DC-01	2.7	500

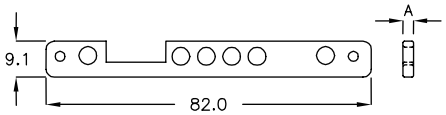

PIN 固定座 PIN MOUNT 13-95-5

- MATERIAL: NYLON 66+30%FRP
- FLAME CLASS: 94V-0
- COLOR: BLACK

PART NO	A	PACKAGE
DC-02	2.7	500

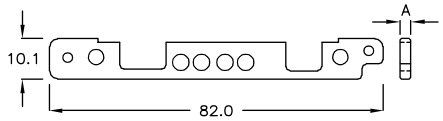

PIN 固定座 PIN MOUNT 13-96-1

- MATERIAL: NYLON 66+30%FRP
- FLAME CLASS: 94V-0
- COLOR: BLACK

PART NO	A	PACKAGE
DC-2Q	2.6	200

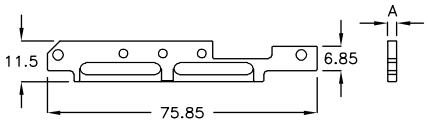

PIN 固定座 PIN MOUNT 13-96-2

- MATERIAL: NYLON 66+30%FRP
- FLAME CLASS: 94V-0
- COLOR: BLACK

PART NO	A	PACKAGE
DC-2RM	2.7	200

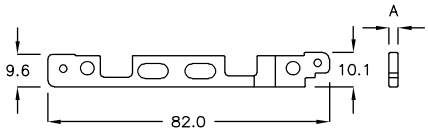

PIN 固定座 PIN MOUNT 13-96-3

- MATERIAL: NYLON 46(UL)
- FLAME CLASS: 94V-0/94V-2
- COLOR: BLACK

PART NO	A	PACKAGE
DC-3F	2.6	200

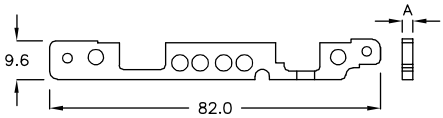

PIN 固定座 PIN MOUNT 13-96-4

- MATERIAL: NYLON 46(UL)
- FLAME CLASS: 94V-0/94V-2
- COLOR: BLACK

PART NO	A	PACKAGE
DC-2H	2.6	200

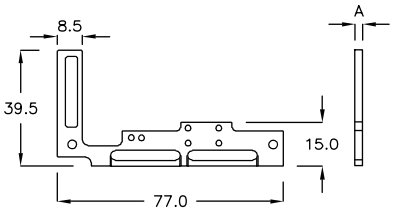

PIN 固定座 PIN MOUNT 13-96-5

- MATERIAL: PPS
- FLAME CLASS: 94V-0
- COLOR: BLACK

PART NO	A	PACKAGE
DC-4LS	2.7	200

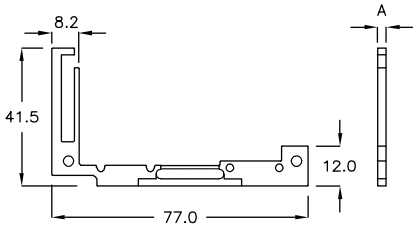

PIN 固定座 PIN MOUNT 13-97-1

- MATERIAL: NYLON 66+30%FRP
- FLAME CLASS: 94V-0
- COLOR: BLACK

PART NO	A	PACKAGE
DC-4QF	2.6	200

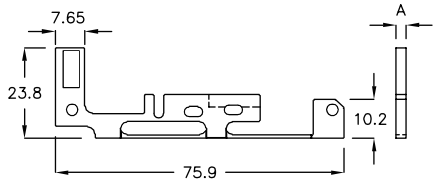

PIN 固定座 PIN MOUNT 13-97-2

- MATERIAL: NYLON 66+30%FRP
- FLAME CLASS: 94V-0
- COLOR: BLACK

PART NO	A	PACKAGE
DC-4RK	2.6	200

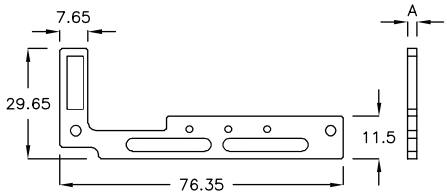

PIN 固定座 PIN MOUNT 13-97-3

- MATERIAL: NYLON 66+30%FRP
- FLAME CLASS: 94V-0
- COLOR: BLACK

PART NO	A	PACKAGE
DC-5MA	2.7	200

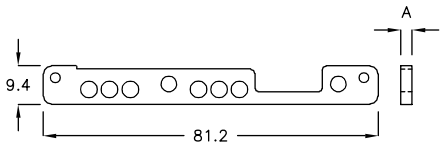

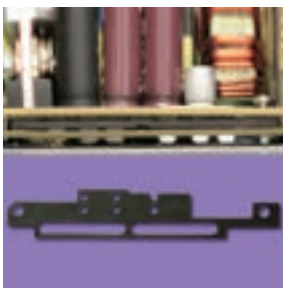

PIN 固定座 PIN MOUNT 13-97-4

- MATERIAL: NYLON 46(UL)
- FLAME CLASS: 94V-0/94V-2
- COLOR: BLACK

PART NO	A	PACKAGE
DC-6CN	2.7	200

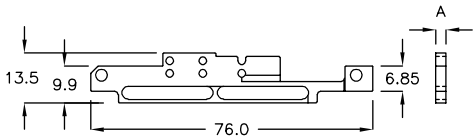

PIN 固定座 PIN MOUNT 13-97-5

- MATERIAL: NYLON 46(UL)
- FLAME CLASS: 94V-0/94V-2
- COLOR: BLACK

PART NO	A	PACKAGE
DC-7XK	2.6	200

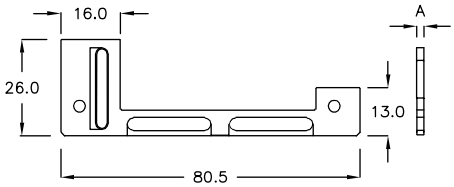

灯帽 LAMP TUBE CAP 13-98-1

- MATERIAL: PC
- FLAME CLASS: 94V-0
- COLOR: WHITE

FOR T9 LAMP				
PART NO	A	B	C	PACKAGE
T9A-3C	20.0	18.8	7.1	100

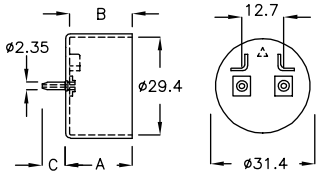

垫圈 GASKET 13-98-2

- MATERIAL: SILICONE
- FLAME CLASS: 94V-0
- COLOR: BLACK

PART NO	A	PACKAGE
LRA-60	1.7	500

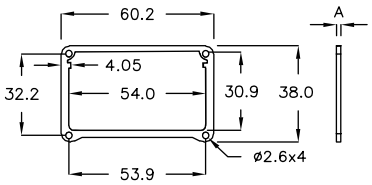

垫片 SILICONE PAD 13-98-3

- MATERIAL: SILICONE
- FLAME CLASS: 94V-0
- COLOR: BLACK

PART NO	A	PACKAGE
GCA-66	0.8	200

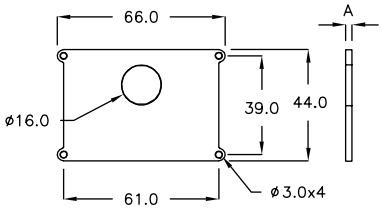

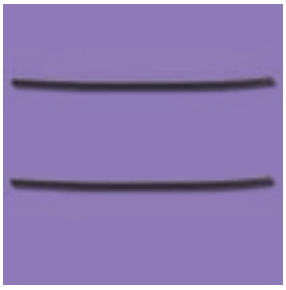

胶条 SILICONE TIE 13-98-4

- MATERIAL: SILICONE
- COLOR: BLACK

PART NO	A	PACKAGE
LPL-2D	ø1.0	500

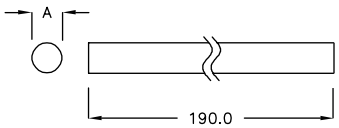

固定座 MOUNT 13-98-5

- MATERIAL: ABS+PC(UL)
- FLAME CLASS: 94V-0
- COLOR: NATURAL,BLACK

PART NO	A	PACKAGE
MPW-24Q	16.0	200

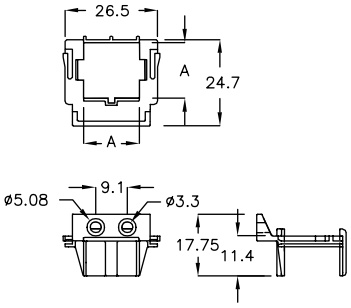

固定座 MOUNT 13-99-1

- MATERIAL: NYLON 66(UL)
- FLAME CLASS: 94V-0/94V-2
- COLOR: NATURAL

PART NO	A	B	C	PACKAGE
MDD-21H	21.5	19.0	1.5	500

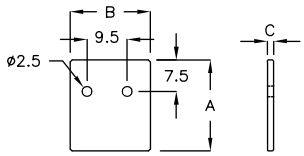

防尘盖 COVER 13-99-2

- MATERIAL: NYLON 66(UL)
- FLAME CLASS: 94V-0/94V-2
- COLOR: BLACK

PART NO	A	B	C	PACKAGE
DUA-103C	84.4	103.2	97.0	20
DUA-105K	84.4	105.2	98.9	

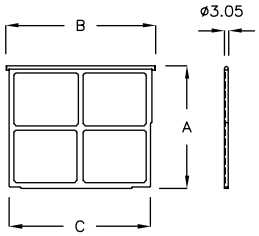

固定座 MOUNT 13-99-3

- MATERIAL: ABS+PC(UL)
- FLAMECLASS: 94V-0
- COLOR: BLACK

PART NO	A	B	C CHASSIS THICKNESS	PACKAGE
MGW-75	14.6	75.0	1.6	100

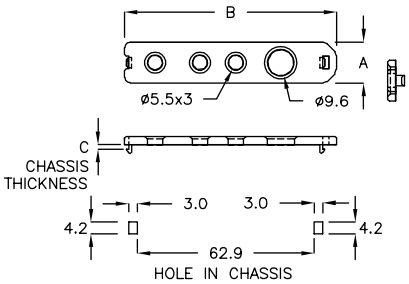

固定带 STRAP MOUNT 13-99-4

- MATERIAL: SILICONE
- FLAME CLASS: 94V-0
- COLOR: BLACK

PART NO	A	PACKAGE
DHM-25A	16.7	1000

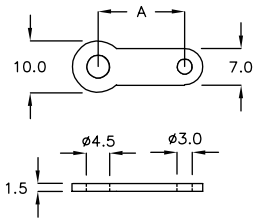

固定座 MOUNT 13-99-5

- MATERIAL: NYLON 66(UL)
- FLAME CLASS: 94V-0/94V-2
- COLOR: NATURAL

PART NO	A	B	C	PACKAGE
MPV-86GT	33.5	49.15	86.25	50

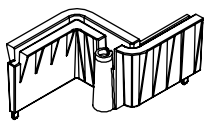

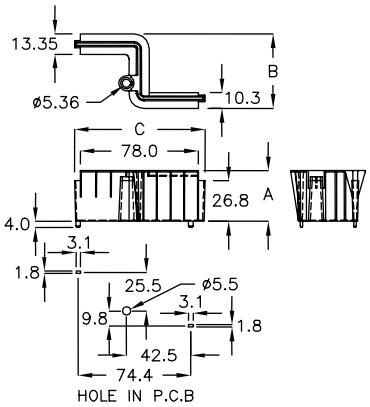

电源保护盖 COVER 13-100-1

- MATERIAL: ABS+PC(UL)
- FLAME CLASS: 94V-0
- COLOR: BLACK

PART NO	A	B	PACKAGE
MXF-44GN	45.7	39.35	20

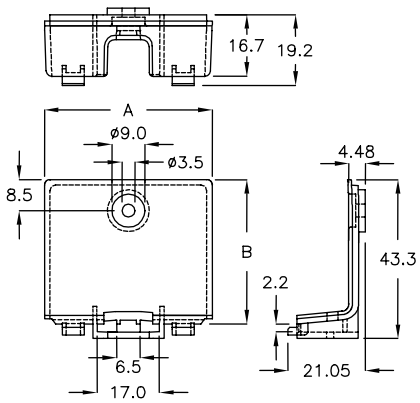

电源保护盖 COVER 13-100-2

- MATERIAL: ABS+PC(UL)
- FLAME CLASS: 94V-0
- COLOR: BLACK

PART NO	A	B	PACKAGE
MXF-53TK	53.7	41.0	20

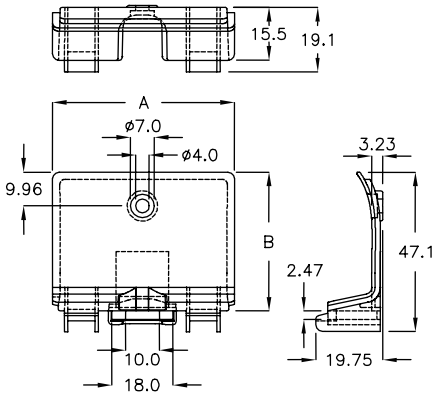

光纤固定座 OPTICAL FIBER MOUNT 13-100-3

- MATERIAL: NYLON 66(UL)
- FLAME CLASS: 94V-0/94V-2
- COLOR: NATURAL

PART NO	A	B	C	PACKAGE
VVC-55F	54.8	ø35.0	9.5	200

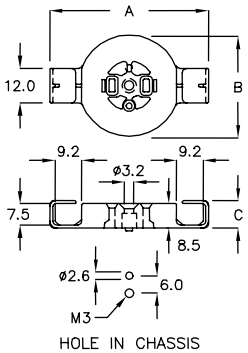

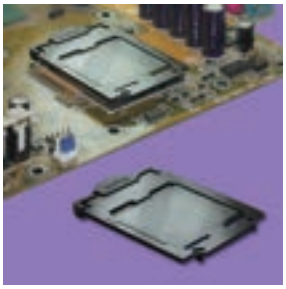

CPU 插座盖 CPU SOCKET COVER 13-100-4

- MATERIAL: PC(UL)
- COLOR: BLACK

PART NO	A	B	PACKAGE
HFX-61CP	61.0	44.0	100

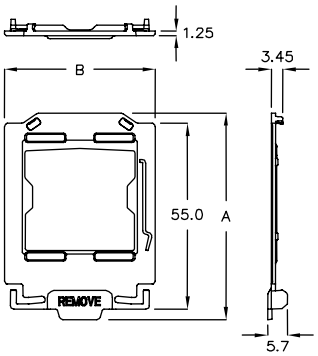

电池盒 BATTERY BRACKET 13-101-1

- MATERIAL: NYLON 66(UL)
- FLAME CLASS: 94V-0/94V-2
- COLOR: BLACK
- USE M3 SCREW

PART NO	A	B	PACKAGE
MVJ-65H	73.5	55.8	50

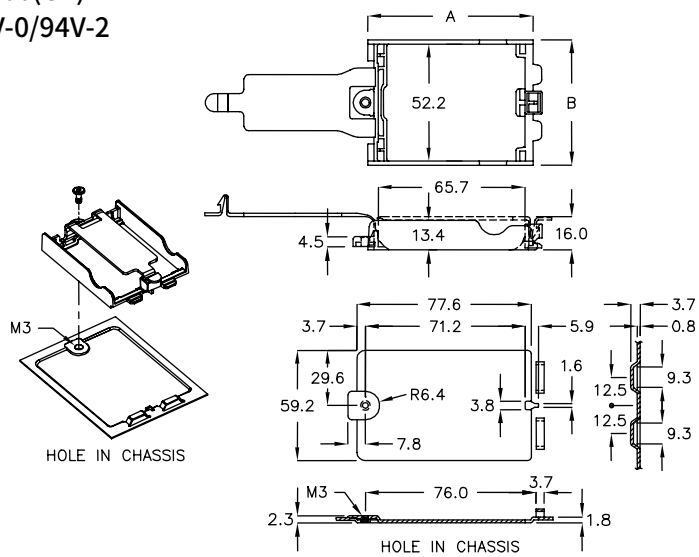

返回图片索引

其他塑胶制品 HANDLE, HOUSING, COVER

13

14

端子附件
CONNECTORS

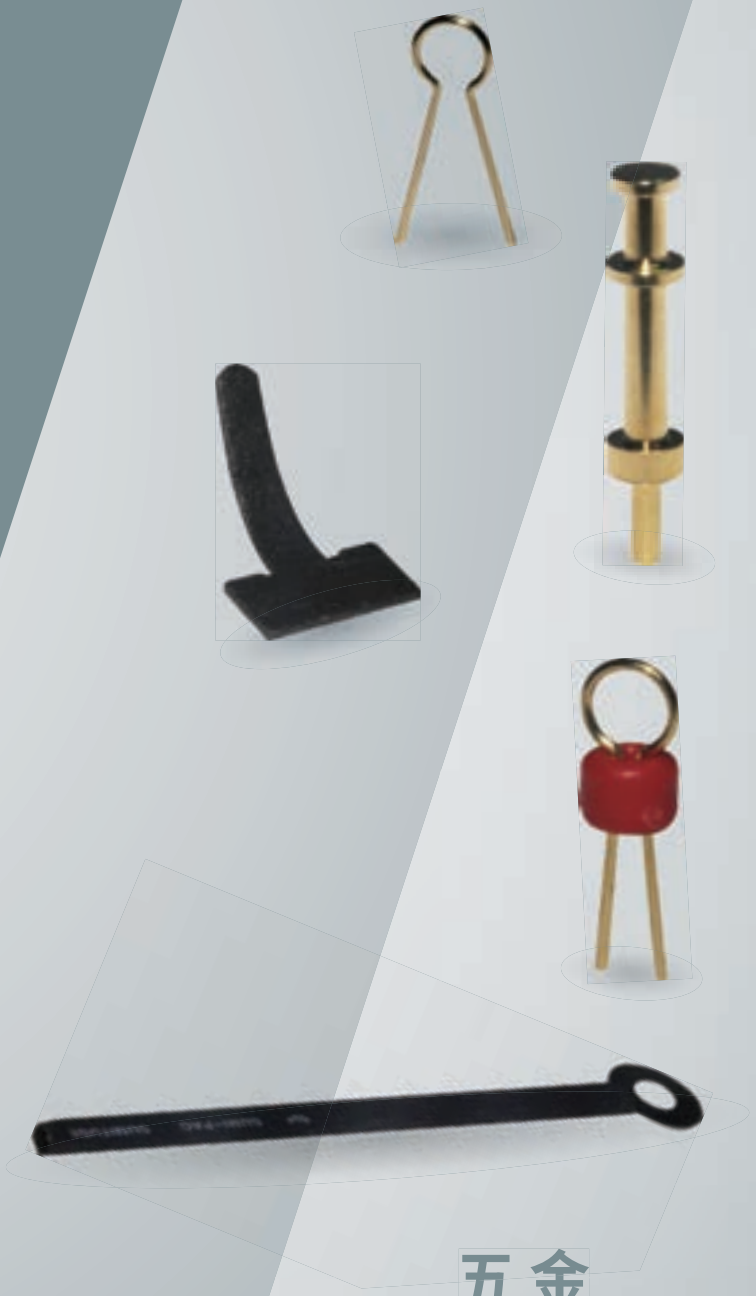

五金

WIRE CLIPS, TEST PIN

端子隔离座 CONNECTOR SADDLE 14-2-1

- MATERIAL: NYLON 66(UL)
- FLAME CLASS: 94V-0/94V-2
- COLOR: BLACK

PART NO	A	B	PACKAGE
P-2	8.7	3.5	1000
P-2C	8.7	4.5	
★ P-2KT	8.7	6.0	

TO BE USED WITH P.G. PART JH-8 (Page 14-4-1)

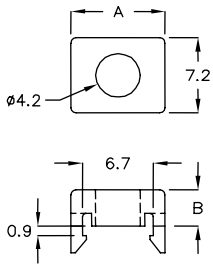

测试点 TEST PIN 14-2-2

- MATERIAL: PHOSPHOR BRONZE WIRE
- PLATING: GOLD
- COLOR: GOLD
- HOLE IN P.C.B.: Φ0.9~Φ1.0

PART NO	A	B	C	PACKAGE
JT-0	9.5	8.1	ø2.8	1000
JT-1S	10.65	8.75	ø3.8	

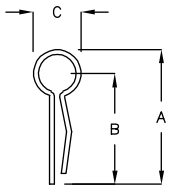

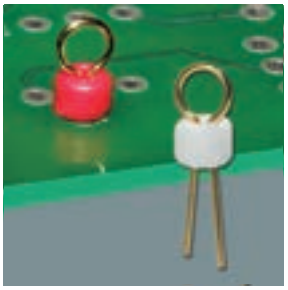

测试点 TEST PIN 14-2-3

- MATERIAL: PHOSPHOR BRONZE WIRE
- PLATING: GOLD
- PLASTIC MATERIAL: PBT
- COLOR: RED,YELLOW,GREEN BLUE,BLACK,WHITE
- HOLE IN P.C.B.: Φ0.9~Φ1.0

PART NO	A	C	D	PACKAGE
JT-1P	5.0~6.0	ø3.1	2.2	1000

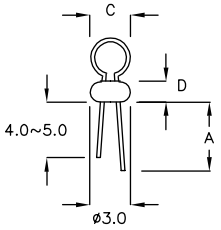

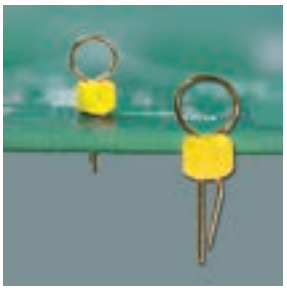

测试点 TEST PIN 14-2-4

- MATERIAL: PHOSPHOR BRONZE WIRE
- PLATING: GOLD
- PLASTIC MATERIAL: PBT
- COLOR: GOLD,YELLOW
- HOLE IN P.C.B.: Φ0.9~Φ1.0

PART NO	A	C	D	PACKAGE
JT-1Q	3.6~4.0	ø3.1	3.3	1000

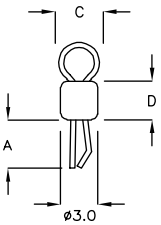

测试点 TEST PIN 14-2-5

- MATERIAL: PHOSPHOR BRONZE WIRE
- PLATING: GOLD
- COLOR: GOLD
- HOLE IN P.C.B.: Φ0.9~Φ1.0

PART NO	A	B	C	PACKAGE
JT-1N	10.2	8.55	ø3.3	1000

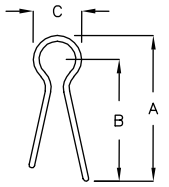

返回图片索引

测试点 TEST PIN 14-3-1

- MATERIAL: BRASS
- PLATING: GOLD
- COLOR: GOLD

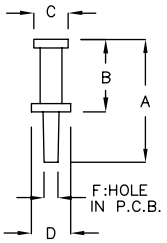

PART NO	A	B	C	D	F	PACKAGE
JT-8	7.9	4.7	ø2.2	ø2.5	ø1.0	1000

测试点 TEST PIN 14-3-2

- MATERIAL: BRASS
- PLATING: GOLD
- COLOR: GOLD

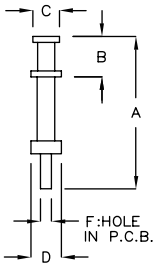

PART NO	A	B	C	D	F	PACKAGE
JT-13	13.0	3.45	ø2.2	ø2.5	ø0.9	1000

测试点 TEST PIN 14-3-3

- MATERIAL: BRASS
- PLATING: TIN

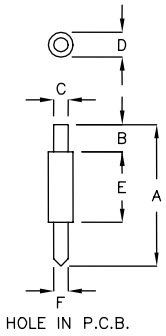

PART NO	A	B	C	D	E	F HOLE IN P.C.B.	PACKAGE
JT-08D	8.5	2.0	ø1.0	ø1.8	2.0	ø1.05	1000
JT-9A	9.5	1.0	ø1.0	ø1.8	5.0	ø1.05	
JT-9DM	9.0	2.5	ø2.0	ø2.8	2.0	ø2.05	
JT-10	10.0	2.0	ø1.04	ø1.8	4.5	ø1.05	

端子 CONNECTOR 14-3-4

- MATERIAL: BRASS
- PLATING: TIN

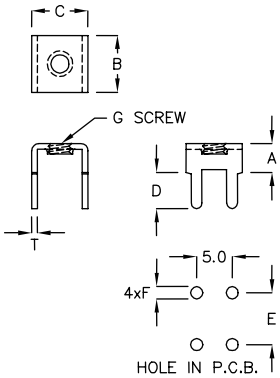

PART NO	A	B	C	D	E	F	G SCREW	T	PACKAGE
JH-4A	4.0	7.9	7.9	2.5	7.2	ø1.75	M3	0.8	500
JH-4	4.0	7.9	7.9	5.0	7.2	ø1.75	M3	0.8	
JH-4L	8.5	9.2	11.2	4.0	10.1	ø1.8	M4	1.0	200
JH-04K	8.5	9.0	11.1	4.0	10.15	ø1.8	M5	1.0	
JH-5	5.0	9.2	11.2	4.0	10.15	ø1.85	M4	1.0	500

端子 CONNECTOR 14-4-1

- MATERIAL: BRASS
- PLATING: TIN
- C: SCREW

PART NO	A	B	G SCREW	PACKAGE
JH-8	8.0	11.4	M4	500
JH-8M3	8.0	11.4	M3	

TO BE USED WITH P.G. PART P-2 (Page 14-2-1)

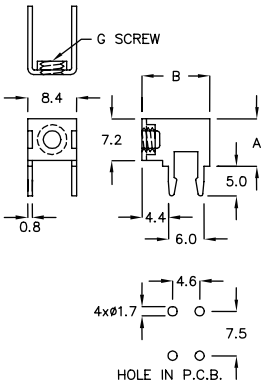

端子 CONNECTOR 14-4-2

- MATERIAL: BRASS
- PLATING: TIN

PART NO	A	F	T	PACKAGE
JP-13T	13.1	ø1.4	0.8	2000

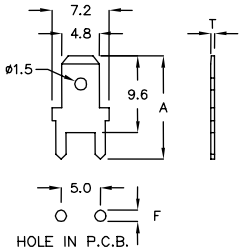

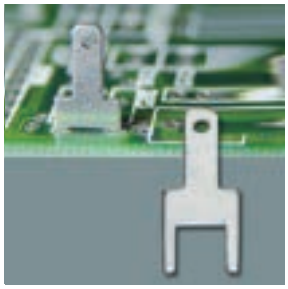

端子 CONNECTOR 14-4-3

- MATERIAL: BRASS
- PLATING: TIN

PART NO	A	T	PACKAGE
JP-14A	14.1	0.5	2000

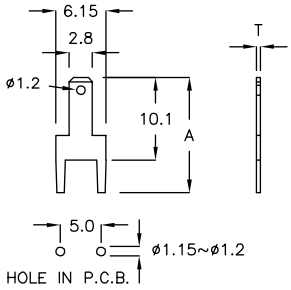

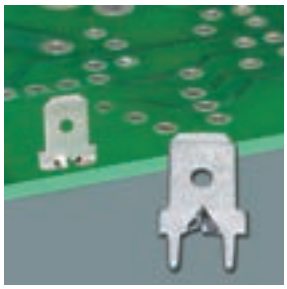

端子 CONNECTOR 14-4-4

- MATERIAL: BRASS
- PLATING: TIN

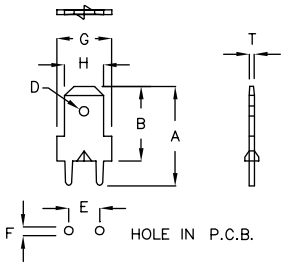

PART NO	A	B	D	E	F	G	H	T	PACKAGE
JP-14B	13.7	10.2	ø1.7	5.0	ø1.48	8.2	6.3	0.8	2000
JP-14C	14.1	10.7	ø1.8	5.0	ø1.43	8.6	6.3	0.8	
JP-16B	16.2	12.2	ø1.6	5.0	ø1.38	8.8	6.3	0.8	

端子 CONNECTOR 14-4-5

- MATERIAL: BRASS
- PLATING: TIN

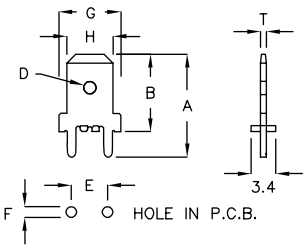

PART NO	A	B	D	E	F	G	H	T	PACKAGE
JP-14P	14.1	10.6	ø1.8	5.0	ø1.5	8.5	6.4	0.8	1000

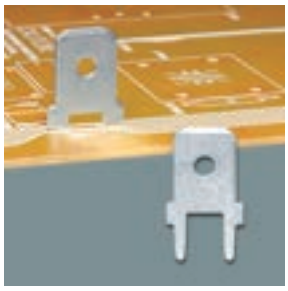

端子 CONNECTOR 14-5-1

- MATERIAL: BRASS
- PLATING: TIN

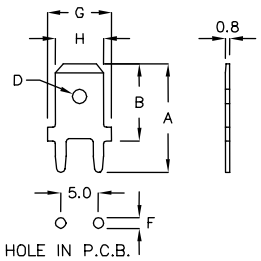

PART NO	A	B	D	F	G	H	PACKAGE
JP−14	14.0	10.2	ø2.0	ø1.35~ø1.4	8.0	6.4	2000
JP−16A	16.3	12.3	ø1.6	ø1.7	9.0	6.5	

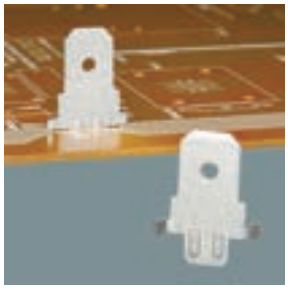

端子 CONNECTOR 14-5-2

- MATERIAL: BRASS
- PLATING: TIN

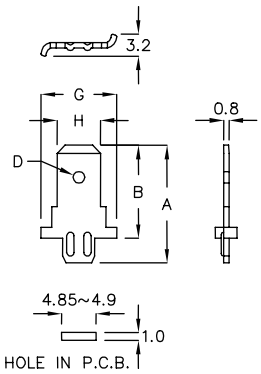

PART NO	A	B	D	G	H	PACKAGE
JP−16D	16.35	12.75	ø1.7	11.1	6.4	2000

电线固定片 LOCKING CABLE CLIP 14-5-3

- MATERIAL: SPTE+HEAT SHRINKING TUBE
  or SECC+ HEAT SHRINKING TUBE
- COLOR: BLACK

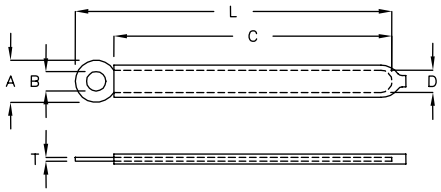

PART NO	A	B	C	D	L	T	PACKAGE
WC−1A	7.6	3.1	27.5	1.6	35.6	0.3	1000
WC−1AM	5.6	2.8	30.1	1.7	35.6	0.6	
WC−1AL	7.6	3.1	27.5	1.6	35.6	0.6	
WC−1	8.0	3.4	33.5	4.0	41.0	0.3	
WC−2	8.0	3.4	48.2	4.0	55.8	0.3	
WC−2A	8.0	3.4	52.5	3.0	60.0	0.3	
WC−3	8.0	4.1	48.2	4.0	56.0	0.3	
WC−3L	8.0	4.1	78.5	4.0	86.0	0.5	
WC−6	8.0	3.4	52.3	3.0	60.0	0.5	

电线固定片 LOCKING CABLE CLAMP 14-5-4

- MATERIAL: SPTE
- ADHESIVE TAPE: 3M

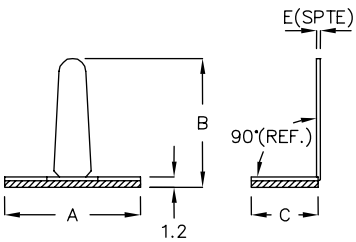

PART NO	A	B	C	E	PACKAGE
JFW−4L	15.1	14.3	7.7	0.4	500

电线固定片 LOCKING CABLE CLAMP 14-6-1

- MATERIAL: SPTE+SPONGE
- ADHESIVE TAPE: 3M

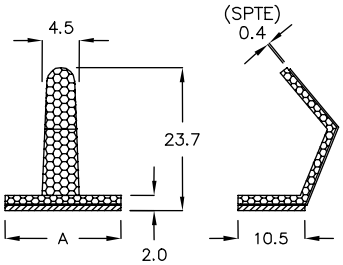

PART NO	A	PACKAGE
JFW-7	18.5	500

接地线夹 GROUNDING CABLE CLAMP 14-6-2

- MATERIAL: SPTE

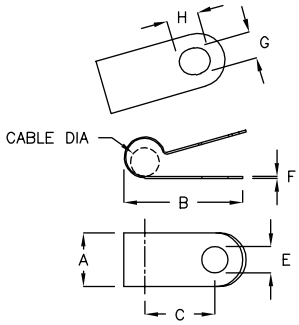

PART NO	A	B	C	E	F	G	H	CABLE DIA	PACKAGE
FN-008	8.5	14.3	8.5	ø4.2	0.3	ø4.2	5.0	ø2.5	500
FN-010	8.6	19.6	11.3	ø4.2	0.6	ø4.2	5.0	ø5.8	
FN-011	8.5	18.7	11.0	ø4.2	0.3	ø4.2	5.0	ø4.8	

接地线夹 GROUNDING CABLE CLAMP 14-6-3

- MATERIAL: SPCC (FN-005,FN-007)
- MATERIAL: STEEL (FN-017)
- PLATING: NICKEL

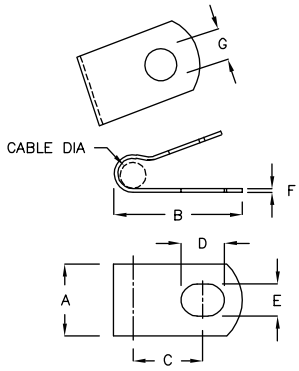

PART NO	A	B	C	D	E	F	G	CABLE DIA	PACKAGE
FN-005	10.1	18.4	10.25	6.0	ø4.5	0.5	ø4.4	ø3.0~ø2.8	500
FN-007	9.8	18.5	10.0	6.0	ø4.5	0.5	ø4.4	ø3.7~ø3.9	
FN-017	8.6	19.8	11.0	6.0	ø4.5	0.3	ø4.5	ø6.4	

接地端子 GROUNDING CONNECTOR 14-6-4

- MATERIAL: PHOSPHOR BRONZE
- PLATING: TIN

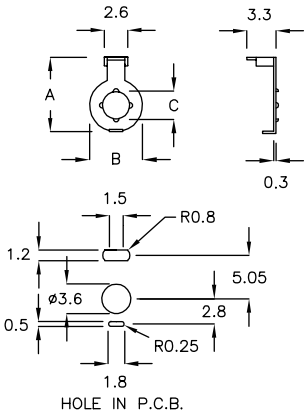

PART NO	A	B	C	PACKAGE
JG-6L	8.5	ø5.9	ø3.1	2000
JG-06A	8.5	ø5.9	ø3.6	

晶体管固定片 TRANSISTOR CLIP 14-7-1

• MATERIAL: SUS301

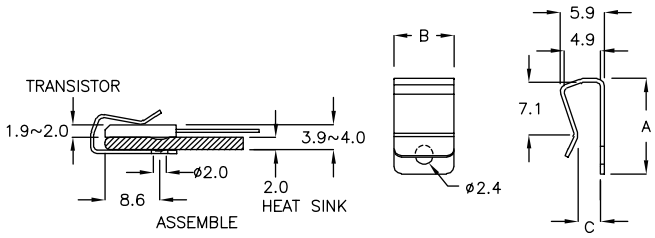

PART NO	A	B	C	PACKAGE
IRK-12H	12.7	8.0	3.0	1000

品基电子（东莞）有限公司

广东省东莞市塘厦镇果岭路1号

No.1, GUO LING RD.,TANG XIA,
DONGGUAN,GUANGDONG, CHINA
TEL: 86-769-87910231
FAX: 86-769-87910232
E-MAIL: pj@pingood.com.cn

苏州品基电子科技有限公司

江苏省苏州市吴中区横泾街道天鹅荡路2986号

SUZHOU FACTORY:
No.2986, TIAN EDANG RD., HENGJING TOWN,
WUZHONG, SUZHOU JIANGSU PROVINCE, CHINA
TEL: 86-512-65629123
FAX: 86-512-65611221
E-MAIL: spj@pingood.com.cn

品固企业股份有限公司

115027 台北市八德路四段768巷1弄8号

No.8, ALLEY 1, LANE 768, SEC 4, PATEH RD.,
TAIPEI, 115027 TAIWAN
TEL: 886-2-27885767
FAX: 886-2-27885768
E-MAIL: sales@pingood.com.tw
http://www.pingood.com.tw

中坜工厂

320023 桃园市中坜区东园路21号

ZHONGLI FACTORY:
No.21, DONGYUAN RD., ZHONGLI DIST.,
TAOYUAN CITY, 320023 TAIWAN

SINGAPORE BRANCH

UNITRONIC COMPONENTS PTE.LTD
TEL: 65-62847555 FAX: 65-62842877

www.pingood.com.tw