CLASSIFICATION:GEAR
STYLE: SPLINE
PRESSURE ANGLE: 20°
TOOTH NUMBER: 11
PITCH DIAMETER: ø 8.8
MODULE: 0.8
OUTSIDE DIAMETER: ø 10.5
AVAILABLE TORQUE: 15^{+15}_{-10} gf-cm (23°C)
THE ROTATION RATE: 15 RPM
* The temperature and R.P.M
will be affected the torque

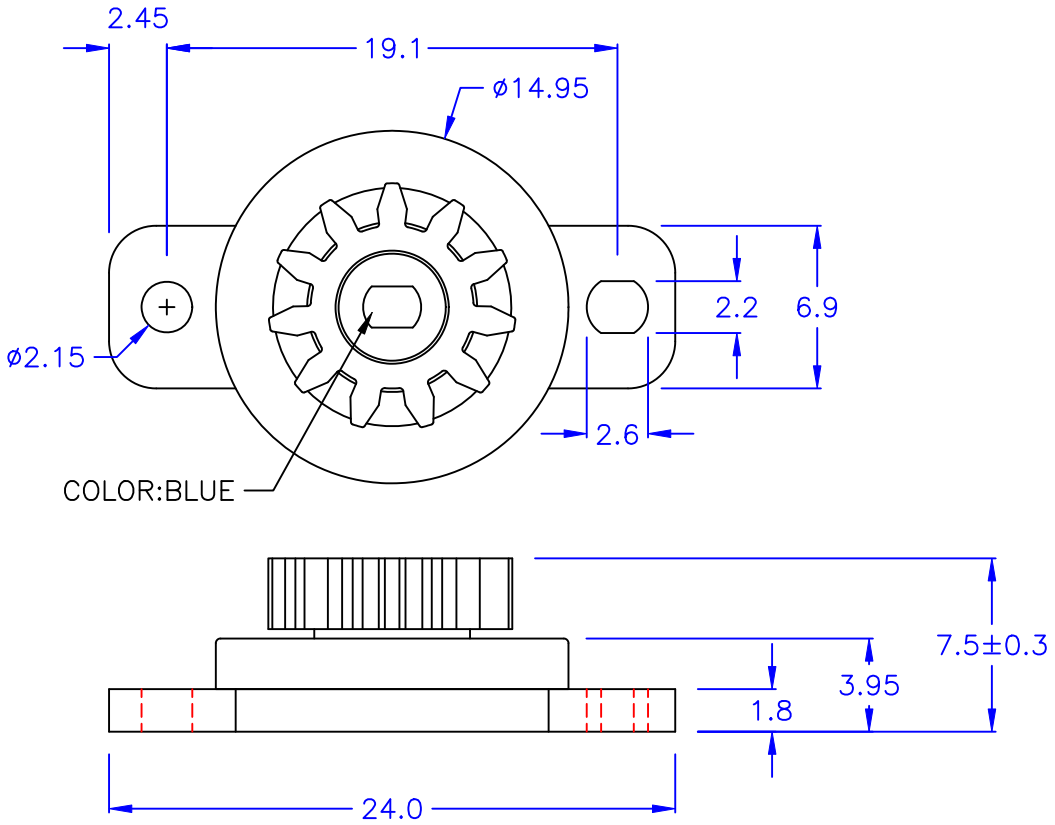

◎Halogen

DRAW NO. PGAS030094	GJS

PLASTIC TOLERANCE:	
L≤10	±0.2
10<L≤30	±0.3
30<L≤50	±0.5
50<L≤100	±0.7
100<L≤250	±1.2
ABOVE 250	±1.5

UNIT	SCALE
mm	

網頁圖示供參考,最終以品固公司正式圖面為主

The plastic tolerance is just for your reference; all the measurements and dimensions are according to the "DATA SHEET" issued by PINGOOD.

品固企業股份有限公司
品基電子(東莞)有限公司
蘇州品基電子科技有限公司
東莞市鑽隆商貿有限公司
PINGOOD ENTERPRISE CO.,LTD.

MATERIAL:
POM 94HB or EQUIVALENT
ABS 94HB or EQUIVALENT

COLOR: BLACK

PART NAME:
ROTARY DAMPER

PART NO:
PG-3AS-15Y

A SIZE

VERSION 1

SHEET 1 OF 1

表單號碼QF135