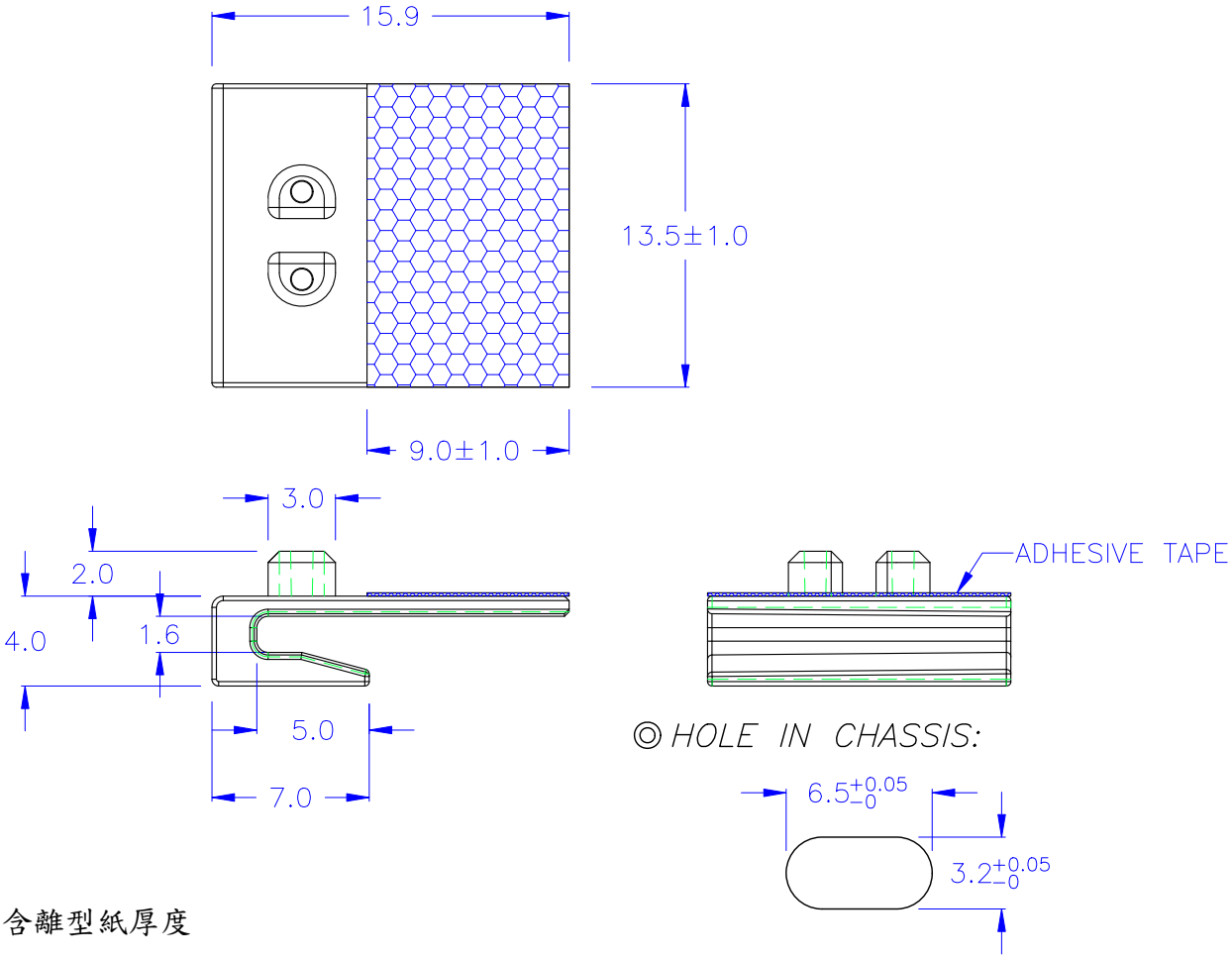

○ 高度不含離型紙厚度

◎Halogen Free 低鹵
◎RoHS Compliant

DRAW NO. PGAS046503	GJS

PLASTIC TOLERANCE:

L≦ 10	±0.2
10<L≦ 30	±0.3
30<L≦ 50	±0.5
50<L≦100	±0.7
100<L≦250	±1.2
ABOVE 250	±1.5

UNIT	SCALE
mm	

網頁圖示供參考,最終以品固公司正式圖面為主

The plastic tolerance is just for your reference; all the measurements and dimensions are according to the "DATA SHEET" issued by PINGOOD.

MATERIAL: PC V2 or EQUIVALENT

COLOR: BLACK

ADHESIVE TAPE: 3M (9448) or EQUIVALENT

THICKNESS OF ADHESIVE TAPE: 0.15mm

品固企業股份有限公司
品基電子(東莞)有限公司
蘇州品基電子科技有限公司
東莞市鈷隆商貿有限公司
鑽隆有限公司
PINGOOD ENTERPRISE CO.,LTD.

PART NAME:
P.C.板間隔柱
SPACER SUPPORT

PART NO:
MWF-13C-ULB

A
SIZE

VERSION