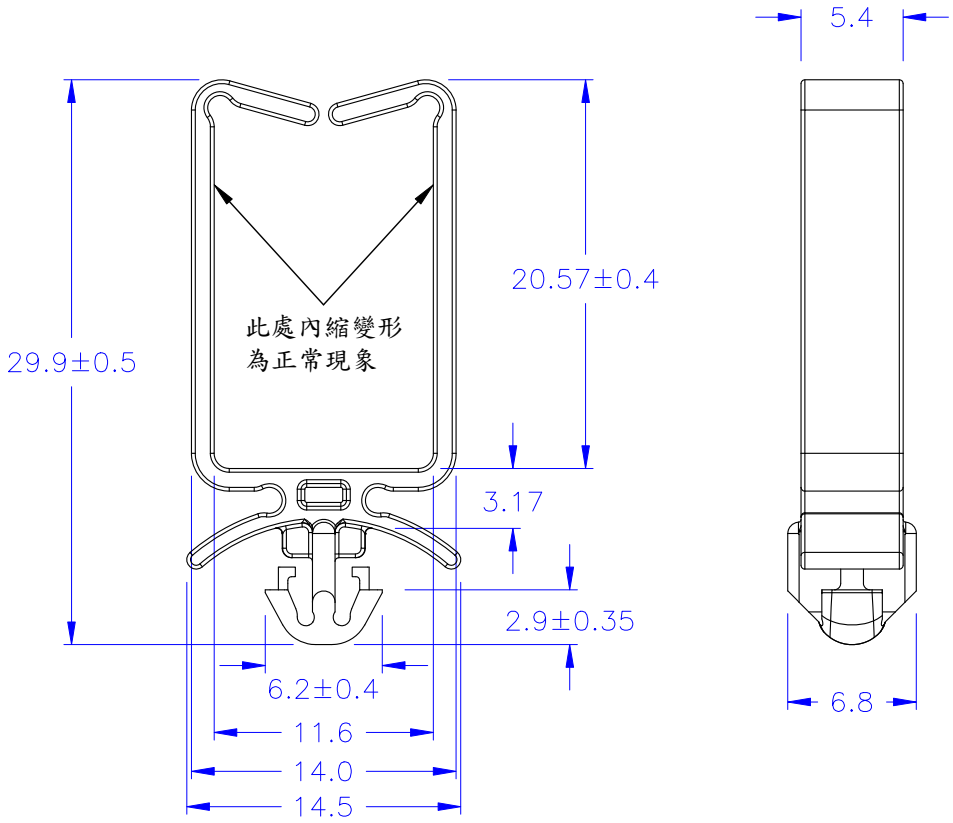

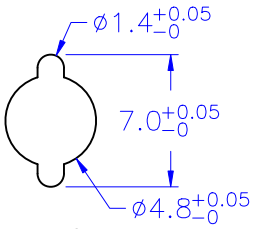

◎ HOLE IN CHASSIS:

◎ CHASSIS THICKNESS: $2.4^{+0}_{-0.05}$ mm

◎Halogen Free 低鹵
◎ROHS 2.0
◎ROHS 六項 compliant

DRAW NO. PGAS037303	GJS

PLASTIC TOLERANCE:

L≦10	±0.2
10<L≦30	±0.3
30<L≦50	±0.5
50<L≦100	±0.7
100<L≦250	±1.2
ABOVE 250	±1.5

UNIT	SCALE
mm	

網頁圖示供參考,最終以品固公司正式圖面為主

The plastic tolerance is just for your reference; all the measurements and dimensions are according to the "DATA SHEET" issued by PINGOOD.

MATERIAL: N66 V2 or EQUIVALENT

COLOR: BLACK

品固企業股份有限公司
品基電子(東莞)有限公司
蘇州品基電子科技有限公司
東莞市鈷隆商貿有限公司
鑽隆有限公司
PINGOOD ENTERPRISE CO.,LTD.

PART NAME: 隔離束線座 WIRE SADDLE

PART NO: CZY-11BH-N2B

SIZE: A

VERSION: 1

SHEET 1 OF 1

表單號碼QF135